# WTC
# Drawing Book 5

# Towers A & B
# Beam Schedules and Types, Stud Details

SKILLING, HELLE & JACKSON — Civil & Structural Engineers

WORLD TRADE CENTER | TITLE DRAWING BOOK 5 | DATE

REVISIONS

WTCI-16-LERA

5-AB1- & 5-B1-
Beam Schedules

5-AB2-
Beam Types
(See 5-AB2-0 for index)

5-AB3-
Stud Details
(See 5-AB3-1 for index)

NOTE See 5-AB0-0 for latest date for each page

LICENSED PROFESSIONAL ENGINEER
LESLIE E. ROBERTSON
NEW YORK

SKILLING, HELLE, CHRISTIANSEN, ROBERTSON — Structural & Civil Engineers

PROJECT THE WORLD TRADE CENTER | TITLE DRAWING BOOK 5 - BEAM SCHEDULE & TYPES | DATE 10/ 6/72

REVISIONS

PRINTED 5/18-73

| | | | | | | | | | |
|---|---|---|---|---|---|---|---|---|---|
| 5-AB0- 0 | 5/18/73 | 5-AB1- 48 | 1/22/68 | 5-AB1- 98 | 1/22/68 | 5-AB1-148 | 1/22/68 | 5-AB1-198 | 12/ 6/68 |
| 5-AB0- 0.1 | 5/18/73 | 5-AB1- 49 | 1/22/68 | 5-AB1- 99 | 1/22/68 | 5-AB1-149 | 12/21/67 | 5-AB1-199 | 2/ 9/68 |
| 5-AB1- 0 | 11/ 9/67 | 5-AB1- 50 | 1/22/68 | 5-AB1-100 | 1/22/68 | 5-AB1-150 | 12/ 6/68 | 5-AB1-200 | 12/ 6/68 |
| 5-AB1- 1 | 1/22/68 | 5-AB1- 51 | 11/22/68 | 5-AB1-101 | 7/20/67 | 5-AB1-151 | 10/22/68 | 5-AB1-201 | 12/ 6/68 |
| 5-AB1- 2 | 1/22/68 | 5-AB1- 52 | 1/22/68 | 5-AB1-102 | 1/22/68 | 5-AB1-152 | 1/10/69 | 5-AB1-202 | 12/ 6/68 |
| 5-AB1- 3 | 7/17/68 | 5-AB1- 53 | 1/22/68 | 5-AB1-103 | 1/22/68 | 5-AB1-153 | 1/22/68 | 5-AB1-203 | 7/17/68 |
| 5-AB1- 4 | 7/17/68 | 5-AB1- 54 | 1/22/68 | 5-AB1-104 | 2/21/68 | 5-AB1-154 | 12/ 6/68 | 5-AB1-204 | 7/17/68 |
| 5-AB1- 5 | 10/ 9/68 | 5-AB1- 55 | 1/22/68 | 5-AB1-105 | 9/25/68 | 5-AB1-155 | 12/ 6/68 | 5-AB1-205 | 7/17/68 |
| 5-AB1- 6 | 1/22/68 | 5-AB1- 56 | 7/17/68 | 5-AB1-106 | 1/22/68 | 5-AB1-156 | 1/22/68 | 5-AB1-206 | 3/11/68 |
| 5-AB1- 7 | 11/21/67 | 5-AB1- 57 | 7/17/68 | 5-AB1-107 | 2/21/68 | 5-AB1-157 | 9/15/67 | 5-AB1-207 | 8/17/68 |
| 5-AB1- 8 | 1/22/68 | 5-AB1- 58 | 3/13/68 | 5-AB1-108 | 9/25/68 | 5-AB1-158 | 1/22/68 | 5-AB1-208 | 10/18/68 |
| 5-AB1- 9 | 10/ 9/68 | 5-AB1- 59 | 7/11/69 | 5-AB1-109 | 9/25/68 | 5-AB1-159 | 12/ 6/68 | 5-AB1-209 | 11/27/68 |
| 5-AB1- 10 | 1/22/68 | 5-AB1- 60 | 7/17/68 | 5-AB1-110 | 3/29/68 | 5-AB1-160 | 10/22/68 | 5-AB1-210 | 9/27/68 |
| 5-AB1- 11 | 1/22/68 | 5-AB1- 61 | 8/15/69 | 5-AB1-111 | 11/22/68 | 5-AB1-161 | 7/17/68 | 5-AB1-211 | 1/22/68 |
| 5-AB1- 12 | 1/22/68 | 5-AB1- 62 | 8/15/69 | 5-AB1-112 | 9/27/68 | 5-AB1-162 | 1/10/69 | 5-AB1-212 | 1/22/68 |
| 5-AB1- 13 | 12/ 6/68 | 5-AB1- 63 | 9/30/69 | 5-AB1-113 | 1/22/68 | 5-AB1-163 | 11/22/68 | 5-AB1-213 | 1/22/68 |
| 5-AB1- 14 | 12/ 6/68 | 5-AB1- 64 | 1/22/68 | 5-AB1-114 | 12/ 6/68 | 5-AB1-164 | 1/22/68 | 5-AB1-214 | 1/22/68 |
| 5-AB1- 15 | 1/22/68 | 5-AB1- 65 | 8/15/69 | 5-AB1-115 | 1/22/68 | 5-AB1-165 | 1/24/68 | 5-AB1-215 | 1/22/68 |
| 5-AB1- 16 | 1/22/68 | 5-AB1- 66 | 1/22/68 | 5-AB1-116 | 12/ 6/68 | 5-AB1-166 | 11/22/68 | 5-AB1-216 | 1/22/68 |
| 5-AB1- 17 | 8/17/68 | 5-AB1- 67 | 8/15/69 | 5-AB1-117 | 1/22/68 | 5-AB1-167 | 12/ 6/68 | 5-AB1-217 | 1/22/68 |
| 5-AB1- 18 | 10/ 7/68 | 5-AB1- 68 | 8/15/69 | 5-AB1-118 | 10/ 7/68 | 5-AB1-168 | 1/22/68 | 5-AB1-218 | 12/ 6/68 |
| 5-AB1- 19 | 12/ 6/68 | 5-AB1- 69 | 8/15/69 | 5-AB1-119 | 1/10/69 | 5-AB1-169 | 12/ 6/68 | 5-AB1-219 | 7/17/68 |
| 5-AB1- 20 | 7/17/68 | 5-AB1- 70 | 10/ 9/68 | 5-AB1-120 | 1/10/69 | 5-AB1-170 | 10/18/68 | 5-AB1-220 | 9/18/68 |
| 5-AB1- 21 | 12/ 6/68 | 5-AB1- 71 | 9/30/69 | 5-AB1-121 | 1/22/68 | 5-AB1-171 | 12/ 6/68 | 5-AB1-221 | 10/18/68 |
| 5-AB1- 22 | 12/ 6/68 | 5-AB1- 72 | 9/30/69 | 5-AB1-122 | 1/22/68 | 5-AB1-172 | 12/ 6/68 | 5-AB1-222 | 10/18/72 |
| 5-AB1- 23 | 1/22/68 | 5-AB1- 73 | 7/11/69 | 5-AB1-123 | 7/11/69 | 5-AB1-173 | 12/ 6/68 | * 5-AB1-227 | 10/18/68 |
| 5-AB1- 24 | 1/22/68 | 5-AB1- 74 | 1/22/68 | 5-AB1-124 | 1/22/68 | 5-AB1-174 | 12/ 6/68 | 5-AB1-241 | 11/27/68 |
| 5-AB1- 25 | 1/22/68 | 5-AB1- 75 | 1/22/68 | 5-AB1-125 | 2/12/68 | 5-AB1-175 | 7/17/68 | 5-AB1-242 | 1/10/69 |
| 5-AB1- 26 | 1/22/68 | 5-AB1- 76 | 1/22/68 | 5-AB1-126 | 1/22/68 | 5-AB1-176 | 1/22/68 | 5-AB1-243 | 9/30/69 |
| 5-AB1- 27 | 4/17/68 | 5-AB1- 77 | 7/17/68 | 5-AB1-127 | 1/22/68 | 5-AB1-177 | 7/17/68 | | |
| 5-AB1- 28 | 1/10/69 | 5-AB1- 78 | 12/ 6/68 | 5-AB1-128 | 2/12/68 | 5-AB1-178 | 7/17/68 | | |
| 5-AB1- 29 | 4/17/68 | 5-AB1- 79 | 7/11/69 | 5-AB1-129 | 2/12/68 | 5-AB1-179 | 7/17/68 | | |
| 5-AB1- 30 | 4/17/68 | 5-AB1- 80 | 1/22/68 | 5-AB1-130 | 1/22/68 | 5-AB1-180 | 7/20/67 | | |
| 5-AB1- 31 | 1/22/68 | 5-AB1- 81 | 1/22/68 | 5-AB1-131 | 3/13/68 | 5-AB1-181 | 12/ 6/68 | | |
| 5-AB1- 32 | 9/25/68 | 5-AB1- 82 | 1/22/68 | 5-AB1-132 | 1/22/68 | 5-AB1-182 | 12/ 6/68 | | |
| 5-AB1- 33 | 4/17/68 | 5-AB1- 83 | 1/22/68 | 5-AB1-133 | 7/17/68 | 5-AB1-183 | 12/ 6/68 | | |
| 5-AB1- 34 | 3/29/68 | 5-AB1- 84 | 1/22/68 | 5-AB1-134 | 7/17/68 | 5-AB1-184 | 12/ 6/68 | | |
| 5-AB1- 35 | 1/10/69 | 5-AB1- 85 | 1/22/68 | 5-AB1-135 | 1/22/68 | 5-AB1-185 | 3/11/68 | | |
| 5-AB1- 36 | 1/10/69 | 5-AB1- 86 | 12/ 6/68 | 5-AB1-136 | 11/17/67 | 5-AB1-186 | 12/ 6/68 | | |
| 5-AB1- 37 | 1/24/68 | 5-AB1- 87 | 1/22/68 | 5-AB1-137 | 7/17/68 | 5-AB1-187 | 3/11/68 | | |
| 5-AB1- 38 | 12/ 6/68 | 5-AB1- 88 | 1/22/68 | 5-AB1-138 | 1/24/68 | 5-AB1-188 | 12/ 6/68 | | |
| 5-AB1- 39 | 12/ 6/68 | 5-AB1- 89 | 7/17/68 | 5-AB1-139 | 1/24/68 | 5-AB1-189 | 12/ 6/68 | | |
| 5-AB1- 40 | 1/24/68 | 5-AB1- 90 | 9/30/69 | 5-AB1-140 | 11/22/68 | 5-AB1-190 | 12/ 6/68 | | |
| 5-AB1- 41 | 1/22/68 | 5-AB1- 91 | 1/22/68 | 5-AB1-141 | 12/ 6/68 | 5-AB1-191 | 12/ 6/68 | | |
| 5-AB1- 42 | 1/22/68 | 5-AB1- 92 | 8/15/69 | 5-AB1-142 | 1/24/68 | 5-AB1-192 | 12/ 6/68 | | |
| 5-AB1- 43 | 1/22/68 | 5-AB1- 93 | 1/22/68 | 5-AB1-143 | 2/29/68 | 5-AB1-193 | 12/ 6/68 | | |
| 5-AB1- 44 | 1/24/68 | 5-AB1- 94 | 7/17/68 | 5-AB1-144 | 9/25/69 | 5-AB1-194 | 12/ 6/68 | | |
| 5-AB1- 45 | 1/22/68 | 5-AB1- 95 | 1/22/68 | 5-AB1-145 | 9/25/68 | 5-AB1-195 | 12/ 6/68 | | |
| 5-AB1- 46 | 11/27/68 | 5-AB1- 96 | 1/22/68 | 5-AB1-146 | 1/22/68 | 5-AB1-196 | 12/ 6/68 | | |
| 5-AB1- 47 | 1/22/68 | 5-AB1- 97 | 1/22/68 | 5-AB1-147 | 1/22/68 | 5-AB1-197 | 12/ 6/68 | | |

* = NO RECORD

LICENSED PROFESSIONAL ENGINEER LESLIE E. ROBERTSON 34360 STATE OF NEW YORK

5-AB0-0

SKILLING, HELLE, CHRISTIANSEN, ROBERTSON — STRUCTURAL & CIVIL ENGINEERS

| PROJECT | THE WORLD TRADE CENTER | TITLE | DRAWING BOOK 5 - BEAM SCHEDULE & TYPES | DATE | 10/ 6/72 |
|---|---|---|---|---|---|

REVISIONS

PRINTED 5/18/73

| | | | |
|---|---|---|---|
| 5-AB2- 1 | 5/ 1/69 | | |
| 5-AB2- 2 | 11/21/67 | 5-AB3- 1 | 5/ 1/69 |
| 5-AB2- 2.1 | 10/15/67 | 5-AB3- 2 | 12/ 6/68 |
| 5-AB2- 3 | HOLD | 5-AB3- 3 | 12/21/67 |
| 5-AB2- 4 | 12/21/67 | 5-AB3- 4 | 11/ 9/67 |
| 5-AB2- 5 | HOLD | 5-AB3- 5 | 12/21/67 |
| 5-AB2- 6 | 7/17/68 | | |
| 5-AB2- 7 | 11/15/67 | | |
| 5-AB2- 8 | HOLD | | |
| 5-AB2- 9 | 10/31/67 | | |
| 5-AB2-10 | 11/21/67 | | |
| 5-AB2-11 | 11/21/67 | | |
| 5-AB2-11.1 | 1/10/69 | | |
| 5-AB2-12 | 11/21/67 | | |
| 5-AB2-12.1 | 12/21/67 | | |
| 5-AB2-12.2 | 11/21/67 | | |
| 5-AB2-12.3 | 11/22/68 | | |
| 5-AB2-12.4 | 11/21/67 | | |
| 5-AB2-12.5 | 11/21/67 | | |
| 5-AB2-12.6 | 11/21/67 | | |
| 5-AB2-13 | 12/21/67 | | |
| 5-AB2-14 | 11/21/67 | | |
| 5-AB2-15 | 11/10/67 | | |
| 5-AB2-16 | 11/21/67 | | |
| 5-AB2-17 | 11/21/67 | | |
| 5-AB2-18 | 11/21/67 | | |
| 5-AB2-19 | 11/21/67 | | |
| 5-AB2-20 | 9/15/67 | | |
| 5-AB2-21 | 11/21/67 | | |
| 5-AB2-22 | 11/22/67 | | |
| 5-AB2-23 | 7/17/68 | | |
| 5-AB2-24 | 11/17/67 | | |
| 5-AB2-25 | 12/21/67 | | |
| 5-AB2-26 | 10/31/67 | | |
| 5-AB2-27 | 7/14/67 | | |
| 5-AB2-28 | 12/21/67 | | |
| 5-AB2-29 | 12/21/67 | | |
| 5-AB2-30 | 12/21/67 | | |
| 5-AB2-31 | 3/29/68 | | |
| 5-AB2-32 | 12/21/67 | | |
| 5-AB2-33 | 12/21/67 | | |
| 5-AB2-34 | 11/21/67 | | |
| 5-AB2-35 | 11/21/67 | | |
| 5-AB2-36 | 11/21/67 | | |
| 5-AB2-37 | 11/21/67 | | |
| 5-AB2-38 | 9/25/68 | | |
| 5-AB2-39 | 5/ 7/68 | | |
| 5-AB2-40 | 9/25/68 | | |

LICENSED PROFESSIONAL ENGINEER — LESLIE E ROBERTSON — NO. 34360 — CITY OF THE STATE OF NEW YORK

**SKILLING-HELLE-CHRISTIANSEN-ROBERTSON** — **Civil & Structural Engineers**

| PROJECT | TITLE | DATE |
|---|---|---|
| THE WORLD TRADE CENTER | BEAM SCHEDULE TOWERS A AND B | 11/ 9/67 |

REVISIONS

| BEAM NO. | SIZE | TYPE | FY | SHAPE | PLATE 1 WIDTH | PLATE 1 THICK | PLATE 2 WIDTH | PLATE 2 THICK | DIMENSIONS LENGTH | DIMENSIONS DIM. A | SUPPORTS LEFT | SUPPORTS RIGHT | STUDS NO. | STUDS SIZE | REMARKS |
|---|---|---|---|---|---|---|---|---|---|---|---|---|---|---|---|
| (1) | (2) | (3) | (4) | (5) | (6) | (7) | (8) | (9) | (10) | (11) | (12) | (13) | (14) | (15) | (16) |

(1) BEAM IDENTIFICATION NUMBER, SHOWN ON FRAMING PLAN
(2) NOMINAL DIMENSIONS OF BEAM IF NOT STANDARD ROLLED SHAPE
(3) BEAM TYPE, SEE 5-AB2
(4) REQUIRED YIELD STRENGTH OF STEEL
(5) DISIGNATION OF ROLLED SHAPE, WHERE APPLICABLE
(6) WIDTH OF FLANGE OF BUILT UP BEAM, OR WIDTH OF COVER PLATE ON ROLLED SECTION. SEE BEAM TYPE
(7) THICKNESS OF FLANGE OF BUILT UP BEAM OR THICKNESS OF COVER PLATE ON ROLLED SECTION. SEE BEAM TYPE
(8) DEPTH OF WEB PLATE(S) OF BUILT UP SECTION
(9) THICKNESS OF WEB PLATE(S) OF BUILT UP SECTION
(10) LENGTH OF COVER PLATE(S)
(11) DISTANCE FROM LEFT END OF BEAM TO LEFT END OF COVER PLATE
(12) SUPPORT DETAIL LEFT END OF BEAM. GIVEN AS SUPPORT DETAIL NUMBER OR AS REACTION IN KIPS FOR STANDARD AISC CONNECTION. FOR DETAILS SEE 6-AB1 AND 6-AB2
(13) SAME AS (12) BUT FOR RIGHT END OF BEAM
(14) NUMBER OF SHEAR CONNECTORS ON BEAM
(15) SIZE OF SHEAR CONNECTORS (DIAM. X LENGTH) AND PLACEMENT DETAILS (SEE 5-AB3)
(16) REMARKS. NUMBERS REFER TO NOTES AT FOOT OF PAGE

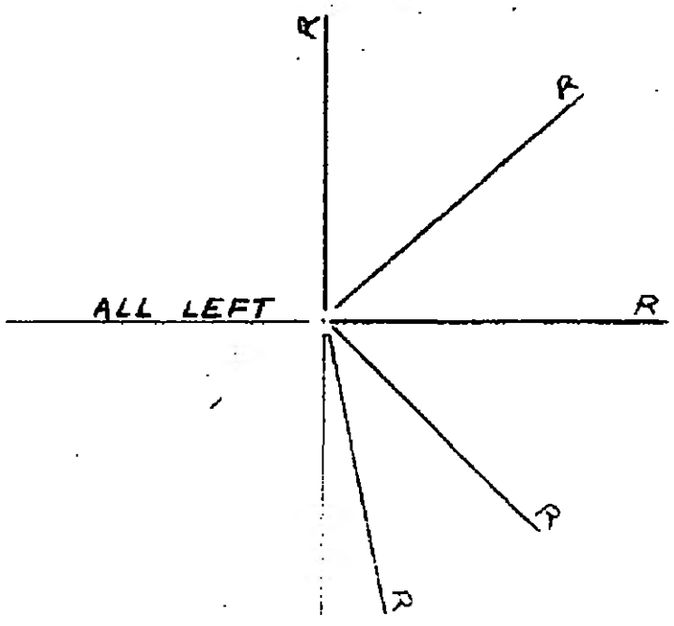


CONVENTION FOR DETERMINING LEFT AND RIGHT ENDS OF BEAMS

(1) ALL BEAMS EXCEPT THOSE ON VERTICAL AXIS OF SHEET HAVE THE END NEAREST TO THE LEFT SIDE OF THE SHEET DESIGNATED AS LEFT

(2) ALL BEAMS ON VERTICAL AXIS HAVE THE END NEAREST TO THE BOTTOM OF THE SHEET DESIGNATED AS LEFT.

LICENSED PROFESSIONAL ENGINEER
LESLIE E. ROBERTSON
No. 34360
UNIVERSITY OF THE STATE OF NEW YORK

**SKILLING-HELLE-CHRISTIANSEN-ROBERTSON** — **Civil & Structural Engineers**

| PROJECT | TITLE | DATE |
|---|---|---|
| THE WORLD TRADE CENTER | BEAM SCHEDULE TOWERS A AND B | 1/22/68 |

REVISIONS

| BEAM NO. | SIZE | TYPE | FY | SHAPE | PLATE 1 WIDTH | PLATE 1 THICK | PLATE 2 WIDTH | PLATE 2 THICK | DIMENSIONS LENGTH | DIMENSIONS DIM. A | SUPPORTS LEFT | SUPPORTS RIGHT | STUDS NO. | STUDS SIZE | REMARKS |
|---|---|---|---|---|---|---|---|---|---|---|---|---|---|---|---|
| 2 | - | 100 | 36 | 14B22 | - | - | - | - | - | - | 26.5K | 26.5K | 19 | 3/4X3 | |
| 3 | - | 100 | 36 | 14B22 | - | - | - | - | - | - | 26.5K | 26.5K | 19 | 3/4X3 | |
| 4 | - | 100 | 36 | 14B22 | - | - | - | - | - | - | 26.5K | 26.5K | 19 | 3/4X3 | |
| 5 | - | 100 | 36 | 14B22 | - | - | - | - | - | - | 26.5K | 26.5K | 19 | 3/4X3 | |
| 6 | - | 100 | 36 | 12B19 | - | - | - | - | - | - | 26.5K | 26.5K | 36 | 5/8X2 | |
| 7 | - | 100 | 36 | 12B19 | - | - | - | - | - | - | 26.5K | 26.5K | - | - | |
| 8 | - | 100 | 36 | 12B19 | - | - | - | - | - | - | 26.5K | 26.5K | - | - | |
| 9 | - | 100 | 36 | 12B19 | - | - | - | - | - | - | 105A | 26.5K | - | - | |
| 10 | - | 100 | 36 | 14B26 | - | - | - | - | - | - | 283M | 172B | - | - | |
| 11 | - | 100 | 36 | 14B22 | - | - | - | - | - | - | 105A | 26.5K | 19 | 3/4X3 | |
| 12 | - | 100 | 36 | 14B26 | - | - | - | - | - | - | 283M | 170C | 18 | 3/4X3 | |
| 13 | - | 100 | 36 | 8B13 | - | - | - | - | - | - | 17.4K | 17.4K | 16 | 5/8X2 | |
| 14 | - | 100 | 36 | 8B13 | - | - | - | - | - | - | 17.4K | 17.4K | 8 | 3/4X3 | |
| 15 | - | 100 | 36 | 8B13 | - | - | - | - | - | - | 17.4K | 17.4K | 8 | 3/4X3 | |
| 16 | - | 100 | 36 | 8B13 | - | - | - | - | - | - | 17.4K | 17.4K | 8 | 3/4X3 | |
| 17 | - | 100 | 36 | 8B13 | - | - | - | - | - | - | 17.4K | 17.4K | 8 | 3/4X3 | |
| 18 | 16X4 BX | 200 | 36 | - | 2-1/2 | 3/8 | 16 | 3/4 | - | - | 296A | 274A | - | - | |
| 19 | - | 100 | 36 | 16B26 | - | - | - | - | - | - | 201A | 283M | 8 | 3/4X3 | |
| 20 | - | 100 | 36 | 16B26 | - | - | - | - | - | - | 105I | 213A | 17 | 3/4X3 | |
| 21 | - | 100 | 36 | 8B13 | - | - | - | - | - | - | 17.4K | 17.4K | 11 | 3/4X3 | |
| 22 | - | 100 | 36 | 8B13 | - | - | - | - | - | - | 17.4K | 17.4K | - | - | |
| 23 | 16X4 8X | 200 | 36 | - | 2-1/2 | 3/8 | 16 | 3/4 | - | - | 372A | 282A | - | - | |
| 24 | - | 404 | 36 | 16WF50 | - | - | - | - | - | 10FT 9 | 338D | 274A | 26 | 3/4X3 | |
| 25 | - | 404 | 36 | 16WF50 | - | - | - | - | - | 7FT 6 | 274A | 282A | 26 | 3/4X3 | |
| 26 | - | 404 | 36 | 16WF50 | - | - | - | - | - | 8FT 0 | 26.5K | 274A | 26 | 3/4X3 | |
| 27 | - | 404 | 36 | 16WF45 | - | - | - | - | - | - | 338D | 274B | 26 | 3/4X3 | |
| 28 | - | 404 | 50 | 16WF45 | - | - | - | - | - | 7FT 6 | 274A | 338D | 26 | 3/4X3 | |
| 29 | - | 100 | 50 | 16WF40 | - | - | - | - | - | - | 106A | 111I | 39 | 3/4X3 | |
| 30 | - | 404 | 50 | 16WF45 | - | - | - | - | - | - | 338D | 274A | 26 | 3/4X3 | |
| 31 | - | 100 | 36 | 12B19 | - | - | - | - | - | - | 26.5K | 26.5K | 36 | 5/8X2 | |
| 32 | - | 100 | 50 | 16WF36 | - | - | - | - | - | - | 106B | 111I | 39 | 3/4X3 | |
| 33 | - | 404 | 36 | 16WF45 | - | - | - | - | - | - | 213A | 282A | 26 | 3/4X3 | |

LICENSED PROFESSIONAL ENGINEER LESLIE E. ROBERTSON No. 34360 GOVERNMENT OF THE STATE OF N.Y.

**SKILLING-HELLE-CHRISTIANSEN-ROBERTSON** — **Civil & Structural Engineers**

PROJECT: THE WORLD TRADE CENTER | TITLE: BEAM SCHEDULE TOWERS A AND B | DATE: 1/22/68

REVISIONS

| BEAM NO. | SIZE | TYPE | FY | SHAPE | PLATE 1 WIDTH | PLATE 1 THICK | PLATE 2 WIDTH | PLATE 2 THICK | DIMENSIONS LENGTH | DIMENSIONS DIM. A | SUPPORTS LEFT | SUPPORTS RIGHT | STUDS NO. | STUDS SIZE | REMARKS |
|---|---|---|---|---|---|---|---|---|---|---|---|---|---|---|---|
| 34 | - | 100 | 36 | 16B31 | - | - | - | - | - | - | 26.5K | 169B | 18 | 3/4X3D | |
| 35 | - | 100 | 36 | 16WF36 | - | - | - | - | - | - | 26.5K | 26.5K | - | - | |
| 36 | - | 100 | 36 | 16WF36 | - | - | - | - | - | - | 220I | 208C | 39 | 3/4X3D | |
| 37 | - | 100 | 36 | 16WF36 | - | - | - | - | - | - | 208C | 287E | 45 | 3/4X3D | |
| 38 | - | 100 | 36 | 16WF36 | - | - | - | - | - | - | 287E | 208D | 39 | 3/4X3 | |
| 39 | - | 100 | 36 | 16WF36 | - | - | - | - | - | - | 208D | 208C | (8) | 3/4X3 | X |
| 40 | - | 100 | 36 | 16WF36 | - | - | - | - | - | - | 208C | 208C | 39 | 3/4X3D | |
| 41 | - | 100 | 36 | 16WF36 | - | - | - | - | - | - | 208C | 220I | 39 | 3/4X3J | |
| 42 | - | 100 | 36 | 16WF36 | - | - | - | - | - | - | 208C | 172B | 39 | 3/4X3J | |
| 43 | - | 100 | 50 | 16WF36 | - | - | - | - | - | - | 106A | 1111 | 39 | 3/4X3D | |
| 44 | - | 100 | 36 | 16WF36 | - | - | - | - | - | - | 220I | 208C | 39 | 3/4X3J | |
| 45 | - | 100 | 36 | 16WF45 | - | - | - | - | - | - | 16.8K | 213A | 26 | 3/4X3 | |
| 46 | - | 100 | 50 | 16WF36 | - | - | - | - | - | - | 106A | 1111 | 39 | 3/4X3 | |
| 47 | - | 100 | 36 | 16WF36 | - | - | - | - | - | - | 208D | 26.5K | 8 | 3/4X3 | |
| 48 | - | 100 | 36 | 8B13 | - | - | - | - | - | - | 17.4K | 17.4K | (8) | 3/4X3 | |
| 49 | - | 100 | 36 | 14B22 | - | - | - | - | - | - | 26.5K | 26.5K | 19 | 3/4X3 | |
| 50 | - | 100 | 36 | 15CH33.9 | - | - | - | - | - | - | 315A | 315D | - | - | |
| 51 | - | 100 | 36 | 12BI6.5 | - | - | - | - | - | - | 26.5K | 26.5K | 15 | 3/4X3 | |
| 52 | - | 100 | 36 | 12B16.5 | - | - | - | - | - | - | 26.5K | 26.5K | 18 | 3/4X3 | |
| 53 | - | 100 | 36 | 8B13 | - | - | - | - | - | - | 17.4K | 17.4K | 11 | 3/4X3 | |
| 54 | - | 100 | 36 | 15CH33.9 | - | - | - | - | - | - | 315A | 315D | - | - | |
| 55 | - | 100 | 36 | 10B15 | - | - | - | - | - | - | 17.4K | 17.4K | 12 | 3/4X3 | |
| 56 | - | 100 | 36 | 16WF36 | - | - | - | - | - | - | 26.5K | 208C | 15 | 3/4X3B | |
| 57 | - | 100 | 36 | 16WF36 | - | - | - | - | - | - | 170B | 287E | 15 | 3/4X3B | |
| 58 | - | 100 | 36 | 16WF36 | - | - | - | - | - | - | 26.5K | 208C | 12 | 3/4X3B | |
| 59 | - | 100 | 36 | 16WF36 | - | - | - | - | - | - | 26.5K | 208C | 12 | 3/4X3B | |
| 60 | - | 100 | 36 | 12B19 | - | - | - | - | - | - | 335B | 235D | 15 | 3/4X3 | |
| 61 | - | 100 | 36 | 12B19 | - | - | - | - | - | - | 335B | 235C | 15 | 3/4X3 | |
| 62 | - | 100 | 36 | 16WF36 | - | - | - | - | - | - | 307C | 208D | 19 | 3/4X3B | |
| 63 | - | 100 | 36 | 14B22 | - | - | - | - | - | - | 335C | 26.5K | 19 | 3/4X3 | |
| 64 | - | 100 | 36 | 8B13 | - | - | - | - | - | - | 105D | 105D | 11 | 3/4X3 | |
| 65 | - | 100 | 36 | 14B22 | - | - | - | - | - | - | 26.5K | 208B | 19 | 3/4X3 | |
| 66 | - | 600 | 36 | 6BX15.4 | - | - | - | - | - | - | 451 | 451 | - | - | 1 |

REMARKS

1 STANDARD STRUCTURAL TUBING 6X4X1/4

LICENSED PROFESSIONAL ENGINEER — LESLIE E. ROBERTSON — No. 34360 — UNIVERSITY OF THE STATE OF NEW YORK

PROJECT: THE WORLD TRADE CENTER | TITLE: BEAM SCHEDULE TOWERS A AND B | DATE: 7/17/68

REVISIONS

| BEAM NO. | SIZE | TYPE | FY | SHAPE | PLATE 1 WIDTH | PLATE 1 THICK | PLATE 2 WIDTH | PLATE 2 THICK | DIMENSIONS LENGTH | DIMENSIONS DIM. A | SUPPORTS LEFT | SUPPORTS RIGHT | STUDS NO. | STUDS SIZE | REMARKS |
|---|---|---|---|---|---|---|---|---|---|---|---|---|---|---|---|
| 67 | - | 600 | 36 | 68X15.4 | - | - | - | - | - | - | 451 | 451 | - | - | 1 |
| 68 | - | 600 | 36 | 68X15.4 | - | - | - | - | - | - | 451 | 451 | - | - | 1 |
| 69 | - | 100 | 36 | 14B22 | - | - | - | - | - | - | 208B | 216A | 10 | 3/4X3 | |
| 70 | - | 100 | 36 | 14B22 | - | - | - | - | - | - | 208B | 335C | 19 | 3/4X3 | |
| 71 | - | 100 | 36 | 14B22 | - | - | - | - | - | - | 216A | 335C | 24 | 3/4X3 | |
| 72 | - | 100 | 36 | 12B19 | - | - | - | - | - | - | 235C | 335B | 15 | 3/4X3 | |
| 73 | - | 100 | 36 | 8B13 | - | - | - | - | - | - | 175A | 17.4K | - | - | |
| 74 | - | 100 | 36 | 8B13 | - | - | - | - | - | - | 111N | 105C | - | - | |
| 75 | - | 100 | 36 | 8B13 | - | - | - | - | - | - | 214A | 111K | 8 | 3/4X3 | |
| 76 | - | 100 | 36 | 12B16.5 | - | - | - | - | - | - | 26.5K | 26.5K | 15 | 3/4X3 | |
| 77 | - | 100 | 36 | 12B16.5 | - | - | - | - | - | - | 310B | 26.5K | 21 | 3/4X3 | |
| 78 | - | 100 | 36 | 16WF40 | - | - | - | - | - | - | 220K | 205F | - | - | |
| 79 | - | 100 | 36 | 16WF40 | - | - | - | - | - | - | 401A | 401A | - | - | |
| 80 | - | 100 | 36 | 16WF40 | - | - | - | - | - | - | 205F | 335C | - | - | 2 |
| 81 | - | 100 | 36 | 16WF40 | - | - | - | - | - | - | 335C | 205F | - | - | 3 |
| 82 | - | 100 | 36 | 16WF40 | - | - | - | - | - | - | 401A | 401A | - | - | |
| 83 | - | 100 | 36 | 16WF40 | - | - | - | - | - | - | 205F | 220K | - | - | |
| 84 | - | 100 | 36 | 16B31 | - | - | - | - | - | - | 220D | 254C | - | - | (6) |
| 85 | - | 100 | 36 | 16B31 | - | - | - | - | - | - | 254C | 254C | - | - | |
| 86 | - | 100 | 36 | 16B31 | - | - | - | - | - | - | 254C | 335B | - | - | 4 |
| 87 | - | 100 | 36 | 16B31 | - | - | - | - | - | - | 335B | 254C | - | - | 5 |
| 88 | - | 100 | 36 | 16B31 | - | - | - | - | - | - | 254C | 254C | - | - | |
| 89 | - | 100 | 36 | 16B31 | - | - | - | - | - | - | 254C | 220D | - | - | |
| 90 | 16X5-1/2BX | 204 | 36 | - | 4 | 3/8 | 16 | 3/4 | - | - | 206A | 254C | - | - | |
| 91 | 16X5-1/2BX | 204 | 36 | - | 4 | 3/8 | 16 | 3/4 | | | 450 | 450 | - | - | |
| 92 | 16X5-1/2BX | 201 | 36 | - | 4 | 3/8 | 16 | 3/4 | - | - | 254B | 206B | - | - | |
| 93 | 16X5-1/2BX | 201 | 36 | - | 4 | 3/8 | 16 | 3/4 | - | - | 450 | 450 | - | - | |
| 94 | - | 100 | 36 | 14B22 | - | - | - | - | - | - | 26.5K | 26.5K | - | - | |
| 95 | - | 100 | 36 | 8B13 | - | - | - | - | - | - | 17.4K | 17.4K | - | - | |
| 96 | - | 100 | 36 | 16WF40 | - | - | - | - | - | - | 220I | 205F | - | - | |
| 97 | - | 100 | 36 | 16WF40 | - | - | - | - | - | - | 402A | 402A | - | - | |
| 98 | - | 100 | 36 | 16WF40 | - | - | - | - | - | - | 205F | 335C | - | - | 2 |
| 99 | - | 100 | 36 | 16WF40 | - | - | - | - | - | - | 307C | 310B | - | - | 3 |

REMARKS

1. STANDARD STRUCTURAL TUBING 6X4X1/4
2. DETAIL 405 RIGHT END OF BEAM
3. DETAIL 405 LEFT END OF BEAM
4. DETAIL 406 RIGHT END OF BEAM
5. DETAIL 406 LEFT END OF BEAM
6. BEAM TYPE 402 AT FLOOR 9, TOWER B. USE 4X3/8 PLATE 1.

LICENSED PROFESSIONAL ENGINEER — LESLIE E. ROBERTSON — No. 34360 — UNIVERSITY OF THE STATE OF NEW YORK

SKILLING, HELLE, CHRISTIANSEN, ROBERTSON — Structural & Civil Engineers

REVISIONS

| PROJECT | TITLE | DATE |
|---|---|---|
| THE WORLD TRADE CENTER | BEAM SCHEDULE TOWERS A AND B | 7/17/68 |

| BEAM NO. | SIZE | TYPE | FY | SHAPE | PLATE 1 WIDTH | PLATE 1 THICK | PLATE 2 WIDTH | PLATE 2 THICK | DIMENSIONS LENGTH | DIMENSIONS DIM. A | SUPPORTS LEFT | SUPPORTS RIGHT | STUDS NO. | STUDS SIZE | REMARKS |
|---|---|---|---|---|---|---|---|---|---|---|---|---|---|---|---|
| 100 | - | 100 | 36 | 16WF40 | - | - | - | - | - | - | 402A | 402A | - | - | |
| 101 | - | 100 | 36 | 16WF40 | - | - | - | - | - | - | 205F | 220I | - | - | |
| 102 | - | 100 | 36 | 16B31 | - | - | - | - | - | - | 220D | 254B | - | - | |
| 103 | - | 100 | 36 | 16B31 | - | - | - | - | - | - | 254B | 254B | - | - | |
| 104 | - | 100 | 36 | 16B31 | - | - | - | - | - | - | 254B | 335B | - | - | 2 |
| 105 | - | 100 | 36 | 16B31 | - | - | - | - | - | - | 335B | 254B | - | - | 3 |
| 106 | - | 100 | 36 | 16B31 | - | - | - | - | - | - | 254B | 254B | - | - | |
| 107 | - | 100 | 36 | 16B31 | - | - | - | - | - | - | 254B | 220D | - | - | 6 |
| 108 | - | 100 | 36 | 8B13 | - | - | - | - | - | - | 17.4K | 17.4K | - | - | |
| 109 | 16X5-1/2BX | 206 | 36 | - | 4 | 3/8 | 16 | 3/4 | - | - | 206A | 254C | - | - | |
| 110 | - | 100 | 36 | 8B13 | - | - | - | - | - | - | 17.4K | 17.4K | - | - | |
| 111 | - | 100 | 50 | 15CM50.0 | - | - | - | - | - | - | 351A | 233A | - | - | |
| 112 | - | 100 | 36 | 8B13 | - | - | - | - | - | - | 17.4K | 17.4K | - | - | 4 |
| 113 | - | 100 | 36 | 8B13 | - | - | - | - | - | - | 17.4K | 17.4K | - | - | |
| 114 | - | 100 | 36 | 8B13 | - | - | - | - | - | - | 17.4K | 17.4K | - | - | |
| 115 | - | 100 | 36 | 8B13 | - | - | - | - | - | - | 17.4K | 17.4K | - | - | |
| 116 | - | 100 | 36 | 14B22 | - | - | - | - | - | - | 105A | 26.5K | 16 | 3/4X3 | |
| 117 | - | 100 | 36 | 12B19 | - | - | - | - | - | - | 26.5K | 26.5K | 18 | 3/4X3 | |
| 118 | - | 100 | 36 | 12B16.5 | - | - | - | - | - | - | 26.5K | 26.5K | 13 | 3/4X3 | |
| 119 | - | 100 | 50 | 16WF40 | - | - | - | - | - | - | 106A | 111I | 42 | 3/4X3 | |
| 120 | - | 100 | 50 | 16WF36 | - | - | - | - | - | - | 106A | 111I | 39 | 3/4X3D | |
| 121 | - | 100 | 36 | 8B13 | - | - | - | - | - | - | 17.4K | 17.4K | - | - | |
| 122 | - | 100 | 36 | 16WF36 | - | - | - | - | - | - | 26.5K | 105I | 12 | 3/4X3B | |
| 123 | - | 100 | 36 | 16B26 | - | - | - | - | - | - | 105I | 213A | 17 | 3/4X3 | |
| 124 | - | 100 | 36 | 8B13 | - | - | - | - | - | - | 17.4K | 17.4K | 9 | 3/4X3 | |
| 125 | - | 100 | 36 | 8B13 | - | - | - | - | - | - | 17.4K | 17.4K | 9 | 3/4X3 | |
| 126 | - | 404 | 50 | 18WF50 | - | - | - | - | - | - | 274A | 338D | 26 | 3/4X3 | |
| 127 | - | 100 | 50 | 16WF45 | - | - | - | - | - | - | 208C | 220I | 39 | 3/4X3D | |
| 128 | - | 100 | 36 | 16B31 | - | - | - | - | - | - | 26.5K | 26.5K | 29 | 3/4X3 | |
| 129 | - | 100 | 36 | 12B16.5 | - | - | - | - | - | - | 26.5K | 26.5K | 13 | 3/4X3 | |
| 130 | - | 100 | 36 | 16WF40 | - | - | - | - | - | - | 26.5K | 208C | - | - | |
| 131 | - | 100 | 36 | 16WF40 | - | - | - | - | - | - | 335C | 205F | - | - | 1 |
| 132 | - | 100 | 36 | 16WF40 | - | - | - | - | - | - | 401A | 401A | - | - | |
| 133 | - | 100 | 36 | 16WF40 | - | - | - | - | - | - | 205F | 220K | - | - | |

REMARKS

1 DETAIL 405 LEFT END OF BEAM
2 DETAIL 406 RIGHT END OF BEAM
3 DETAIL 406 LEFT END OF BEAM
4 USE DETAIL 170G IF STD CONNECTION INTERFERES.
6 BEAM TYPE 402 AT FLOOR 9 TOWER B
USE 4-1/2 X 1/4 PLATE 1

LICENSED PROFESSIONAL ENGINEER — LESLIE E. ROBERTSON — No. 54360 — UNIVERSITY OF THE STATE OF NEW YORK

**SKILLING-HELLE-CHRISTIANSEN-ROBERTSON** — **Civil & Structural Engineers**

PROJECT: THE WORLD TRADE CENTER | TITLE: BEAM SCHEDULE TOWERS A AND B | DATE: 10/ 9/68

REVISIONS

| BEAM NO. | SIZE | TYPE | FY | SHAPE | PLATE 1 WIDTH | PLATE 1 THICK | PLATE 2 WIDTH | PLATE 2 THICK | DIMENSIONS LENGTH | DIMENSIONS DIM. A | SUPPORTS LEFT | SUPPORTS RIGHT | STUDS NO. | STUDS SIZE | REMARKS |
|---|---|---|---|---|---|---|---|---|---|---|---|---|---|---|---|
| 134 | 25X7 BU | 300 | 36 | - | 7 | 1- 1/2 | 22 | 3/4 | - | - | 278A | 338E | - | - | |
| 135 | - | 100 | 36 | 18WF45 | - | - | - | - | - | - | 456D | 26.5K | - | - | (3) |
| 136 | - | 100 | 36 | 18WF45 | - | - | - | - | - | - | 26.5K | 26.5K | - | - | |
| 137 | 38X7 BU | 301 | 36 | - | 7 | 1- 3/4 | 34-1/2 | 3/4 | - | - | 352A | 220I | - | - | 1 |
| 138 | - | 100 | 36 | 16WF40 | - | - | - | - | - | - | 335C | 205F | - | - | 2 |
| 139 | 25X7 BU | 300 | 36 | - | 7 | 1 | 23 | 1/2 | - | - | 404A | 403A | - | - | X |
| 140 | 25X7 BU | 300 | 36 | - | 7 | 1 | 23 | 1/2 | - | - | 205G | 220J | - | - | |
| 141 | - | 100 | 50 | 16WF50 | - | - | - | - | - | - | 26.5K | 352A | - | - | |
| 142 | 25X6 BU | 300 | 36 | - | 6 | 1 | 23 | 1/2 | - | - | 105G | 278A | - | - | |
| 143 | 25X6 BU | 300 | 36 | - | 6 | 1- 1/2 | 22 | 5/8 | - | - | 105E | 44.2K | - | - | |
| 144 | - | 100 | 36 | 16WF40 | - | - | - | - | - | - | 335C | 205F | - | - | 2 |
| 145 | - | 100 | 36 | 16WF40 | - | - | - | - | - | - | 401A | 401A | - | - | |
| 146 | - | 100 | 36 | 16WF40 | - | - | - | - | - | - | 205F | 220I | - | - | |
| 147 | - | 100 | 36 | 16WF40 | - | - | - | - | - | - | 307C | 310B | - | - | 2 |
| 148 | - | 100 | 36 | 16WF40 | - | - | - | - | - | - | 402A | 402A | - | - | |
| 149 | - | 100 | 36 | 16WF40 | - | - | - | - | - | - | 205F | 220I | - | - | |
| 150 | - | 100 | 36 | 16WF40 | - | - | - | - | - | - | 205F | 220I | 35 | 3/4X3F | |
| 151 | - | 100 | 36 | 14B22 | - | - | - | - | - | - | 26.5K | 26.5K | 19 | 3/4X3F | |
| 152 | - | 100 | 36 | 12B16.5 | - | - | - | - | - | - | 26.5K | 26.5K | 18 | 3/4X3 | |
| 153 | - | 100 | 36 | SCH13.4 | - | - | - | - | - | - | 17.4K | 17.4K | - | - | |
| 154 | - | 100 | 36 | 12B16.5 | - | - | - | - | - | - | 26.5K | 26.5K | 10 | 3/4X3B | |
| 155 | - | 100 | 36 | 12B16.5 | - | - | - | - | - | - | 26.5K | 26.5K | 18 | 3/4X3 | |
| 156 | - | 100 | 36 | 16WF36 | - | - | - | - | - | - | 208C | 208C | 39 | 3/4X3J | |
| 157 | 18X4 BX | 200 | 36 | - | 2-1/2 | 3/8 | 18 | 3/4 | - | - | 296B | 274A | - | - | |
| 158 | - | 100 | 36 | 12B16.5 | - | - | - | - | - | - | 26.5K | 26.5K | 13 | 3/4X3 | |
| 159 | - | 100 | 36 | 16B31 | - | - | - | - | - | - | 26.5K | 26.5K | 24 | 3/4X3 | |
| 160 | - | 100 | 36 | 18WF50 | - | - | - | - | - | - | 26.5K | 213A | - | - | |
| 161 | - | 100 | 36 | 16WF45 | - | - | - | - | - | - | 208C | 172B | 47 | 3/4X3D | |
| 162 | - | 100 | 50 | 16WF40 | - | - | - | - | - | - | 106A | 111I | 39 | 3/4X3 | |
| 163 | - | 100 | 50 | 16WF36 | - | - | - | - | - | - | 106A | 111I | 39 | 3/4X3D | |
| 164 | - | 100 | 36 | 16WF36 | - | - | - | - | - | - | 26.5K | 105I | 12 | 3/4X3B | |
| 165 | - | 100 | 36 | 16B26 | - | - | - | - | - | - | 105I | 213A | 17 | 3/4X3 | |
| 166 | - | 100 | 36 | 8B13 | - | - | - | - | - | - | 17.4K | 17.4K | 11 | 3/4X3 | |

REMARKS

1 REINF. PLATES 6FT-0 X 3/4
2 DETAIL 405 LEFT END OF BEAM
3 DETAIL 456E LEFT END OF BEAM

LICENSED PROFESSIONAL ENGINEER ★ LESLIE E. ROBERTSON ★ No. 34360 ★ UNIVERSITY OF THE STATE OF NEW YORK

**SKILLING-HELLE-CHRISTIANSEN-ROBERTSON** **Civil & Structural Engineers**

| PROJECT | TITLE | DATE |
|---|---|---|
| THE WORLD TRADE CENTER | BEAM SCHEDULE TOWERS A AND B | 1/2. |

REVISIONS

| BEAM NO. | SIZE | TYPE | FY | SHAPE | PLATE 1 WIDTH | PLATE 1 THICK | PLATE 2 WIDTH | PLATE 2 THICK | DIMENSIONS LENGTH | DIMENSIONS DIM. A | SUPPORTS LEFT | SUPPORTS RIGHT | STUDS NO. | STUDS SIZE | REMARKS |
|---|---|---|---|---|---|---|---|---|---|---|---|---|---|---|---|
| 167 | - | 100 | 36 | 8B13 | - | - | - | - | - | - | 17.4K | 17.4K | 11 | 3/4X3 | |
| 168 | - | 100 | 36 | 14B22 | - | - | - | - | - | - | 105A | 26.5K | 19 | 3/4X3 | |
| 169 | - | 100 | 36 | 12B19 | - | - | - | - | - | - | 26.5K | 26.5K | 15 | 3/4X3 | |
| 170 | - | 100 | 36 | 12B16.5 | - | - | - | - | - | - | 26.5K | 26.5K | 15 | 3/4X3 | |
| 171 | - | 100 | 36 | 16WF40 | - | - | - | - | - | - | 335C | 205F | - | - | 2 |
| 172 | - | 100 | 36 | 16WF40 | - | - | - | - | - | - | 401A | 401A | - | - | X |
| 173 | - | 100 | 36 | 16WF40 | - | - | - | - | - | - | 205F | 220I | - | - | |
| 174 | - | 100 | 36 | 12B19 | - | - | - | - | - | - | 26.5K | 26.5K | 36 | 5/8X2 | |
| 175 | - | 100 | 36 | 16WF40 | - | - | - | - | - | - | 220K | 205F | - | - | |
| 176 | 25X7 BU | 300 | 36 | - | 7 | 1- 1/2 | 22 | 3/4 | - | - | 57.0K | 42.8K | - | - | |
| 177 | 38X7 BU | 301 | 36 | - | 7 | 1- 3/4 | 34-1/2 | 3/4 | - | - | 352A | 172B | 39 | 3/4X3D | 1 |
| 178 | - | 100 | 36 | 18WF50 | - | - | - | - | - | - | 106A | 111J | 76 | 3/4X3 | |
| 179 | - | 100 | 36 | 16WF40 | - | - | - | - | - | - | 106A | 111I | 39 | 3/4X3D | |
| 180 | 25X6 BU | 300 | 36 | - | 6 | 1- 1/2 | 22 | 5/8 | - | - | 201D | 170D | - | - | |
| 181 | - | 100 | 36 | 18WF45 | - | - | - | - | - | - | 26.5K | 456A | - | - | |
| 182 | 25X6 BU | 300 | 36 | - | 6 | 1- 1/2 | 22 | 5/8 | - | - | 105E | 74.9K | - | - | |
| 183 | - | 100 | 36 | 16WF36 | - | - | - | - | - | - | 26.5K | 26.5K | 39 | 3/4X3 | |
| 184 | 25X6 BU | 300 | 36 | - | 6 | 1 | 23 | 1/2 | - | - | 201D | 201D | - | - | |
| 185 | - | 100 | 36 | 18WF45 | - | - | - | - | - | - | 26.5K | 26.5K | - | - | |
| 186 | 25X6 BU | 300 | 36 | - | 6 | 1 | 23 | 1/2 | - | - | 105J | 105E | - | - | |
| 187 | - | 100 | 36 | 12B16.5 | - | - | - | - | - | - | 26.5K | 26.5K | 22 | 3/4X3 | |
| 188 | - | 100 | 36 | 18WF45 | - | - | - | - | - | - | 28.8K | 105B | 26 | 3/4X3B | |
| 189 | - | 100 | 36 | 16WF40 | - | - | - | - | - | - | 307C | 310B | - | - | 2 |
| 190 | - | 100 | 36 | 16WF40 | - | - | - | - | - | - | 402A | 402A | - | - | |
| 191 | - | 100 | 36 | 16WF40 | - | - | - | - | - | - | 205F | 220I | - | - | |
| 192 | 25X7 BU | 305 | 36 | - | 7 | 1 | 23 | 1/2 | - | - | 335D | 205G | - | - | 2 |
| 193 | 25X7 BU | 300 | 36 | - | 7 | 1 | 23 | 1/2 | - | - | 403A | 403A | - | - | |
| 194 | 25X7 BU | 300 | 36 | - | 7 | 1 | 23 | 1/2 | - | - | 205G | 220I | - | - | |
| 195 | - | 100 | 36 | 14B22 | - | - | - | - | - | - | 201A | 26.5K | 19 | 3/4X3 | |
| 196 | - | 100 | 50 | 12B19 | - | - | - | - | - | - | 26.5K | 26.5K | 21 | 3/4X3 | |
| 197 | - | 100 | 36 | 12B19 | - | - | - | - | - | - | 26.5K | 26.5K | - | - | |
| 198 | - | 100 | 36 | 12B16.5 | - | - | - | - | - | - | 105A | 26.5K | 15 | 3/4X4-1/2C | |
| 199 | - | 100 | 36 | 12B16.5 | - | - | - | - | - | - | 26.5K | 26.5K | - | - | |

REMARKS

1 REINF. PLATES 7FT-0 X 3/4
2 DETAIL 405 LEFT END OF BEAM

LICENSED PROFESSIONAL ENGINEER LESLIE E. ROBERTSON No. 34360 UNIVERSITY OF THE STATE OF NEW YORK

**SKILLING-HELLE-CHRISTIANSEN-ROBERTSON** — **Civil & Structural Engineers**

PROJECT: THE WORLD TRADE CENTER | TITLE: BEAM SCHEDULE TOWERS A AND B | DATE: 11/21/67

REVISIONS

| BEAM NO. | SIZE | TYPE | FY | PLATE 1 SHAPE | PLATE 1 WIDTH | PLATE 1 THICK | PLATE 2 WIDTH | PLATE 2 THICK | DIMENSIONS LENGTH | DIMENSIONS DIM. A | SUPPORTS LEFT | SUPPORTS RIGHT | STUDS NO. | STUDS SIZE | REMARKS |
|---|---|---|---|---|---|---|---|---|---|---|---|---|---|---|---|
| 200 | - | 100 | 36 | B813 | - | - | - | - | - | - | 17.4K | 17.4K | - | - | |
| 201 | 18X4 CH | 509 | 50 | 18CH45.8 | - | - | - | - | - | - | 233A | 245A | - | - | |
| 202 | - | 100 | 36 | 18CH42.7 | - | - | - | - | - | - | 410A | 411A | - | - | |
| 203 | 18X4 CH | 100 | 50 | 18CH42.7 | - | - | - | - | - | - | 245A | 255A | - | - | |
| 204 | - | 100 | 36 | 10CH25 | - | - | - | - | - | - | 255A | 255A | - | - | |
| 205 | 18X4 CH | 508 | 50 | 18CH42.7 | 2-7/8 | 7/8 | - | - | 24FT 0 | 1FT 0 | 255A | 245A | - | - | |
| 206 | - | 100 | 36 | 18CH42.7 | - | - | - | - | - | - | 412A | 410A | - | - | |
| 207 | - | 100 | 50 | 18CH45.8 | - | - | - | - | - | - | 245A | 233A | - | - | |
| 208 | - | 100 | 50 | 18CH45.8 | - | - | - | - | - | - | 233A | 245A | - | - | |
| 209 | - | 100 | 36 | 18CH42.7 | - | - | - | - | - | - | 410A | 412A | - | - | |
| 210 | 18X4 CH | 501 | 50 | 18CH42.7 | 2-7/8 | 7/8 | - | - | 24FT 0 | 1FT 0 | 245A | 255A | - | - | |
| 211 | - | 100 | 36 | 10CH25 | - | - | - | - | - | - | 255A | 255A | - | - | |
| 212 | 18X4 CH | 100 | 50 | 18CH42.7 | - | - | - | - | - | - | 255A | 245A | - | - | |
| 213 | - | 100 | 36 | 18CH42.7 | - | - | - | - | - | - | 411A | 410A | - | - | |
| 214 | 18X4 CH | 502 | 50 | 18CH45.8 | - | - | - | - | - | - | 245A | 233A | - | - | |
| 215 | - | 100 | 50 | 15CH50.0 | - | - | - | - | - | - | 233A | 315A | - | - | |
| 216 | - | 100 | 36 | 15CH33.9 | - | - | - | - | - | - | 420A | 421A | - | - | |
| 217 | - | 100 | 36 | 15CH33.9 | - | - | - | - | - | - | 422A | 423A | - | - | |
| 218 | - | 100 | 50 | 15CH50.0 | - | - | - | - | - | - | 315A | 233A | - | - | |
| 219 | 18X4 CH | 509 | 50 | 18CH45.8 | - | - | - | - | - | - | 232A | 246A | - | - | |
| 220 | - | 100 | 36 | 18CH42.7 | - | - | - | - | - | - | 410A | 411A | - | - | |
| 221 | 18X4 CH | 100 | 50 | 18CH42.7 | - | - | - | - | - | - | 246A | 355A | - | - | |
| 222 | - | 100 | 36 | 10CH25 | - | - | - | - | - | - | 355A | 249A | - | - | |
| 223 | 18X4 CH | 508 | 50 | 18CH42.7 | 2-7/8 | 7/8 | - | - | 24FT 0 | 1FT 0 | 249A | 246A | - | - | |
| 224 | - | 100 | 36 | 18CH42.7 | - | - | - | - | - | - | 412A | 410A | - | - | |
| 225 | - | 100 | 50 | 18CH45.8 | - | - | - | - | - | - | 246A | 232A | - | - | |
| 226 | - | 100 | 50 | 18CH45.8 | - | - | - | - | - | - | 232A | 246A | - | - | |
| 227 | - | 100 | 36 | 18CH42.7 | - | - | - | - | - | - | 410A | 412A | - | - | |
| 228 | 18X4 CH | 501 | 50 | 18CH42.7 | 2-7/8 | 7/8 | - | - | 24FT 0 | 1FT 0 | 246A | 249A | - | - | |
| 229 | - | 100 | 36 | 10CH25 | - | - | - | - | - | - | 249A | 249A | - | - | |
| 230 | 18X4 CH | 100 | 50 | 18CH42.7 | - | - | - | - | - | - | 249A | 246A | - | - | |
| 231 | - | 100 | 36 | 18CH42.7 | - | - | - | - | - | - | 411A | 410A | - | - | |
| 232 | 18X4 CH | 502 | 50 | 18CH45.8 | - | - | - | - | - | - | 246A | 232A | - | - | |
| 233 | - | 100 | 36 | 15CH33.9 | - | - | - | - | - | - | 315A | 315D | - | - | |

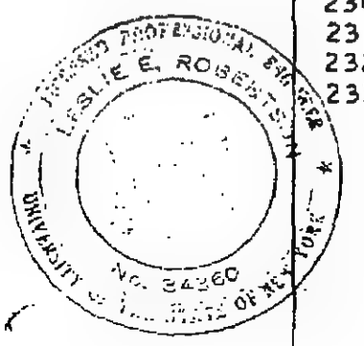

**SKILLING-HELLE-CHRISTIANSEN-ROBERTSON** — **Civil & Structural Engineers**

PROJECT: THE WORLD TRADE CENTER | TITLE: BEAM SCHEDULE TOWERS A AND B | DATE: 1/22/68

REVISIONS

| BEAM NO. | SIZE | TYPE | FY | SHAPE | PLATE 1 WIDTH | PLATE 1 THICK | PLATE 2 WIDTH | PLATE 2 THICK | DIMENSIONS LENGTH | DIMENSIONS DIM. A | SUPPORTS LEFT | SUPPORTS RIGHT | STUDS NO. | STUDS SIZE | REMARKS |
|---|---|---|---|---|---|---|---|---|---|---|---|---|---|---|---|
| 234 | - | 100 | 36 | 15CH33.9 | - | - | - | - | - | - | 422A | 423A | - | - | |
| 235 | - | 100 | 36 | 15CH40 | - | - | - | - | - | - | 420A | 351B | - | - | |
| 236 | 30X9 BX | 251 | 36 | - | 9 | 1 | 28 | 3/8 | - | - | 347A | 347A | - | - | 1 |
| 237 | - | 100 | 50 | 15CH50.0 | - | - | - | - | - | - | 233A | 315A | - | - | |
| 238 | - | 100 | 36 | 15CH40 | - | - | - | - | - | - | 422A | 423A | - | - | |
| 239 | - | 100 | 50 | 15CH50.0 | - | - | - | - | - | - | 315B | 233A | - | - | |
| 240 | - | 100 | 50 | 15CH50.0 | - | - | - | - | - | - | 315A | 233A | - | - | |
| 241 | - | 100 | 50 | 15CH50.0 | - | - | - | - | - | - | 233A | 315A | - | - | |
| 242 | - | 100 | 36 | 15CH33.9 | - | - | - | - | - | - | 420A | 421A | - | - | |
| 243 | - | 100 | 36 | 15CH40 | - | - | - | - | - | - | 422A | 423A | - | - | |
| 244 | - | 100 | 36 | 15CH33.9 | - | - | - | - | - | - | 422A | 423A | - | - | |
| 245 | - | 100 | 36 | 14B22 | - | - | - | - | - | - | 201A | 26.5K | 19 | 3/4X3 | |
| 246 | - | 100 | 50 | 15CH50.0 | - | - | - | - | - | - | 233A | 315A | - | - | |
| 247 | - | 100 | 36 | 15CH33.9 | - | - | - | - | - | - | 420A | 421A | - | - | |
| 248 | - | 100 | 36 | 15CH33.9 | - | - | - | - | - | - | 422A | 423A | - | - | |
| 249 | - | 100 | 50 | 15CH50.0 | - | - | - | - | - | - | 315A | 233A | - | - | |
| 250 | 18X4 BX | 200 | 36 | - | 2-1/2 | 3/8 | 18 | 3/4 | - | - | 296B | 274A | - | - | |
| 251 | - | 100 | 36 | 16B26 | - | - | - | - | - | - | 105B | 105B | 8 | 3/4X3 | |
| 252 | - | 100 | 36 | 8B13 | - | - | - | - | - | - | 17.4K | 17.4K | 8 | 3/4X3 | |
| 253 | - | 100 | 36 | 8B13 | - | - | - | - | - | - | 17.4K | 17.4K | - | - | |
| 254 | - | 100 | 36 | 8B13 | - | - | - | - | - | - | 105H | 105A | 8 | 3/4X4-1/2 | |
| 255 | - | 100 | 36 | 16WF45 | - | - | - | - | - | - | 106A | 106A | 41 | 3/4X3 | |
| 256 | - | 100 | 36 | 16WF40 | - | - | - | - | - | - | 307C | 310B | - | - | 2 |
| 257 | - | 100 | 36 | 16WF40 | - | - | - | - | - | - | 402A | 402A | - | - | |
| 258 | - | 100 | 36 | 16WF40 | - | - | - | - | - | - | 205F | 220I | - | - | |
| 259 | - | 402 | 36 | 16WF40 | 4 | 3/8 | | - | 16FT 0 | - | 335C | 205F | - | - | 2 |
| 260 | - | 402 | 36 | 16WF40 | 4 | 3/8 | - | - | 12FT 0 | - | 402A | 402A | - | - | |
| 261 | - | 100 | 36 | 16WF40 | - | - | - | - | - | - | 205F | 220I | 15 | 3/4X3 | |
| 262 | - | 100 | 36 | 12B19 | - | - | - | - | - | - | 26.5K | 26.5K | 15 | 3/4X3 | |
| 263 | - | 100 | 36 | 12B19 | - | - | - | - | - | - | 26.5K | 26.5K | - | - | |
| 264 | - | 100 | 36 | 8B13 | - | - | - | - | - | - | 17.4K | 17.4K | - | - | |
| 265 | - | 100 | 50 | 16WF40 | - | - | - | - | - | - | 335C | 205F | - | - | 2 |
| 266 | - | 100 | 36 | 16WF40 | - | - | - | - | - | - | 402A | 402A | - | - | |

REMARKS

1 SEE 5-AB2

2 DETAIL 405 LEFT END OF BEAM

LICENSED PROFESSIONAL ENGINEER — LESLIE E. ROBERTSON — No. 34360 — STATE OF NEW YORK

**SKILLING-HELLE-CHRISTIANSEN-ROBERTSON** — **Civil & Structural Engineers**

PROJECT: THE WORLD TRADE CENTER | TITLE: BEAM SCHEDULE TOWERS A AND B | DATE: 10/ 9/68

REVISIONS

| BEAM NO. | SIZE | TYPE | FY | SHAPE | PLATE 1 WIDTH | PLATE 1 THICK | PLATE 2 WIDTH | PLATE 2 THICK | DIMENSIONS LENGTH | DIMENSIONS DIM. A | SUPPORTS LEFT | SUPPORTS RIGHT | STUDS NO. | STUDS SIZE | REMARKS |
|---|---|---|---|---|---|---|---|---|---|---|---|---|---|---|---|
| 267 | - | 100 | 36 | 16WF40 | - | - | - | - | - | - | 205F | 220I | - | - | |
| 268 | - | 100 | 36 | 16B31 | - | - | - | - | - | - | 26.5K | 26.5K | 24 | 3/4X3 | |
| 269 | - | 100 | 36 | 12B16.5 | - | - | - | - | - | - | 26.5K | 26.5K | 15 | 3/4X3 | |
| 270 | - | 100 | 36 | 12B16.5 | - | - | - | - | - | - | 26.5K | 26.5K | 15 | 3/4X3 | |
| 271 | - | 100 | 36 | 12B19 | - | - | - | - | - | - | 26.5K | 26.5K | 18 | 3/4X3 | |
| 272 | - | 100 | 36 | 12B16.5 | - | - | - | - | - | - | 26.5K | 26.5K | - | - | X |
| 273 | - | 100 | 36 | 12B16.5 | - | - | - | - | - | - | 26.5K | 26.5K | 13 | 3/4X3 | |
| 274 | - | 100 | 36 | 8B13 | - | - | - | - | - | - | 17.4K | 17.4K | 11 | 3/4X3 | |
| 275 | - | 100 | 36 | 8B13 | - | - | - | - | - | - | 17.4K | 17.4K | 11 | 3/4X3 | |
| 276 | - | 100 | 36 | 8B13 | - | - | - | - | - | - | 105H | 105A | 11 | 3/4X3 | |
| 277 | 16X5-1/2BX | 201 | 36 | - | 4 | 3/8 | 16 | 3/4 | - | - | 254B | 247A | - | - | |
| 278 | - | 100 | 36 | 16WF40 | - | - | - | - | - | - | 220F | 205F | - | - | |
| 279 | - | 100 | 36 | 16WF40 | - | - | - | - | - | - | 401A | 401A | - | - | |
| 280 | - | 100 | 36 | 16WF40 | - | - | - | - | - | - | 205F | 335C | - | - | 1 |
| 281 | - | 100 | 50 | 16WF40 | - | - | - | - | - | - | 335C | 205F | - | - | 2 |
| 282 | - | 100 | 36 | 16WF40 | - | - | - | - | - | - | 402A | 402A | - | - | |
| 283 | - | 100 | 36 | 16WF40 | - | - | - | - | - | - | 205F | 220I | 33 | 3/4X3 | |
| 284 | - | 100 | 36 | 18WF50 | - | - | - | - | - | - | 338D | 274A | - | - | |
| 285 | - | 100 | 36 | 16WF45 | - | - | - | - | - | - | 220I | 208C | 39 | 3/4X3D | |
| 286 | - | 100 | 36 | 16WF36 | - | - | - | - | - | - | 208C | 287E | 39 | 3/4X3J | |
| 287 | - | 100 | 50 | 16WF36 | - | - | - | - | - | - | 106A | 106B | 39 | 3/4X3 | |
| 288 | - | 100 | 50 | 16WF36 | - | - | - | - | - | - | 106A | 106B | 39 | 3/4X3D | |
| 289 | - | 100 | 50 | 16WF36 | - | - | - | - | - | - | 106B | 111I | 39 | 3/4X3 | |
| 290 | - | 100 | 36 | 16B31 | - | - | - | - | - | - | 26.5K | 26.5K | - | - | |
| 291 | - | 100 | 36 | 16WF36 | - | - | - | - | - | - | 26.5K | 208C | 15 | 3/4X3B | |
| 292 | - | 100 | 36 | 15CH40 | - | - | - | - | - | - | 420A | 351A | - | - | |
| 293 | 30X9 BX | 251 | 36 | - | 9 | 1 | 28 | 3/8 | - | - | 347A | 347A | - | - | |
| 294 | 25X7 BU | 300 | 36 | - | 7 | 1 | 23 | 1/2 | - | - | 220J | 205G | - | - | |
| 295 | 25X7 BU | 300 | 36 | - | 7 | 1 | 23 | 1/2 | - | - | 403A | 404A | - | - | |
| 296 | - | 100 | 36 | 16WF40 | - | - | - | - | - | - | 205F | 335C | - | - | 1 |
| 297 | - | 100 | 36 | 16WF58 | - | - | - | - | - | - | 26.5K | 26.5K | - | - | |
| 298 | 25X6 BU | 300 | 36 | - | 6 | 1 | 23 | 1/2 | - | - | 111L | 278A | - | - | |
| 299 | - | 100 | 36 | 16WF58 | - | - | - | - | - | - | 456D | 26.5K | - | - | (3) |

REMARKS

1 DETAIL 405 RIGHT END OF BEAM
2 DETAIL 405 LEFT END OF BEAM
3 DETAIL 456E LEFT END OF BEAM

LICENSED PROFESSIONAL ENGINEER — LESLIE E. ROBERTSON — No. 34360 — UNIVERSITY OF THE STATE OF NEW YORK

**SKILLING-HELLE-CHRISTIANSEN-ROBERTSON** — **Civil & Structural Engineers**

PROJECT: THE WORLD TRADE CENTER | TITLE: BEAM SCHEDULE TOWERS A AND B | DATE: 1/22/68

REVISIONS

| BEAM NO. | SIZE | TYPE | FY | PLATE 1 SHAPE | PLATE 1 WIDTH | PLATE 1 THICK | PLATE 2 WIDTH | PLATE 2 THICK | DIMENSIONS LENGTH | DIMENSIONS DIM. A | SUPPORTS LEFT | SUPPORTS RIGHT | STUDS NO. | STUDS SIZE | REMARKS |
|---|---|---|---|---|---|---|---|---|---|---|---|---|---|---|---|
| 300 | 25X6 BU | 300 | 36 | - | 6 | 1- 1/2 | 22 | 5/8 | - | - | 105E | 44.2K | - | - | |
| 301 | 25X7 BU | 300 | 36 | - | 7 | 1- 1/2 | 22 | 3/4 | - | - | 338E | 278A | - | - | |
| 302 | 38X7 BU | 301 | 36 | - | 7 | 1- 3/4 | 34-1/2 | 3/4 | - | - | 220I | 352B | - | - | 1 |
| 303 | - | 100 | 50 | 16WF36 | - | - | - | - | - | - | 106A | 106B | 39 | 3/4X3 | |
| 304 | - | 100 | 50 | 16WF36 | - | - | - | - | - | - | 106A | 106B | 39 | 3/4X3 | |
| 305 | - | 100 | 36 | 16WF40 | - | - | - | - | - | - | 111I | 354B | 33 | 3/4X3 | X |
| 306 | - | 100 | 36 | 16WF36 | - | - | - | - | - | - | 111H | 106A | 33 | 3/4X3D | |
| 307 | - | 100 | 36 | 14WF43 | - | - | - | - | - | - | 26.5K | 105B | 15 | 3/4X3B | |
| 308 | - | 100 | 50 | 16WF40 | - | - | - | - | - | - | 220I | 205F | 44 | 3/4X3 | |
| 309 | - | 100 | 36 | 16WF40 | - | - | - | - | - | - | 401A | 401A | - | - | |
| 310 | - | 100 | 36 | 16WF40 | - | - | - | - | - | - | 335C | 205F | - | - | 2 |
| 311 | - | 100 | 36 | 16WF40 | - | - | - | - | - | - | 402A | 402A | - | - | |
| 312 | - | 100 | 36 | 12B19 | - | - | - | - | - | - | 26.5K | 26.5K | 18 | 3/4X3 | |
| 313 | - | 100 | 36 | 12B19 | - | - | - | - | - | - | 26.5K | 26.5K | 15 | 3/4X3 | |
| 314 | - | 100 | 36 | 14B22 | - | - | - | - | - | - | 354B | 26.5K | 16 | 3/4X3 | |
| 315 | - | 100 | 36 | 14B22 | - | - | - | - | - | - | 105B | 175B | 19 | 3/4X3 | |
| 316 | - | 100 | 36 | 12B16.5 | - | - | - | - | - | - | 105H | 26.5K | 13 | 3/4X4-1/2C | |
| 317 | - | 100 | 36 | 8B13 | - | - | - | - | - | - | 17.4K | 17.4K | 9 | 3/4X3 | |
| 318 | - | 100 | 36 | 8B13 | - | - | - | - | - | - | 17.4K | 17.4K | 9 | 3/4X3 | |
| 319 | - | 100 | 36 | 16B26 | - | - | - | - | - | - | 111M | 213A | 24 | 3/4X3 | |
| 320 | - | 100 | 50 | 16WF36 | - | - | - | - | - | - | 106B | 111I | 39 | 3/4X3 | |
| 321 | - | 100 | 36 | 16B26 | - | - | - | - | - | - | 105B | 105B | 16 | 3/4X3 | |
| 322 | - | 100 | 36 | 8B13 | - | - | - | - | - | - | 105H | 105H | 9 | 3/4X4-1/2 | |
| 323 | - | 404 | 36 | 18WF45 | - | - | - | - | - | - | 26.5K | 274A | 26 | 3/4X3 | |
| 324 | - | 100 | 36 | 15CH40 | - | - | - | - | - | - | 422A | 423A | - | - | |
| 325 | - | 100 | 36 | 16WF40 | - | - | - | - | - | - | 220I | 205F | - | - | |
| 326 | - | 100 | 36 | 16WF40 | - | - | - | - | - | - | 401A | 401A | - | - | |
| 327 | - | 100 | 36 | 16WF40 | - | - | - | - | - | - | 111I | 354B | 39 | 3/4X3 | |
| 328 | - | 100 | 36 | 16WF36 | - | - | - | - | - | - | 220I | 208D | 39 | 3/4X3E | |
| 329 | - | 100 | 36 | 12B19 | - | - | - | - | - | - | 26.5K | 26.5K | 15 | 3/4X3 | |
| 330 | - | 100 | 36 | 12B19 | - | - | - | - | - | - | 26.5K | 26.5K | 15 | 3/4X3 | |
| 331 | - | 100 | 36 | 12B19 | - | - | - | - | - | - | 354B | 26.5K | 15 | 3/4X3 | |
| 332 | - | 100 | 36 | 8B13 | - | - | - | - | - | - | 17.4K | 17.4K | 11 | 3/4X3 | |
| 333 | - | 100 | 36 | 8B13 | - | - | - | - | - | - | 17.4K | 17.4K | 11 | 3/4X3 | |

REMARKS

1 REINF. PLATES 7FT-6 X 3/4

2 DETAIL 405 LEFT END OF BEAM

LICENSED PROFESSIONAL ENGINEER LESLIE E. ROBERTSON No. 34360 STATE OF NEW YORK

5-AB1- 10

**SKILLING-HELLE-CHRISTIANSEN-ROBERTSON** — **Civil & Structural Engineers**

PROJECT: THE WORLD TRADE CENTER | TITLE: BEAM SCHEDULE TOWERS A AND B | DATE: 1/22/68

REVISIONS

| BEAM NO. | SIZE | TYPE | FY | PLATE 1 SHAPE | PLATE 1 WIDTH | PLATE 1 THICK | PLATE 2 WIDTH | PLATE 2 THICK | DIMENSIONS LENGTH | DIMENSIONS DIM. A | SUPPORTS LEFT | SUPPORTS RIGHT | STUDS NO. | STUDS SIZE | REMARKS |
|---|---|---|---|---|---|---|---|---|---|---|---|---|---|---|---|
| 334 | - | 100 | 36 | 8B13 | - | - | - | - | - | - | 17.4K | 17.4K | 11 | 3/4X3 | |
| 335 | - | 100 | 36 | 16B26 | - | - | - | - | - | - | 111M | 213A | 21 | 3/4X3 | |
| 336 | - | 100 | 50 | 15CH50.0 | - | - | - | - | - | - | 315A | 233A | - | - | |
| 337 | - | 100 | 36 | 15CH33.9 | - | - | - | - | - | - | 422A | 423A | - | - | |
| 338 | - | 100 | 36 | 12B19 | - | - | - | - | - | - | 26.5K | 26.5K | 40 | 5/8X2 | |
| 339 | - | 100 | 36 | 12B19 | - | - | - | - | - | - | 26.5K | 26.5K | 15 | 3/4X3 | X |
| 340 | - | 100 | 36 | 12B19 | - | - | - | - | - | - | 26.5K | 26.5K | 15 | 3/4X3 | |
| 341 | - | 100 | 36 | 14B22 | - | - | - | - | - | - | 354B | 26.5K | 16 | 3/4X3 | |
| 342 | - | 100 | 36 | 14B26 | - | - | - | - | - | - | 283M | 172B | - | - | |
| 343 | - | 100 | 36 | 14B22 | - | - | - | - | - | - | 208B | 335C | 16 | 3/4X3 | |
| 344 | - | 100 | 36 | 14B22 | - | - | - | - | - | - | 216A | 335C | 16 | 3/4X3 | |
| 345 | - | 100 | 36 | 14B22 | - | - | - | - | - | - | 105B | 175B | 16 | 3/4X3 | |
| 346 | - | 100 | 36 | 8B13 | - | - | - | - | - | - | 17.4K | 17.4K | 9 | 3/4X3 | |
| 347 | - | 100 | 36 | 8B13 | - | - | - | - | - | - | 17.4K | 17.4K | 9 | 3/4X3 | |
| 348 | - | 100 | 36 | 8B13 | - | - | - | - | - | - | 17.4K | 17.4K | 9 | 3/4X3 | |
| 349 | - | 100 | 36 | 16B26 | - | - | - | - | - | - | 111M | 213A | - | - | |
| 350 | - | 100 | 36 | 8B13 | - | - | - | - | - | - | 17.4K | 17.4K | 9 | 5/8X2 | |
| 351 | 16X4 BX | 200 | 36 | - | 2-1/2 | 3/8 | 16 | 3/4 | - | - | 372A | 282A | - | - | |
| 352 | - | 100 | 36 | 14B22 | - | - | - | - | - | - | 26.5K | 208B | 9 | 3/4X3 | |
| 353 | - | 100 | 36 | 8B13 | - | - | - | - | - | - | 105D | 105D | 9 | 3/4X3 | |
| 354 | - | 100 | 36 | 16B26 | - | - | - | - | - | - | 105B | 105B | - | - | |
| 355 | - | 100 | 36 | 16WF36 | - | - | - | - | - | - | 26.5K | 208D | 15 | 3/4X3B | |
| 356 | - | 100 | 36 | 16WF36 | - | - | - | - | - | - | 170B | 287E | 15 | 3/4X3B | |
| 357 | - | 100 | 36 | 14B22 | - | - | - | - | - | - | 335C | 26.5K | 13 | 3/4X3 | |
| 358 | - | 100 | 36 | 16WF36 | - | - | - | - | - | - | 307C | 208D | 15 | 3/4X3B | |
| 359 | - | 404 | 36 | 18WF45 | - | - | - | - | - | - | 274A | 282A | - | - | |
| 360 | - | 100 | 36 | 16WF36 | - | - | - | - | - | - | 26.5K | 26.5K | - | - | |
| 361 | - | 100 | 36 | 16WF36 | - | - | - | - | - | - | 220I | 208D | 39 | 3/4X3E | |
| 362 | - | 100 | 36 | 16WF36 | - | - | - | - | - | - | 208D | 287E | 39 | 3/4X3J | |
| 363 | - | 100 | 36 | 16WF36 | - | - | - | - | - | - | 287E | 208D | 39 | 3/4X3 | |
| 364 | - | 100 | 36 | 16WF36 | - | - | - | - | - | - | 208D | 26.5K | 9 | 3/4X3F | |
| 365 | - | 100 | 36 | 14B22 | - | - | - | - | - | - | 26.5K | 26.5K | 16 | 3/4X3 | |
| 366 | 30X9 BX | 251 | 36 | - | 9 | 1 | 28 | 3/8 | - | - | 347A | 347A | - | - | |

LICENSED PROFESSIONAL ENGINEER — LESLIE E. ROBERTSON — No. 34360 — STATE OF NEW YORK

5-AH1- 11

**SKILLING-HELLE-CHRISTIANSEN-ROBERTSON** — **Civil & Structural Engineers**

PROJECT: THE WORLD TRADE CENTER | TITLE: BEAM SCHEDULE TOWERS A AND B | DATE: 1/22/68

REVISIONS

| BEAM NO. | SIZE | TYPE | FY | SHAPE | PLATE 1 WIDTH | PLATE 1 THICK | PLATE 2 WIDTH | PLATE 2 THICK | DIMENSIONS LENGTH | DIMENSIONS DIM. A | SUPPORTS LEFT | SUPPORTS RIGHT | STUDS NO. | STUDS SIZE | REMARKS |
|---|---|---|---|---|---|---|---|---|---|---|---|---|---|---|---|
| 367 | - | 100 | 36 | 12B16.5 | - | - | - | - | - | - | 26.5K | 26.5K | 13 | 3/4X3 | |
| 368 | - | 100 | 36 | 15CH33.9 | - | - | - | - | - | - | 315A | 315D | - | - | |
| 369 | - | 100 | 36 | 12B16.5 | - | - | - | - | - | - | 17.4K | 17.4K | 14 | 3/4X3E | |
| 370 | - | 100 | 36 | 15CH40 | - | - | - | - | - | - | 315B | 315E | - | - | |
| 371 | - | 100 | 36 | 16WF45 | - | - | - | - | - | - | 111I | 354B | 41 | 3/4X3 | X |
| 372 | - | 404 | 36 | 16WF45 | - | - | - | - | - | - | 213A | 282A | (26) | 3/4X3 | |
| 373 | - | 100 | 36 | 16WF40 | - | - | - | - | - | - | 220I | 205F | - | - | |
| 374 | - | 100 | 36 | 16WF40 | - | - | - | - | - | - | 401A | 401A | - | - | |
| 375 | - | 100 | 36 | 16WF40 | - | - | - | - | - | - | 205F | 335C | - | - | 1 |
| 376 | - | 100 | 36 | 16WF40 | - | - | - | - | - | - | 335C | 205F | - | - | 2 |
| 377 | - | 100 | 36 | 16WF40 | - | - | - | - | - | - | 402A | 402A | - | - | |
| 378 | - | 100 | 36 | 16WF40 | - | - | - | - | - | - | 205F | 220I | - | - | |
| 379 | - | 100 | 36 | 16WF40 | - | - | - | - | - | - | 220I | 205F | - | - | |
| 380 | - | 100 | 36 | 16WF40 | - | - | - | - | - | - | 402A | 402A | - | - | |
| 381 | - | 100 | 36 | 16WF40 | - | - | - | - | - | - | 205F | 335C | - | - | 1 |
| 382 | - | 100 | 36 | 16WF40 | - | - | - | - | - | - | 307C | 310B | - | - | 2 |
| 383 | - | 100 | 36 | 16WF40 | - | - | - | - | - | - | 402A | 402A | - | - | |
| 384 | - | 100 | 36 | 16WF40 | - | - | - | - | - | - | 205F | 220I | - | - | |
| 385 | - | 100 | 36 | 16B31 | - | - | - | - | - | - | 220D | 254C | - | - | |
| 386 | - | 100 | 36 | 16B31 | - | - | - | - | - | - | 254C | 254C | - | - | |
| 387 | - | 100 | 36 | 16B31 | - | - | - | - | - | - | 254C | 335B | - | - | 3 |
| 388 | - | 100 | 36 | 16B31 | - | - | - | - | - | - | 335B | 254C | - | - | 4 |
| 389 | - | 100 | 36 | 16B31 | - | - | - | - | - | - | 254C | 254C | - | - | |
| 390 | - | 100 | 36 | 16B31 | - | - | - | - | - | - | 254C | 220D | - | - | |
| 391 | - | 100 | 36 | 16B31 | - | - | - | - | - | - | 220D | 254B | - | - | |
| 392 | - | 100 | 36 | 16B31 | - | - | - | - | - | - | 254B | 254B | - | - | |
| 393 | - | 100 | 36 | 16B31 | - | - | - | - | - | - | 254B | 335B | - | - | 3 |
| 394 | - | 100 | 36 | 16B31 | - | - | - | - | - | - | 335B | 254B | - | - | 4 |
| 395 | - | 100 | 36 | 16B31 | - | - | - | - | - | - | 254B | 254B | - | - | |
| 396 | - | 100 | 36 | 16B31 | - | - | - | - | - | - | 254B | 220D | - | - | |
| 397 | - | 100 | 36 | 12B19 | - | - | - | - | - | - | 335B | 235C | 13 | 3/4X3 | |
| 398 | - | 100 | 36 | 12B19 | - | - | - | - | - | - | 335B | 235D | 13 | 3/4X3 | |
| 399 | - | 100 | 36 | 16B26 | - | - | - | - | - | - | 201F | 201F | - | - | |

REMARKS

1 DETAIL 405 RIGHT END OF BEAM
2 DETAIL 405 LEFT END OF BEAM
3 DETAIL 406 RIGHT END OF BEAM
4 DETAIL 406 LEFT END OF BEAM

LICENSED PROFESSIONAL ENG'RS — LESLIE E. ROBERTSON — No. 34360 — REGISTERED TO THE STATE OF NEW YORK

S-251- 12

**SKILLING, HELLE, CHRISTIANSEN, ROBERTSON** — Structural & Civil Engineers

PROJECT: THE WORLD TRADE CENTER | TITLE: BEAM SCHEDULE TOWERS A AND B | DATE: 12/ 6/68

REVISIONS

| BEAM NO. | SIZE | TYPE | FY | SHAPE | PLATE 1 WIDTH | PLATE 1 THICK | PLATE 2 WIDTH | PLATE 2 THICK | DIMENSIONS LENGTH | DIMENSIONS DIM. A | SUPPORTS LEFT | SUPPORTS RIGHT | STUDS NO. | STUDS SIZE | REMARKS |
|---|---|---|---|---|---|---|---|---|---|---|---|---|---|---|---|
| 400 | - | 100 | 36 | 14B22 | - | - | - | - | - | - | 26.5K | 26.5K | - | - | |
| 401 | - | 100 | 36 | 12B19 | - | - | - | - | - | - | 235C | 335B | 13 | 3/4X8 | |
| 402 | - | 100 | 36 | 12WF27 | - | - | - | - | - | - | 26.5K | 26.5K | - | - | |
| 403 | - | 100 | 36 | 15CH33.9 | - | - | - | - | - | - | 315A | 315D | - | - | |
| 404 | - | 100 | 36 | 8B13 | - | - | - | - | - | - | 17.4K | 17.4K | - | - | |
| 405 | - | 100 | 36 | 15CH33.9 | - | - | - | - | - | - | 315A | 315D | - | - | X |
| 406 | - | 100 | 36 | 15CH33.9 | - | - | - | - | - | - | 315B | 315E | - | - | |
| 407 | - | 100 | 36 | 15CH33.9 | - | - | - | - | - | - | 315A | 315D | - | - | |
| 408 | 18X4 CH | 509 | 50 | 18CH58.0 | - | - | - | - | - | - | 232A | 246A | - | - | |
| 409 | - | 100 | 36 | 18CH42.7 | - | - | - | - | - | - | 410A | 411A | - | - | |
| 410 | 18X4 CH | 100 | 50 | 18CH45.8 | - | - | - | - | - | - | 246A | 355A | - | - | |
| 411 | - | 100 | 36 | 10CH25 | - | - | - | - | - | - | 355A | 249A | - | - | |
| 412 | 18X4 CH | 508 | 50 | 18CH42.7 | 2-7/8 | 1- 1/4 | - | - | 24FT 0 | 1FT 0 | 249A | 246A | - | - | |
| 413 | - | 100 | 36 | 18CH42.7 | - | - | - | - | - | - | 412A | 410A | - | - | |
| 414 | - | 100 | 50 | 18CH58.0 | - | - | - | - | - | - | 246A | 232A | - | - | |
| 415 | - | 100 | 50 | 18CH58.0 | - | - | - | - | - | - | 232A | 246A | - | - | |
| 416 | - | 100 | 36 | 18CH42.7 | - | - | - | - | - | - | 410A | 412A | - | - | |
| 417 | 18X4 CH | 501 | 50 | 18CH42.7 | 2-7/8 | 1- 1/4 | - | - | 24FT 0 | 1FT 0 | 246A | 249A | - | - | |
| 418 | - | 100 | 36 | 10CH25 | - | - | - | - | - | - | 249A | 249A | - | - | |
| 419 | 18X4 CH | 100 | 50 | 18CH45.8 | - | - | - | - | - | - | 249A | 246A | - | - | |
| 420 | - | 100 | 36 | 18CH42.7 | - | - | - | - | - | - | 411A | 410A | - | - | |
| 421 | 18X4 CH | 502 | 50 | 18CH58.0 | - | - | - | - | - | - | 246A | 232A | - | - | |
| 422 | 15X3-3/8CH | 505 | 50 | 15CH40.0 | 2-3/8 | 3/4 | - | - | FULL LENGTH | | 232A | 315B | - | - | |
| 423 | - | 100 | 36 | 15CH33.9 | - | - | - | - | - | - | 424A | 421A | - | - | |
| 424 | - | 100 | 36 | 15CH33.9 | - | - | - | - | - | - | 422A | 425A | - | - | |
| 425 | 15X3-3/8CH | 505 | 50 | 15CH40.0 | 2-3/8 | 3/4 | - | - | FULL LENGTH | | 315B | 232A | - | - | |
| 426 | 15X3-3/8CH | 505 | 50 | 15CH40.0 | 2-3/8 | 3/4 | - | - | FULL LENGTH | | 232A | 315A | - | - | |
| 427 | - | 100 | 36 | 15CH33.9 | - | - | - | - | - | - | 424A | 421A | - | - | |
| 428 | - | 100 | 36 | 15CH33.9 | - | - | - | - | - | - | 422A | 425A | - | - | |
| 429 | 15X3-3/8CH | 505 | 50 | 15CH40.0 | 2-3/8 | 3/4 | - | - | FULL LENGTH | | 315A | 232A | - | - | |
| 430 | - | 100 | 36 | 12B16.5 | - | - | - | - | - | - | 26.5K | 26.5K | - | - | |
| 431 | - | 100 | 36 | 14B22 | - | - | - | - | - | - | 26.5K | 26.5K | 24 | 3/4X3 | |
| 432 | - | 100 | 36 | 14B22 | - | - | - | - | - | - | 26.5K | 26.5K | 24 | 3/4X3 | |
| 433 | - | 100 | 36 | 14B22 | - | - | - | - | - | - | 283I | 26.5K | - | - | |

LICENSED PROFESSIONAL ENGINEER — LESLIE E. ROBERTSON — No. 34360 — UNIVERSITY OF THE STATE OF NEW YORK

**SKILLING, HELLE, CHRISTIANSEN, ROBERTSON** — **Structural & Civil Engineers**

PROJECT: THE WORLD TRADE CENTER | TITLE: BEAM SCHEDULE TOWERS A AND B | DATE: 12/ 6/68

REVISIONS

| BEAM NO. | SIZE | TYPE | FY | SHAPE | PLATE 1 WIDTH | PLATE 1 THICK | PLATE 2 WIDTH | PLATE 2 THICK | DIMENSIONS LENGTH | DIMENSIONS DIM. A | SUPPORTS LEFT | SUPPORTS RIGHT | STUDS NO. | STUDS SIZE | REMARKS |
|---|---|---|---|---|---|---|---|---|---|---|---|---|---|---|---|
| 434 | - | 100 | 36 | 16B26 | - | - | - | - | - | - | 308A | 335A | 27 | 3/4X3 | |
| 435 | - | 100 | 36 | 16B26 | - | - | - | - | - | - | 218A | 335A | 27 | 3/4X3 | |
| 436 | - | 100 | 36 | 14B22 | - | - | - | - | - | - | 263M | 170C | 18 | 3/4X3 | |
| * 437 | - | 100 | 36 | 14B22 | - | - | - | - | - | - | 26.5K | 26.5K | 24 | 3/4X3 | |
| 438 | - | 100 | 36 | 16WF36 | - | - | - | - | - | - | 220I | 364C | - | - | |
| 439 | - | 100 | 36 | 16WF36 | - | - | - | - | - | - | 364C | 303A | - | - | X |
| 440 | - | 100 | 36 | 12B19 | - | - | - | - | - | - | 501A | 26.5K | - | - | |
| 441 | - | 100 | 36 | 14B22 | - | - | - | - | - | - | 111H | 26.5K | - | - | |
| 442 | - | 100 | 36 | 14B22 | - | - | - | - | - | - | 283J | 303A | - | - | |
| 443 | - | 100 | 36 | 8B13 | - | - | - | - | - | - | 105A | 105A | - | - | |
| 444 | - | 100 | 36 | 16WF36 | - | - | - | - | - | - | 205I | 303A | - | - | 2 |
| 445 | - | 100 | 36 | 8B13 | - | - | - | - | - | - | 17.4K | 504A | - | - | |
| 446 | - | 100 | 36 | 8B13 | - | - | - | - | - | - | 504A | 365A | - | - | |
| 447 | - | 100 | 36 | 9CH13.4 | - | - | - | - | - | - | 366A | 501A | - | - | |
| 448 | - | 100 | 36 | 9CH13.4 | - | - | - | - | - | - | 501A | 363A | - | - | |
| 449 | - | 100 | 36 | 12B16.5 | - | - | - | - | - | - | 310B | 26.5K | 15 | 3/4X3C | |
| 450 | - | 100 | 36 | 12B16.5 | - | - | - | - | - | - | 26.5K | 26.5K | 15 | 3/4X3 | (3) |
| 451 | - | 100 | 36 | 12B19 | - | - | - | - | - | - | 26.5K | 26.5K | 36 | 5/8X2 | |
| 452 | - | 100 | 36 | 8B13 | - | - | - | - | - | - | 17.4K | 17.4K | 16 | 5/8X2 | |
| 453 | - | 100 | 36 | 14WF48.0 | - | - | - | - | - | - | 35.0K | 105I | 12 | 3/4X3B | |
| 454 | - | 100 | 36 | 16WF36 | - | - | - | - | - | - | 26.5K | 208C | 15 | 3/4X3B | |
| 455 | - | 100 | 50 | 8WF17 | - | - | - | - | - | - | 17.4K | 17.4K | 26 | 3/4X3 | |
| 456 | - | 100 | 50 | 8WF17 | - | - | - | - | - | - | 17.4K | 17.4K | 26 | 3/4X3 | |
| 457 | - | 100 | 36 | 16WF40 | - | - | - | - | - | - | 205F | 335C | - | - | 1 |
| 458 | - | 100 | 36 | 18WF45 | - | - | - | - | - | - | 26.5K | 352B | 12 | 3/4X4-1/2B | |
| 459 | - | 100 | 36 | 8B13 | - | - | - | - | - | - | 17.4K | 17.4K | 11 | 3/4X3 | |
| 460 | - | 100 | 36 | 14B22 | - | - | - | - | - | - | 201A | 26.5K | 16 | 3/4X3 | |
| 461 | - | 100 | 36 | 12B19 | - | - | - | - | - | - | 105A | 26.5K | 15 | 3/4X4-1/2C | |
| 462 | - | 100 | 36 | 16B26 | - | - | - | - | - | - | 105B | 105B | 8 | 3/4X3 | |
| 463 | - | 100 | 36 | 8B13 | - | - | - | - | - | - | 17.4K | 17.4K | 9 | 3/4X3 | |
| 464 | - | 100 | 36 | 8B13 | - | - | - | - | - | - | 17.4K | 17.4K | 9 | 3/4X3 | |
| 465 | - | 100 | 36 | 8B13 | - | - | - | - | - | - | 105A | 105A | 8 | 3/4X4-1/2 | |
| 466 | - | 100 | 50 | 16WF36 | - | - | - | - | - | - | 106A | 111I | 39 | 3/4X3 | |

REMARKS

1 DETAIL 405 RIGHT END OF BEAM
2 DETAIL 503A LEFT END OF BEAM
3 DELETE SHEER STUDS FLOOR 16 ONLY, Tower A.

* FOLD

LICENSED PROFESSIONAL ENGINEER — LESLIE E. ROBERTSON — No. 34360 — UNIVERSITY OF THE STATE OF NEW YORK

5-A81- 14

**SKILLING-HELLE-CHRISTIANSEN-ROBERTSON** **Civil & Structural Engineers**

PROJECT: THE WORLD TRADE CENTER | TITLE: BEAM SCHEDULE TOWERS A AND B | DATE: 1/22/68

REVISIONS

| BEAM NO. | SIZE | TYPE | FY | SHAPE | PLATE 1 WIDTH | PLATE 1 THICK | PLATE 2 WIDTH | PLATE 2 THICK | DIMENSIONS LENGTH | DIMENSIONS DIM. A | SUPPORTS LEFT | SUPPORTS RIGHT | STUDS NO. | STUDS SIZE | REMARKS |
|---|---|---|---|---|---|---|---|---|---|---|---|---|---|---|---|
| 467 | - | 100 | 36 | 8B13 | - | - | - | - | - | - | 17.7K | 17.7K | - | - | |
| 468 | - | 100 | 36 | 8B13 | - | - | - | - | - | - | 283K | 365A | - | - | |
| 469 | - | 100 | 36 | 8B13 | - | - | - | - | - | - | 17.7K | 504A | - | - | |
| 470 | - | 100 | 36 | 8B13 | - | - | - | - | - | - | 504A | 17.7K | - | - | |
| 471 | - | 100 | 36 | 10B19 | - | - | - | - | - | - | 17.7K | 17.7K | 15 | 3/4X3 | |
| 472 | - | 406 | 36 | 16B26 | - | - | - | - | - | - | 26.5K | 26.5K | 10 | 3/4X3B | X |
| 473 | - | 100 | 36 | 16WF36 | - | - | - | - | - | - | 26.5K | 208D | 15 | 3/4X3B | |
| 474 | 25X7 BU | 300 | 36 | - | 7 | 1- 1/2 | 22 | 3/4 | - | - | 44.2K | 44.2K | - | - | |
| 475 | 25X7 BU | 300 | 36 | - | 7 | 1- 1/2 | 22 | 3/4 | - | - | 44.2K | 174 | - | - | |
| 476 | - | 100 | 36 | 16WF40 | - | - | | - | - | - | 205F | 335C | - | - | 2 |
| 477 | - | 100 | 36 | 16WF40 | - | - | - | - | - | - | 220K | 205F | - | - | |
| 478 | - | 100 | 36 | 8B13 | - | - | - | - | - | - | 452 | 452 | - | - | |
| 479 | - | 100 | 36 | 16WF40 | - | - | - | - | - | - | 401A | 401A | - | - | |
| 480 | - | 100 | 36 | 8B13 | - | - | - | - | - | - | 17.4K | 17.4K | 11 | 3/4X3 | |
| 481 | 16X4 BX | 200 | 36 | - | 2-1/2 | 3/8 | 16 | 3/4 | - | - | 296A | 274A | - | - | |
| 482 | - | 100 | 36 | 16B26 | - | - | - | - | - | - | 201A | 283M | 8 | 3/4X3 | |
| 483 | - | 100 | 36 | 16WF36 | - | - | - | - | - | - | 26.5K | 208C | 12 | 3/4X3B | |
| 484 | - | 100 | 36 | 16B26 | - | - | - | - | - | - | 201F | 201F | 8 | 3/4X3 | |
| 485 | 16X4 BX | 200 | 50 | - | 2-1/2 | 3/8 | 16 | 3/4 | - | - | 296B | 274A | - | - | |
| 486 | - | 100 | 36 | 16WF40 | - | - | - | - | - | - | 205F | 220I | - | - | |
| 487 | - | 100 | 36 | 14B22 | - | - | - | - | - | - | 503A | 364C | - | - | |
| 488 | - | 100 | 36 | 12B19 | - | - | - | - | - | - | 26.5K | 26.5K | - | - | |
| 489 | - | 100 | 36 | 18I54.7 | - | - | - | - | - | - | 201B | 201C | - | - | |
| 490 | - | 100 | 36 | 16WF40 | - | - | - | - | - | - | 307C | 310B | - | - | 1 |
| 491 | - | 100 | 36 | 16WF40 | - | - | - | - | - | - | 402A | 402A | - | - | |
| 492 | - | 100 | 36 | 16WF40 | - | - | - | - | - | - | 205F | 220I | - | - | |
| 493 | - | 100 | 36 | 16WF40 | - | - | - | - | - | - | 307C | 310B | - | - | 1 |
| 494 | - | 100 | 36 | 16WF40 | - | - | - | - | - | - | 402A | 402A | - | - | |
| 495 | - | 100 | 36 | 16WF40 | - | - | - | - | - | - | 205F | 220I | - | - | |
| 496 | - | 100 | 36 | 16WF40 | - | - | - | - | - | - | 307C | 310B | - | - | 1 |
| 497 | - | 100 | 36 | 16WF40 | - | - | - | - | - | - | 402A | 402A | - | - | |
| 498 | - | 100 | 36 | 16WF40 | - | - | - | - | - | - | 205F | 220I | - | - | |
| 499 | - | 100 | 36 | 18WF45 | - | - | - | - | - | - | 105I | 213A | - | - | |

REMARKS

1 DETAIL 405 LEFT END OF BEAM
2 DETAIL 405 RIGHT END OF BEAM

LICENSED PROFESSIONAL ENGINEER LESLIE E. ROBERTSON No. 34360 UNIVERSITY OF THE STATE OF NEW YORK

**SKILLING-HELLE-CHRISTIANSEN-ROBERTSON** — **Civil & Structural Engineers**

PROJECT: THE WORLD TRADE CENTER | TITLE: BEAM SCHEDULE TOWERS A AND B | DATE: 1/22/68

REVISIONS

| BEAM NO. | SIZE | TYPE | FY | PLATE 1 SHAPE | PLATE 1 WIDTH | PLATE 1 THICK | PLATE 2 WIDTH | PLATE 2 THICK | DIMENSIONS LENGTH | DIMENSIONS DIM. A | SUPPORTS LEFT | SUPPORTS RIGHT | STUDS NO. | STUDS SIZE | REMARKS |
|---|---|---|---|---|---|---|---|---|---|---|---|---|---|---|---|
| 500 | - | 100 | 36 | 8B13 | - | - | - | - | - | - | 17.4K | 17.4K | 12 | 3/4X3 | |
| 501 | - | 100 | 50 | 14B22 | - | - | - | - | - | - | 26.5K | 26.5K | 19 | 3/4X3 | |
| 502 | - | 100 | 50 | 14B22 | - | - | - | - | - | - | 26.5K | 26.5K | 19 | 3/4X3 | |
| 503 | - | 100 | 36 | 8B13 | - | - | - | - | - | - | 17.4K | 17.4K | 10 | 3/4X3 | |
| 504 | - | 100 | 36 | 8B13 | - | - | - | - | - | - | 17.4K | 17.4K | 10 | 3/4X3 | |
| 505 | - | 404 | 36 | 16WF50 | - | - | - | - | - | - | 338D | 274A | 26 | 3/4X3 | |
| 506 | - | 100 | 50 | 16WF40 | - | - | - | - | - | - | 220I | 208C | 47 | 3/4X3 | |
| 507 | - | 100 | 36 | 14B22 | - | - | - | - | - | - | 26.5K | 26.5K | 16 | 3/4X3 | |
| 508 | - | 100 | 36 | 14B22 | - | - | - | - | - | - | 26.5K | 26.5K | 16 | 3/4X3 | |
| 509 | - | 100 | 36 | 8B13 | - | - | - | - | - | - | 17.4K | 17.4K | 10 | 3/4X3 | |
| 510 | - | 404 | 36 | 16WF50 | - | - | - | - | - | - | 274A | 282A | 26 | 3/4X3 | |
| 511 | - | 100 | 36 | 8B13 | - | - | - | - | - | - | 175A | 17.4K | - | - | |
| 512 | - | 100 | 36 | 16B26 | - | - | - | - | - | - | 368A | 335C | 19 | 3/4X3 | |
| 513 | - | 100 | 36 | 14B22 | - | - | - | - | - | - | 26.5K | 368A | 13 | 3/4X3 | |
| 514 | - | 100 | 36 | 12B16.5 | - | - | - | - | - | - | 26.5K | 26.5K | 13 | 3/4X3 | |
| 515 | - | 100 | 50 | 14B22 | - | - | - | - | - | - | 26.5K | 26.5K | 10 | 3/4X3 (B) | |
| 516 | - | 100 | 36 | 14B22 | - | - | - | - | - | - | 335C | 26.5K | 16 | 3/4X3 | |
| 517 | - | 100 | 50 | 16WF36 | - | - | - | - | - | - | 287E | 287E | 47 | 3/4X3 | |
| 518 | - | 100 | 50 | 16WF40 | - | - | - | - | - | - | 208C | 287E | 47 | 3/4X3 | |
| 519 | - | 100 | 50 | 16B26 | - | - | - | - | - | - | 216A | 335C | 19 | 3/4X3 | |
| 520 | - | 100 | 36 | 14B22 | - | - | - | - | - | - | 368A | 216A | 8 | 3/4X3 | |
| 521 | - | 100 | 36 | 8B13 | - | - | - | - | - | - | 111K | 105D | 9 | 3/4X3 | |
| 522 | - | 100 | 36 | 12B19 | - | - | - | - | - | - | 235C | 335G | 13 | 3/4X3 | |
| 523 | - | 100 | 50 | 16WF36 | - | - | - | - | - | - | 287E | 208C | 8 | 3/4X3 | |
| 524 | - | 100 | 36 | 14B22 | - | - | - | - | - | - | 26.5K | 26.5K | 10 | 3/4X3 (B) | |
| 525 | - | 100 | 36 | 16WF36 | - | - | - | - | - | - | 307J | 287E | 15 | 3/4X3 | |
| 526 | - | 100 | 50 | 16WF40 | - | - | - | - | - | - | 208C | 208C | 47 | 3/4X3 | |
| 527 | - | 100 | 36 | 12B19 | - | - | - | - | - | - | 26.5K | 26.5K | 18 | 3/4X3 | |
| 528 | - | 100 | 36 | 8B13 | - | - | - | - | - | - | 17.4K | 17.4K | 9 | 3/4X3 | |
| 529 | - | 404 | 36 | 16WF45 | - | - | - | - | - | - | 274A | 338D | 26 | 3/4X3 | |
| 530 | - | 100 | 50 | 16WF40 | - | - | - | - | - | - | 208C | 220I | 47 | 3/4X3 | |
| 531 | - | 100 | 36 | 12B16.5 | - | - | - | - | - | - | 32.0K | 26.5K | - | - | |
| 532 | - | 100 | 36 | 12B16.5 | - | - | - | - | - | - | 26.5K | 26.5K | - | - | |
| 533 | - | 100 | 50 | 14B22 | - | - | - | - | - | - | 26.5K | 26.5K | 20 | 3/4X3 | |

LICENSED PROFESSIONAL ENG. LESLIE E. ROBERTSON No. 34360 UNIVERSITY OF THE STATE OF NEW YORK

5-A81- 16

**SKILLING-HELLE-CHRISTIANSEN-ROBERTSON** — **Civil & Structural Engineers**

PROJECT: THE WORLD TRADE CENTER | TITLE: BEAM SCHEDULE TOWERS A AND B | DATE: 8/17/68

REVISIONS

| BEAM NO. | SIZE | TYPE | FY | SHAPE | PLATE 1 WIDTH | PLATE 1 THICK | PLATE 2 WIDTH | PLATE 2 THICK | DIMENSIONS LENGTH | DIMENSIONS DIM. A | SUPPORTS LEFT | SUPPORTS RIGHT | STUDS NO. | STUDS SIZE | REMARKS |
|---|---|---|---|---|---|---|---|---|---|---|---|---|---|---|---|
| 534 | - | 100 | 36 | 8B13 | - | - | - | - | - | - | 17.4K | 17.4K | 8 | 3/4X3 | |
| 535 | - | 100 | 50 | 16WF40 | - | - | - | - | - | - | 26.5K | 208C | 15 | 3/4X3B | |
| 536 | - | 100 | 36 | 16WF36 | - | - | - | - | - | - | 170B | 287E | 15 | 3/4X3B | |
| 537 | - | 100 | 36 | 16WF36 | - | - | - | - | - | - | 26.5K | 208C | 15 | 3/4X3B | |
| 538 | - | 100 | 36 | 16WF36 | - | - | - | - | - | - | 26.5K | 208C | 15 | 3/4X3B | |
| 539 | - | 100 | 36 | 12B19 | - | - | - | - | - | - | 335G | 235C | 13 | 3/4X3 | X |
| 540 | - | 100 | 36 | 18I54.7 | - | - | - | - | - | - | 335M | 235F | 13 | 3/4X3 | |
| 541 | - | 100 | 36 | 18WF77 | - | - | - | - | - | - | 812E | 390A | 42 | 3/4X3 | |
| 542 | - | 100 | 36 | 16B31 | - | - | - | - | - | - | 26.5K | 26.5K | - | - | |
| 543 | - | 100 | 36 | 16B31 | - | - | - | - | - | - | 254C | 335G | - | - | 3 |
| 544 | - | 100 | 36 | 16B31 | - | - | - | - | - | - | 335G | 254C | - | - | 4 |
| 545 | - | 100 | 36 | 16WF40 | - | - | - | - | - | - | 2201 | 205F | - | - | |
| 546 | - | 100 | 36 | 16WF40 | - | - | - | - | - | - | 402A | 402A | - | - | |
| 547 | - | 100 | 36 | 16WF40 | - | - | - | - | - | - | 205F | 335C | - | - | |
| 548 | - | 100 | 36 | 24I90.0 | | | | | - | - | 307J | 310B | - | - | |
| 549 | - | 100 | 36 | 16WF40 | - | - | - | - | - | - | 435B | 402A | - | - | |
| 550 | - | 100 | 36 | 16WF40 | - | - | - | - | - | - | 205F | 2201 | - | - | |
| 551 | - | 100 | 36 | 16WF40 | - | - | - | - | - | - | 220K | 205F | - | - | |
| 552 | - | 100 | 36 | 16WF40 | - | - | - | - | - | - | 401A | 401A | - | - | |
| 553 | - | 100 | 36 | 16WF40 | - | - | - | - | - | - | 205F | 335C | - | - | 1 |
| 554 | - | 100 | 36 | 16WF40 | - | - | - | - | - | - | 335C | 205F | - | - | 2 |
| 555 | - | 100 | 36 | 16WF40 | - | - | - | - | - | - | 401A | 401A | - | - | |
| 556 | - | 100 | 36 | 16WF40 | - | - | - | - | - | - | 205F | 220K | - | - | |
| 557 | - | 100 | 36 | 27WF94 | - | - | - | - | - | - | 237A | 317B | 46 | 3/4X3 | |
| 558 | - | 100 | 36 | 18WF60 | - | - | - | - | - | - | 419A | 414B | 28 | 3/4X3 | |
| 559 | - | 100 | 36 | 18WF60 | - | - | - | - | - | - | 414B | 419A | 30 | 3/4X3 | |
| 560 | - | 100 | 36 | 27WF94 | - | - | - | - | - | - | 317B | 237A | 46 | 3/4X3 | |
| 561 | - | 100 | 36 | 27WF94 | - | - | - | - | - | - | 237A | 317B | 46 | 3/4X3 | |
| 562 | - | 100 | 36 | 18WF60 | - | - | - | - | - | - | 419A | 414B | 28 | 3/4X3 | |
| 563 | - | 100 | 36 | 18WF60 | - | - | - | - | - | - | 414B | 419A | 30 | 3/4X3 | |
| 564 | - | 100 | 36 | 27WF94 | - | - | - | - | - | - | 317B | 237B | 44 | 3/4X3 | |
| 565 | - | 100 | 36 | 27WF84 | - | - | - | - | - | - | 237A | 251A | (64) | 3/4X3 | |
| 566 | - | 100 | 36 | 27WF84 | - | - | - | - | - | - | 430A | 430A | 30 | 3/4X3 | |

REMARKS

1 DETAIL 405 RIGHT END OF BEAM
2 DETAIL 405 LEFT END OF BEAM
3 DETAIL 406 RIGHT END OF BEAM
4 DETAIL 406 LEFT END OF BEAM

LICENSED PROFESSIONAL ENGINEER — LESLIE E. ROBERTSON — No. 34360 — UNIVERSITY OF THE STATE OF NEW YORK

5-AB1- 17

**SKILLING-HELLE-CHRISTIANSEN-ROBERTSON** — **Civil & Structural Engineers**

PROJECT: THE WORLD TRADE CENTER | TITLE: BEAM SCHEDULE TOWERS A AND B | DATE: 10/ 7/68

REVISIONS

| BEAM NO. | SIZE | TYPE | FY | SHAPE | PLATE 1 WIDTH | PLATE 1 THICK | PLATE 2 WIDTH | PLATE 2 THICK | DIMENSIONS LENGTH | DIMENSIONS DIM. A | SUPPORTS LEFT | SUPPORTS RIGHT | STUDS NO. | STUDS SIZE | REMARKS |
|---|---|---|---|---|---|---|---|---|---|---|---|---|---|---|---|
| 567 | - | 100 | 36 | 27WF84 | - | - | - | - | - | - | 251A | 482A | 50 | 3/4X3 | |
| 568 | - | 100 | 36 | 16WF36 | - | - | - | - | - | - | 208H | 276A | 8 | 3/4X3 | |
| 569 | 27X10WF | 402 | 36 | 27WF84 | 8 | 1/2 | - | - | 14FTO | - | 482C | 433A | 50 | 3/4X3 | |
| 570 | - | 421 | 36 | 27WF84 | - | - | - | - | - | - | 251C | 430A | 46 | 3/4X3 | 3 |
| 571 | - | 100 | 36 | 27WF84 | - | - | - | - | - | - | 251A | 237A | 48 | 3/4X3 | |
| 572 | - | 100 | 36 | 27WF84 | - | - | - | - | - | - | 237A | 251B | 64 | 3/4X3 | |
| 573 | - | 100 | 36 | 27WF84 | - | - | - | - | - | - | 430A | 430A | 30 | 3/4X3 | |
| 574 | - | 420 | 36 | 27WF84 | - | - | - | - | - | - | 251B | 473A | 50 | 3/4X3 | |
| 575 | - | 100 | 36 | 24179.9 | - | - | - | - | - | - | 390A | 234B | - | - | |
| 576 | - | 100 | 36 | 27WF84 | - | - | - | - | - | - | 482A | 251A | 50 | 3/4X3 | |
| 577 | - | 100 | 36 | 27WF84 | - | - | - | - | - | - | 430A | 430A | 30 | 3/4X3 | |
| 578 | - | 420 | 36 | 27WF84 | - | - | - | - | - | - | 251A | 237B | 48 | 3/4X3 | |
| 579 | - | 100 | 36 | 18WF60 | - | - | - | - | - | - | 317E | 317E | 26 | 3/4X3 | |
| 580 | - | 100 | 36 | 18WF60 | - | - | - | - | - | - | 317A | 317A | 34 | 3/4X3 | |
| 581 | - | 100 | 36 | 10WF21 | - | - | - | - | - | - | 17.7K | 111I | - | - | |
| 582 | - | 100 | 50 | 16WF40 | - | - | - | - | - | - | 335C | 205F | - | - | 1 |
| 583 | - | 100 | 36 | 16WF40 | - | - | - | - | - | - | 401A | 401A | - | - | |
| 584 | - | 100 | 36 | 8B13 | - | - | - | - | - | - | 17.4K | 17.4K | 11 | 3/4X3 | |
| 585 | - | 100 | 36 | 12B19 | - | - | - | - | - | - | 26.5K | 26.5K | 15 | 3/4X3 | |
| 586 | - | 100 | 36 | 16WF40 | - | - | - | - | - | - | 205F | 335C | - | - | 2 |
| 587 | - | 100 | 36 | 16WF36 | - | - | - | - | - | - | 26.5K | 208C | 15 | 3/4X3 | |
| 588 | - | 100 | 36 | 16WF40 | - | - | - | - | - | - | 220I | 205F | - | - | |
| 589 | - | 100 | 36 | 16WF40 | - | - | - | - | - | - | 402A | 402A | - | - | |
| 590 | - | 100 | 36 | 16WF40 | - | - | - | - | - | - | 205F | 335C | - | - | 2 |
| 591 | - | 100 | 36 | 12B16.5 | - | - | - | - | - | - | 175 | 26.5K | 13 | 3/4X3 | |
| 592 | - | 100 | 36 | 9CH13.4 | - | - | - | - | - | - | 17.4K | 17.4K | - | - | |
| 593 | - | 100 | 36 | 12B16.5 | - | - | - | - | - | - | 26.5K | 26.5K | - | - | |
| 594 | - | 100 | 36 | 8B13 | - | - | - | - | - | - | 111H | 111H | - | - | |
| 595 | - | 100 | 36 | 5CH9.0 | - | - | - | - | - | - | 366B | 501A | - | - | |
| 596 | - | 100 | 36 | 5CH9.0 | - | - | - | - | - | - | 501A | 366B | - | - | |
| 597 | - | 100 | 36 | 30WF108 | - | - | - | - | - | - | 44.2K | 44.2K | - | - | (5) |
| 598 | - | 100 | 36 | 8B13 | - | - | - | - | - | - | 17.4K | 17.4K | - | - | |
| 599 | - | 100 | 36 | 16WF36 | - | - | - | - | - | - | 303A | 205I | - | - | 4 |

REMARKS

1 DETAIL 405 LEFT END OF BEAM
2 DETAIL 405 RIGHT END OF BEAM
3 DETAIL 433A LEFT END OF BEAM
4 DETAIL 507 RIGHT END OF BEAM
5 TOWER A & B ELEV. 284. DETAIL 19-AB-912 FOR LEFT AND RIGHT SUPPORT

LICENSED PROFESSIONAL ENGINEER — LESLIE E. ROBERTSON — No. 34360 — UNIVERSITY OF THE STATE OF NEW YORK

5-AB1- 18

**SKILLING, HELLE, CHRISTIANSEN, ROBERTSON** — Structural & Civil Engineers

PROJECT: THE WORLD TRADE CENTER | TITLE: BEAM SCHEDULE TOWERS A AND B | DATE: 12/ 6/68

REVISIONS

| BEAM NO. | SIZE | TYPE | FY | SHAPE | PLATE 1 WIDTH | PLATE 1 THICK | PLATE 2 WIDTH | PLATE 2 THICK | DIMENSIONS LENGTH | DIMENSIONS DIM. A | SUPPORTS LEFT | SUPPORTS RIGHT | STUDS NO. | STUDS SIZE | REMARKS |
|---|---|---|---|---|---|---|---|---|---|---|---|---|---|---|---|
| 600 | - | 100 | 36 | 8B13 | - | - | - | - | - | - | 17.4K | 17.4K | - | - | |
| 601 | - | 100 | 36 | 14B22 | - | - | - | - | - | - | 283J | 303A | - | - | |
| 602 | - | 100 | 36 | 12B19 | - | - | - | - | - | - | 501A | 17.7K | - | - | |
| 603 | - | 100 | 36 | 14B22 | - | - | - | - | - | - | 111H | 178A | - | - | |
| 604 | - | 100 | 36 | 8B13 | - | - | - | - | - | - | 283K | 365A | - | - | |
| 605 | - | 100 | 36 | 8B13 | - | - | - | - | - | - | 111H | 111H | - | - | X |
| 606 | - | 100 | 36 | 8B13 | - | - | - | - | - | - | 365A | 504A | - | - | |
| 607 | - | 100 | 36 | 8B13 | - | - | - | - | - | - | 504A | 17.7K | - | - | |
| 608 | - | 100 | 36 | SCH9.0 | - | - | - | - | - | - | 363B | 501A | - | - | |
| 609 | - | 100 | 36 | SCH9.0 | - | - | - | - | - | - | 501A | 366B | - | - | |
| 610 | - | 100 | 36 | 16WF40 | - | - | - | - | - | - | 220I | 205F | - | - | |
| 611 | - | 100 | 36 | 16WF40 | - | - | - | - | - | - | 402A | 402A | - | - | |
| 612 | - | 100 | 36 | 16WF40 | - | - | - | - | - | - | 205F | 335C | - | - | 1 |
| 613 | - | 100 | 36 | 16WF40 | - | - | - | - | - | - | 220I | 205F | - | - | |
| 614 | - | 100 | 36 | 16WF40 | - | - | - | - | - | - | 402A | 402A | - | - | |
| 615 | - | 100 | 36 | 16WF40 | - | - | - | - | - | - | 205F | 335C | - | - | 1 |
| 616 | - | 100 | 36 | 8B13 | - | - | - | - | - | - | 17.4K | 17.4K | 9 | 3/4X3 | |
| 617 | - | 100 | 36 | 16WF40 | - | - | - | - | - | - | 220I | 205F | - | - | |
| 618 | - | 100 | 36 | 16WF40 | - | - | - | - | - | - | 402A | 402A | - | - | |
| 619 | - | 100 | 36 | 16WF40 | - | - | - | - | - | - | 205F | 335C | - | - | 1 |
| 620 | - | 100 | 36 | 16WF40 | - | - | - | - | - | - | 205F | 335C | - | - | 1 |
| 621 | - | 100 | 36 | 8B13 | - | - | - | - | - | - | 175A | 17.4K | - | - | |
| 622 | - | 100 | 36 | 8B13 | - | - | - | - | - | - | 17.4K | 17.4K | - | - | |
| 623 | - | 404 | 36 | 16WF45 | - | - | - | - | - | - | 26.5K | 278A | 26 | 3/4X3 | |
| 624 | - | 100 | 36 | 8B13 | - | - | - | - | - | - | 170G | 17.4K | - | - | |
| 625 | - | 100 | 36 | 12B19 | - | - | - | - | - | - | 111H | 26.5K | - | - | |
| 626 | - | 100 | 50 | 15CH50.0 | - | - | - | - | - | - | 315A | 232A | - | - | |
| 627 | - | 100 | 50 | 14B22 | - | - | - | - | - | - | 26.5K | 26.5K | 20 | 3/4X3 | |
| 628 | - | 100 | 36 | 12B19 | - | - | - | - | - | - | 26.5K | 26.5K | 13 | 3/4X3 | |
| 629 | - | 100 | 36 | 12B19 | - | - | - | - | - | - | 310B | 26.5K | 13 | 3/4X3 | |
| 630 | - | 100 | 36 | 16B26 | - | - | - | - | - | - | 235B | 335A | 19 | 3/4X3 | |
| 631 | 18X4 CH | 507 | 50 | 18CH51.9 | - | - | - | - | - | - | 236A | 245F | - | - | |
| 632 | 18X4 CH | 500 | 50 | 18CH51.9 | - | - | - | - | - | - | 245F | 236A | - | - | |
| 633 | 15X3-3/8CH | 504 | 50 | 15CH40.0 | 2-1/2 | 1/2 | - | - | 26FT 0 | 1FT 0 | 245F | 245E | - | - | |

REMARKS

1 DETAIL 405 RIGHT END OF BEAM
2 DETAIL 442A RIGHT END OF BEAM

LICENSED PROFESSIONAL ENGINEER — LESLIE E. ROBERTSON — No. 54360 — UNIVERSITY OF THE STATE OF NEW YORK

**SKILLING-HELLE-CHRISTIANSEN-ROBERTSON** — **Civil & Structural Engineers**

PROJECT: THE WORLD TRADE CENTER | TITLE: BEAM SCHEDULE TOWERS A AND B | DATE: 7/7/68

REVISIONS

| BEAM NO. | SIZE | TYPE | FY | PLATE 1 SHAPE | PLATE 1 WIDTH | PLATE 1 THICK | PLATE 2 WIDTH | PLATE 2 THICK | DIMENSIONS LENGTH | DIMENSIONS DIM. A | SUPPORTS LEFT | SUPPORTS RIGHT | STUDS NO. | STUDS SIZE | REMARKS |
|---|---|---|---|---|---|---|---|---|---|---|---|---|---|---|---|
| 634 | 15X3-3/8CH | 505 | 50 | 15CH40.0 | 2-1/2 | 1/2 | - | - | 26FT 1 | 1FT 0 | 245E | 245F | - | - | |
| 635 | - | 100 | 36 | 12B16.5 | - | - | - | - | - | - | 105L | 283U | 15 | 3/4X4-1/2 | |
| 636 | - | 100 | 36 | 12WF31 | - | - | - | - | - | - | 105L | 283U | 15 | 3/4X3 | |
| 637 | - | 100 | 36 | 14B22 | - | - | - | - | - | - | 342A | 370J | 16 | 3/4X3 | |
| 638 | - | 100 | 36 | 14B22 | - | - | - | - | - | - | 342A | 370J | 16 | 3/4X3 | |
| 639 | - | 100 | 36 | 14B22 | - | - | - | - | - | - | 283M | 26.5K | - | - | X |
| 640 | 16X4 BX | 200 | 36 | - | 2-1/2 | 3/8 | 16 | 3/4 | - | - | 296A | 274A | - | - | |
| 641 | - | 100 | 36 | 8B13 | - | - | - | - | - | - | 17.4K | 17.4K | 8 | 3/4X3 | |
| 642 | - | 100 | 36 | 16B26 | - | - | - | - | - | - | 201A | 283M | 8 | 3/4X38 | |
| 643 | 16X4 BX | 200 | 36 | - | 2-1/2 | 3/8 | 16 | 3/4 | - | - | 296A | 274A | - | - | |
| 644 | - | 100 | 36 | 14B22 | - | - | - | - | - | - | 283M | 170C | 18 | 3/4X3 | |
| 645 | - | 100 | 36 | 14B22 | - | - | - | - | - | - | 370A | 218A | 14 | 3/4X3 | (3) |
| 646 | 16X4 BX | 200 | 36 | - | 2-1/2 | 3/4 | 16 | 3/4 | - | - | 372A | 282B | - | - | |
| 647 | - | 100 | 36 | 12B19 | - | - | - | - | - | - | 26.5K | 26.5K | 15 | 3/4X3 | |
| 648 | - | 100 | 50 | 14B22 | - | - | - | - | - | - | 26.5K | 26.5K | 20 | 3/4X3 | |
| 649 | - | 100 | 50 | 14B22 | - | - | - | - | - | - | 26.5K | 26.5K | 34 | 3/4X3 | |
| 650 | - | 100 | 36 | 8B13 | - | - | - | - | - | - | 17.4K | 17.4K | - | - | |
| 651 | - | 100 | 36 | 14B22 | - | - | - | - | - | - | 26.5K | 368A | - | - | |
| 652 | - | 100 | 36 | 9CH13.4 | - | - | - | - | - | - | 17.4K | 17.4K | - | - | |
| 653 | - | 404 | 36 | 16WF50 | - | - | - | - | - | - | 26.5K | 274A | 26 | 3/4X3 | |
| 654 | - | 100 | 36 | 8B13 | - | - | - | - | - | - | 452A | 452A | 8 | 3/4X3 | |
| 655 | - | 100 | 36 | 8B13 | - | - | - | - | - | - | 17.4K | 17.4K | 8 | 3/4X3 | |
| 656 | - | 100 | 36 | 12B16.5 | - | - | - | - | - | - | 26.5K | 26.5K | - | - | |
| 657 | - | 100 | 36 | 8B13 | - | - | - | - | - | - | 17.4K | 17.4K | - | - | |
| 658 | - | 100 | 36 | 16B26 | - | - | - | - | - | - | 283M | 283M | 8 | 3/4X38 | |
| 659 | - | 100 | 36 | 14B22 | - | - | - | - | - | - | 368A | 218A | 11 | 3/4X3 | |
| 660 | - | 404 | 50 | 16WF78 | - | - | - | - | - | - | 338D | 453A | 20 | 3/4X3 | |
| 661 | - | 100 | 36 | 12B16.5 | - | - | - | - | - | - | 310B | 26.5K | 20 | 3/4X3 | |
| 662 | - | 404 | 50 | 16WF78 | - | - | - | - | - | - | 453A | 282B | 20 | 3/4X3 | |
| 663 | - | 100 | 36 | 18WF45 | - | - | - | - | - | - | 26.5K | 352A | 20 | 3/4X3 | |
| 664 | - | 100 | 36 | 12B16.5 | - | - | - | - | - | - | 26.5K | 26.5K | - | - | |
| 665 | - | 100 | 36 | 12B19 | - | - | - | - | - | - | 26.5K | 26.5K | - | - | |
| 666 | - | 100 | 36 | 8B13 | - | - | - | - | - | - | 17.4K | 17.4K | - | - | |

REMARKS

1 DETAIL 442A LEFT END OF BEAM

3 BEAM VOIDED, SEE 19-A-905

LICENSED PROFESSIONAL ENGINEER — LESLIE E. ROBERTSON — No. 34360 — UNIVERSITY OF THE STATE OF NEW YORK

5-A81- 20

**SKILLING, HELLE, CHRISTIANSEN, ROBERTSON** — Structural & Civil Engineers

PROJECT: THE WORLD TRADE CENTER | TITLE: BEAM SCHEDULE TOWERS A AND B | DATE: 12/ 6/68

REVISIONS

| BEAM NO. | SIZE | TYPE | FY | SHAPE | PLATE 1 WIDTH | PLATE 1 THICK | PLATE 2 WIDTH | PLATE 2 THICK | DIMENSIONS LENGTH | DIMENSIONS DIM. A | SUPPORTS LEFT | SUPPORTS RIGHT | STUDS NO. | STUDS SIZE | REMARKS |
|---|---|---|---|---|---|---|---|---|---|---|---|---|---|---|---|
| 667 | - | 100 | 36 | 8B13 | - | - | - | - | - | - | 17.4K | 17.4K | - | - | |
| 668 | - | 100 | 36 | 8B13 | - | - | - | - | - | - | 17.4K | 17.4K | - | - | |
| 669 | - | 100 | 36 | 8B13 | - | - | - | - | - | - | 17.4K | 17.4K | - | - | |
| 670 | - | 100 | 36 | 12B16.5 | - | - | - | - | - | - | 26.5K | 26.5K | - | - | |
| 671 | - | 100 | 36 | 10B15 | - | - | - | - | - | - | 17.4K | 17.4K | 12 | 3/4X3 | |
| 672 | 16X4 8X | 200 | 36 | - | 2-1/2 | 3/4 | 16 | 3/4 | - | - | 247F | 247C | - | - | X |
| 673 | - | 100 | 36 | 12B16.5 | - | - | - | - | - | - | 17.4K | 17.4K | 22 | 3/4X3 | |
| 674 | - | 100 | 36 | 16WF36 | - | - | - | - | - | - | 26.5K | 26.5K | - | - | |
| 675 | - | 100 | 36 | 16B26 | - | - | - | - | - | - | 111P | 283U | 28 | 3/4X3 | |
| 676 | - | 100 | 36 | 8B13 | - | - | - | - | - | - | 111K | 111K | 8 | 3/4X3 | |
| 677 | - | 100 | 36 | 12B16.5 | - | - | - | - | - | - | 310B | 26.5K | 20 | 3/4X3 | |
| 678 | - | 100 | 36 | 12B16.5 | - | - | - | - | - | - | 26.5K | 26.5K | 22 | 3/4X3E | |
| 679 | - | 100 | 36 | 16WF36 | - | - | - | - | - | - | 26.5K | 105B | 15 | 3/4X3B | |
| 680 | - | 100 | 36 | 16WF36 | - | - | - | - | - | - | 26.5K | 208C | 12 | 3/4X3B | |
| 681 | - | 100 | 36 | 16WF36 | - | - | - | - | - | - | 26.5K | 208C | 39 | 3/4X3B | |
| 682 | - | 100 | 36 | 12B16.5 | - | - | - | - | - | - | 26.5K | 26.5K | 15 | 3/4X3 | |
| 683 | - | 100 | 36 | 8B13 | - | - | - | - | - | - | 17.4K | 17.4K | - | - | |
| 684 | - | 100 | 36 | 12B16.5 | - | - | - | - | - | - | 26.5K | 26.5K | - | - | |
| 685 | - | 100 | 36 | 10WF21 | - | - | - | - | - | - | 111I | 17.4K | - | - | |
| 686 | 16X5-1/2BX | 201 | 36 | - | 4 | 3/8 | 16 | 3/4 | - | - | 254B | 206B | - | - | |
| 687 | - | 100 | 36 | 12B16.5 | - | - | - | - | - | - | 26.5K | 26.5K | 15 | 3/4X3 | |
| 688 | - | 100 | 36 | 8B13 | - | - | - | - | - | - | 17.4K | 17.4K | - | - | |
| 689 | - | 100 | 36 | 14B22 | - | - | - | - | - | - | 208B | 216A | 10 | 3/4X3 | |
| 690 | - | 100 | 36 | 12B16.5 | - | - | - | - | - | - | 310B | 26.5K | 14 | 3/4X3C | |
| 691 | - | 100 | 36 | 12B16.5 | - | - | - | - | - | - | 26.5K | 26.5K | - | - | |
| 692 | 16X5-1/2BX | 204 | 36 | - | 4 | 3/8 | 16 | 3/4 | - | - | 206A | 254C | - | - | |
| 693 | - | 100 | 36 | 16WF36 | - | - | - | - | - | - | 26.5K | 26.5K | - | - | |
| 694 | - | 100 | 36 | 8B13 | - | - | - | - | - | - | 214A | 215A | 11 | 3/4X3 | |
| 695 | - | 100 | 36 | 9CH13.4 | - | - | - | - | - | - | 17.4K | 17.4K | - | - | |
| 696 | - | 100 | 36 | 8B13 | - | - | - | - | - | - | 17.4K | 17.4K | 8 | 3/4X3 | |
| 697 | - | 100 | 36 | 12B16.5 | - | - | - | - | - | - | 26.5K | 26.5K | 15 | 3/4X3 | |
| 698 | - | 100 | 36 | 14B22 | - | - | - | - | - | - | 26.5K | 26.5K | 10 | 3/4X3B | |
| 699 | - | 100 | 50 | 16WF36 | - | - | - | - | - | - | 106B | 111I | 39 | 3/4X3 | |

LICENSED PROFESSIONAL ENGINEER — LESLIE E. ROBERTSON — No. 34360 — UNIVERSITY OF THE STATE OF NEW YORK

**SKILLING, HELLE, CHRISTIANSEN, ROBERTSON** — Structural & Civil Engineers

PROJECT: THE WORLD TRADE CENTER | TITLE: BEAM SCHEDULE TOWERS A AND B | DATE: 12/ 6/68

REVISIONS

| BEAM NO. | SIZE | TYPE | FY | SHAPE | PLATE 1 WIDTH | PLATE 1 THICK | PLATE 2 WIDTH | PLATE 2 THICK | DIMENSIONS LENGTH | DIMENSIONS DIM. A | SUPPORTS LEFT | SUPPORTS RIGHT | STUDS NO. | STUDS SIZE | REMARKS |
|---|---|---|---|---|---|---|---|---|---|---|---|---|---|---|---|
| 700 | - | 100 | 36 | 12B16.5 | - | - | - | - | - | - | 17.4K | 17.4K | 16 | 3/4X3E | |
| 701 | - | 404 | 50 | 16WF78 | - | - | - | - | - | - | 26.5K | 453A | 20 | 3/4X3 | |
| 702 | - | 100 | 36 | 12WF50 | - | - | - | - | - | - | 26.5K | 26.5K | - | - | |
| 703 | 18X4 CH | 509 | 50 | 18CH45.8 | - | - | - | - | - | - | 232A | 246A | - | - | |
| 704 | - | 100 | 36 | 18CH42.7 | - | - | - | - | - | - | 410A | 411A | - | - | |
| 705 | 18X4 CH | 100 | 50 | 18CH42.7 | - | - | - | - | - | - | 246A | 249A | - | - | |
| 706 | - | 100 | 36 | 10CH25 | - | - | - | - | - | - | 249A | 249A | - | - | |
| 707 | 18X4 CH | 508 | 50 | 18CH42.7 | 2-7/8 | 7/8 | - | - | 24FT 0 | 1FT 0 | 249A | 246A | - | - | |
| 708 | - | 100 | 36 | 18CH42.7 | - | - | - | - | - | - | 412A | 410A | - | - | |
| 709 | - | 100 | 50 | 18CH45.8 | - | - | - | - | - | - | 246A | 232A | - | - | |
| 710 | - | 100 | 50 | 18CH45.8 | - | - | - | - | - | - | 232A | 246A | - | - | |
| 711 | - | 100 | 36 | 18CH42.7 | - | - | - | - | - | - | 410A | 412A | - | - | |
| 712 | 18X4 CH | 501 | 36 | 18CH42.7 | 2-7/8 | 7/8 | - | - | 24FT 0 | 1FT 0 | 246A | 249A | - | - | |
| 713 | - | 100 | 36 | 10CH25 | - | - | - | - | - | - | 249A | 249A | - | - | |
| 714 | 18X4 CH | 100 | 50 | 18CH42.7 | - | - | - | - | - | - | 249A | 246A | - | - | |
| 715 | - | 100 | 36 | 18CH42.7 | - | - | - | - | - | - | 411A | 410A | - | - | |
| 716 | 18X4 CH | 502 | 50 | 18CH45.8 | - | - | - | - | - | - | 246A | 232A | - | - | |
| 717 | - | 404 | 50 | 16WF78 | - | - | - | - | - | - | 453A | 338D | 20 | 3/4X3 | |
| 718 | 16X5-1/2BX | 206 | 36 | - | 3-3/4 | 3/8 | 16 | 7/8 | - | - | 464 | 464 | - | - | |
| 719 | 16X5-1/2BX | 206 | 36 | - | 3-3/4 | 3/8 | 16 | 7/8 | - | - | 206A | 254A | - | - | |
| 720 | - | 100 | 36 | 14B22 | - | - | - | - | - | - | 235B | 335A | 19 | 3/4X3 | |
| 721 | - | 100 | 36 | 16WF40 | - | - | - | - | - | - | 307C | 310B | - | - | 1 |
| 722 | - | 100 | 36 | 16WF40 | - | - | - | - | - | - | 402A | 402A | - | - | |
| 723 | - | 100 | 36 | 16WF40 | - | - | - | - | - | - | 205F | 220I | - | - | |
| 724 | - | 100 | 36 | 12B16.5 | - | - | - | - | - | - | 310B | 32.5K | 15 | 3/4X3C | |
| 725 | - | 100 | 36 | 16WF36 | - | - | - | - | - | - | 26.5K | 26.5K | - | - | |
| 726 | - | 100 | 50 | 16WF36 | - | - | - | - | - | - | 106B | 111I | 39 | 3/4X3D | |
| 727 | 16X5-1/2BX | 207 | 36 | - | 3-3/4 | 3/8 | 16 | 7/8 | - | - | 254B | 247C | - | - | |
| 728 | - | 100 | 36 | 8CH11.5 | - | - | - | - | - | - | 17.4K | 392A | - | - | |
| 729 | 16X5-1/2BX | 204 | 36 | - | 4 | 3/8 | 16 | 3/4 | - | - | 206A | 294D | - | - | |
| 730 | - | 100 | 36 | 9CH13.4 | - | - | - | - | - | - | 363A | 363A | - | - | |
| 731 | - | 100 | 50 | 16WF50 | - | - | - | - | - | - | 106A | 106B | 48 | 3/4X3 | |
| 732 | 16X5-1/2BX | 203 | 36 | - | 3-3/4 | 3/8 | 16 | 7/8 | - | - | 464 | 464 | - | - | |
| 733 | 16X5-1/2BX | 203 | 36 | - | 3-3/4 | 3/8 | 16 | 7/8 | - | - | 254B | 206B | - | - | |

REMARKS

1 DETAIL 405 LEFT END OF BEAM

LICENSED PROFESSIONAL ENGINEER ★ LESLIE E. ROBERTSON ★ No. 34360 ★ UNIVERSITY OF THE STATE OF NEW YORK

**SKILLING-HELLE-CHRISTIANSEN-ROBERTSON** — **Civil & Structural Engineers**

PROJECT: THE WORLD TRADE CENTER | TITLE: BEAM SCHEDULE TOWERS A AND B | DATE: 1/22/68

REVISIONS

| BEAM NO. | SIZE | TYPE | FY | PLATE 1 SHAPE | PLATE 1 WIDTH | PLATE 1 THICK | PLATE 2 WIDTH | PLATE 2 THICK | DIMENSIONS LENGTH | DIMENSIONS DIM. A | SUPPORTS LEFT | SUPPORTS RIGHT | STUDS NO. | STUDS SIZE | REMARKS |
|---|---|---|---|---|---|---|---|---|---|---|---|---|---|---|---|
| 734 | - | 100 | 36 | 14B26 | - | - | - | - | - | - | 201F | 170C | - | - | |
| 735 | - | 100 | 36 | 14B22 | - | - | - | - | - | - | 26.5K | 26.5K | 21 | 3/4X3 | |
| 736 | - | 100 | 36 | 8B13 | - | - | - | - | - | - | 111K | 105C | - | - | |
| 737 | - | 100 | 36 | 16WF45 | - | - | - | - | - | - | 26.5K | 287F | 23 | 3/4X3 | |
| 738 | - | 100 | 50 | 15CH50.0 | - | - | - | - | - | - | 232A | 315A | - | - | |
| 739 | - | 404 | 50 | 16WF45 | - | - | - | - | - | - | 274B | 338D | (26) | 3/4X3 | X |
| 740 | - | 100 | 36 | 8B13 | - | - | - | - | - | - | 17.4K | 17.4K | - | - | |
| 741 | - | 100 | 36 | 8B13 | - | - | - | - | - | - | 17.4K | 17.4K | - | - | |
| 742 | - | 100 | 36 | 8B13 | - | - | - | - | - | - | 170G | 17.4K | - | - | |
| 743 | 18X4 CH | 516 | 50 | 18CH42.7 | 2-7/8 | 7/8 | - | - | 22FT 4 | 1FT 0 | 249A | 246B | - | - | |
| 744 | - | 100 | 36 | 16WF40 | - | - | - | - | - | - | 307C | 310B | - | - | ? |
| 745 | - | 100 | 36 | 16WF40 | - | - | - | - | - | - | 402A | 402A | - | - | |
| 746 | - | 100 | 36 | 16WF40 | - | - | - | - | - | - | 205F | 220I | - | - | |
| 747 | - | 100 | 36 | 8CH11.5 | - | - | - | - | - | - | 392A | 17.4K | - | - | |
| 748 | - | 100 | 36 | 16B31 | - | - | - | - | - | - | 294D | 335J | - | - | 1 |
| 749 | - | 100 | 36 | 16B26 | - | - | - | - | - | - | 307D | 111P | 15 | 3/4X3 | |
| 750 | - | 100 | 36 | 15CH33.9 | - | - | - | - | - | - | 315B | 315E | - | - | |
| 751 | 30X9 BX | 251 | 36 | - | 9 | 1 | 28 | 3/8 | - | - | 347A | 347A | - | - | |
| 752 | - | 100 | 36 | 16B26 | - | - | - | - | - | - | 474A | 474A | - | - | |
| 753 | - | 100 | 36 | 16WF45 | - | - | - | - | - | - | 170B | 287F | 23 | 3/4X3 | |
| 754 | - | 100 | 36 | 15CH33.9 | - | - | - | - | - | - | 315B | 315E | - | - | |
| 755 | - | 100 | 36 | 16WF40 | - | - | - | - | - | - | 220I | 368B | 39 | 3/4X3 | |
| 756 | - | 100 | 36 | 16WF45 | - | - | - | - | - | - | 106D | 106D | (10) | 3/4X3 | |
| 757 | - | 100 | 36 | 14B22 | - | - | - | - | - | - | 310C | 26.5K | 21 | 3/4X3 | |
| 758 | - | 100 | 36 | 16WF45 | - | - | - | - | - | - | 307D | 287F | 23 | 3/4X3 | |
| 759 | - | 100 | 36 | 8B13 | - | - | - | - | - | - | 214A | 215A | 8 | 3/4X3 | |
| 760 | - | 100 | 36 | 8B13 | - | - | - | - | - | - | 360A | 215A | 8 | 3/4X3 | |
| 761 | - | 100 | 36 | 16WF45 | - | - | - | - | - | - | 26.5K | 287F | 23 | 3/4X3 | |
| 762 | - | 100 | 36 | 8B13 | - | - | - | - | - | - | 17.4K | 17.4K | - | - | |
| 763 | - | 100 | 36 | 8B13 | - | - | - | - | - | - | 17.4K | 17.4K | - | - | |
| 764 | - | 100 | 36 | 8B13 | - | - | - | - | - | - | 172C | 17.4K | - | - | |
| 765 | - | 100 | 36 | 16WF45 | - | - | - | - | - | - | 26.5K | 287F | 21 | 3/4X3 | |
| 766 | - | 404 | 36 | 16WF45 | - | - | - | - | - | - | 26.5K | 278A | (26) | 3/4X3 | |

REMARKS

1 DETAIL 406 RIGHT END OF BEAM
2 DETAIL 405 LEFT END OF BEAM

LICENSED PROFESSIONAL ENGINEER — LESLIE E. ROBERTSON — No. 34360 — UNIVERSITY OF THE STATE OF NEW YORK

REVISIONS

**SKILLING-HELLE-CHRISTIANSEN-ROBERTSON** — Civil & Structural Engineers

PROJECT: THE WORLD TRADE CENTER | TITLE: BEAM SCHEDULE TOWERS A AND B | DATE: 1/22/68

| BEAM NO. | SIZE | TYPE | FY | SHAPE | PLATE 1 WIDTH | PLATE 1 THICK | PLATE 2 WIDTH | PLATE 2 THICK | DIMENSIONS LENGTH | DIMENSIONS DIM. A | SUPPORTS LEFT | SUPPORTS RIGHT | STUDS NO. | STUDS SIZE | REMARKS |
|---|---|---|---|---|---|---|---|---|---|---|---|---|---|---|---|
| 767 | - | 100 | 36 | 16WF40 | - | - | - | - | - | - | 276A | 352B | 39 | 3/4X3 (J) | |
| 768 | 16X4 BX | 200 | 36 | - | 2-1/2 | 3/8 | 16 | 3/4 | - | - | 296B | 274A | - | - | |
| 769 | - | 100 | 36 | 8B13 | - | - | - | - | - | - | 17.4K | 17.4K | - | - | |
| 770 | - | 100 | 36 | 8CH11.5 | - | - | - | - | - | - | 17.4K | 17.4K | - | - | |
| 771 | - | 100 | 36 | 8CH11.5 | - | - | - | - | - | - | 17.4K | 17.4K | - | - | |
| 772 | - | 100 | 36 | 16WF40 | - | - | - | - | - | - | 307C | 310B | - | - | 1X |
| 773 | - | 100 | 36 | 16WF40 | - | - | - | - | - | - | 402A | 402A | - | - | |
| 774 | - | 100 | 36 | 16WF40 | - | - | - | - | - | - | 205F | 2201 | - | - | |
| 775 | - | 100 | 50 | 16WF36 | - | - | - | - | - | - | 106A | 106B | 54 | 3/4X3 | |
| 776 | - | 100 | 50 | 16WF36 | - | - | - | - | - | - | 106B | 111I | 39 | 3/4X3 | |
| 777 | - | 100 | 36 | 8B13 | - | - | - | - | - | - | 17.4K | 17.4K | 8 | 3/4X3 | |
| 778 | - | 100 | 36 | 8B13 | - | - | - | - | - | - | 17.4K | 17.4K | - | - | |
| 779 | - | 100 | 36 | 14B22 | - | - | - | - | - | - | 216A | 335D | 24 | 3/4X3 | |
| 780 | - | 100 | 36 | 12B16.5 | - | - | - | - | - | - | 26.5K | 26.5K | 10 | 3/4X3 (B) | |
| 781 | - | 404 | 36 | 16WF45 | - | - | - | - | - | - | 26.5K | 26.5K | 26 | 3/4X3 | |
| 782 | - | 100 | 36 | 16WF40 | - | - | - | - | - | - | 276A | 26.5K | 39 | 3/4X3 (J) | |
| 783 | - | 100 | 50 | 12CH45.0 | - | - | - | - | - | - | 427B | 426A | - | - | |
| 784 | - | 100 | 36 | 15CH33.9 | - | - | - | - | - | - | 315B | 315E | - | - | |
| 785 | 21X7 BU | 300 | 36 | - | 7 | 1 | 19 | 5/8 | - | - | 324A | 317D | - | - | 2 |
| 786 | - | 100 | 50 | 12CH45 | - | - | - | - | - | - | 429A | 426A | - | - | |
| 787 | - | 100 | 36 | 15CH33.9 | - | - | - | - | - | - | 315A | 315D | - | - | |
| 788 | - | 100 | 36 | 15CH33.9 | - | - | - | - | - | - | 422A | 423A | - | - | |
| 789 | - | 100 | 50 | 15CH40.0 | - | - | - | - | - | - | 315A | 232B | - | - | |
| 790 | 21X7 BU | 300 | 36 | - | 7 | 1 | 19 | 5/8 | - | - | 324A | 317D | - | - | 3 |
| 791 | - | 100 | 50 | 12WF50 | - | - | - | - | - | - | 435C | 435B | - | - | |
| 792 | - | 100 | 36 | 21WF55 | - | - | - | - | - | - | 317D | 381A | - | - | |
| 793 | - | 100 | 36 | 21WF55 | - | - | - | - | - | - | 381A | 439A | - | - | |
| 794 | - | 100 | 36 | 24WF76 | - | - | - | - | - | - | 317C | 321A | - | - | |
| 795 | - | 100 | 50 | 12WF50 | - | - | - | - | - | - | 370I | 313A | - | - | |
| 796 | - | 100 | 36 | 18CH45.8 | - | - | - | - | - | - | 410A | 411A | - | - | |
| 797 | 18X4 CH | 509 | 50 | 18CH58.0 | - | - | - | - | - | - | 233A | 245A | - | - | |
| 798 | 18X4 CH | 100 | 50 | 18CH45.8 | - | - | - | - | - | - | 245A | 255A | - | - | |
| 799 | 18X4 CH | 508 | 50 | 18CH45.8 | 2-3/4 | 1 | - | - | 24FT 0 | 1FT 0 | 255A | 245A | - | - | |

REMARKS

1 DETAIL 405 LEFT END OF BEAM
2 RIGHT END OF BEAM NOTCHED, SEE DETAIL 427B
3 RIGHT END OF BEAM NOTCHED, SEE DETAIL 435C

LICENSED PROFESSIONAL ENGINEER — LESLIE E. ROBERTSON — No. 34360 — STATE OF NEW YORK

**SKILLING-HELLE-CHRISTIANSEN-ROBERTSON** — **Civil & Structural Engineers**

PROJECT: THE WORLD TRADE CENTER | TITLE: BEAM SCHEDULE TOWERS A AND B | DATE: 1/22/68

REVISIONS

| BEAM NO. | SIZE | TYPE | FY | SHAPE | PLATE 1 WIDTH | PLATE 1 THICK | PLATE 2 WIDTH | PLATE 2 THICK | DIMENSIONS LENGTH | DIMENSIONS DIM. A | SUPPORTS LEFT | SUPPORTS RIGHT | STUDS NO. | STUDS SIZE | REMARKS |
|---|---|---|---|---|---|---|---|---|---|---|---|---|---|---|---|
| 800 | - | 100 | 50 | 18CH58.0 | - | - | - | - | - | - | 245A | 233A | - | - | |
| 801 | 18X4 CH | 509 | 50 | 18CH51.9 | - | - | - | - | - | - | 232B | 246B | - | - | |
| 802 | - | 100 | 50 | 18CH45.8 | - | - | - | - | - | - | 410A | 393B | - | - | |
| 803 | - | 100 | 36 | 15CH40.0 | - | - | - | - | - | - | 393B | 460B | - | - | |
| 804 | 15X3-3/8CH | 511 | 36 | 15CH40.0 | - | - | - | - | - | - | 460A | 393A | - | - | |
| 805 | 18X4 CH | 514 | 50 | 18CH45.8 | - | - | - | - | - | - | 393A | 410A | - | - | |
| 806 | - | 100 | 50 | 18CH51.9 | - | - | - | - | - | - | 246B | 321A | - | - | |
| 807 | 21X7 BU | 300 | 36 | - | 7 | 1 | 19 | 5/8 | - | - | 324A | 317D | - | - | |
| 808 | 21X7 BU | 300 | 36 | - | 7 | 1 | 19 | 5/8 | - | - | 324A | 317D | - | - | |
| 809 | 20X9 BX | 250 | 36 | - | 9 | 7/8 | 18-1/4 | 3/8 | - | - | 304A | 347A | - | - | |
| 810 | - | 100 | 36 | 15CH33.9 | - | - | - | - | - | - | 315A | 315D | - | - | |
| 811 | - | 100 | 36 | 15CH33.9 | - | - | - | - | - | - | 472A | 423A | - | - | |
| 812 | - | 100 | 50 | 15CH40.0 | - | - | - | - | - | - | 315A | 232B | - | - | |
| 813 | 20X9 BX | 250 | 36 | - | 9 | 7/8 | 18-1/4 | 3/8 | - | - | 304A | 347A | - | - | |
| 814 | - | 100 | 36 | 15CH33.9 | - | - | - | - | - | - | 315A | 315D | - | - | |
| 815 | - | 100 | 36 | 15CH33.9 | - | - | - | - | - | - | 422A | 423A | - | - | |
| 816 | - | 100 | 50 | 15CH40.0 | - | - | - | - | - | - | 315A | 232B | - | - | |
| 817 | - | 100 | 36 | 15CH33.9 | - | - | - | - | - | - | 351A | 315D | - | - | |
| 818 | - | 100 | 36 | 15CH33.9 | - | - | - | - | - | - | 351A | 315D | - | - | |
| 819 | - | 100 | 36 | 16B26 | - | - | - | - | - | - | 307I | 111Q | - | - | |
| 820 | - | 100 | 36 | 12B19 | - | - | - | - | - | - | 335B | 301B | 15 | 3/4X3 | 1 |
| 821 | - | 100 | 36 | 16B26 | - | - | - | - | - | - | 201F | 201B | 8 | 3/4X3 | |
| 822 | - | 100 | 36 | 16B31 | - | - | - | - | - | - | 335H | 254B | - | - | |
| 823 | 18X4 CH | 509 | 50 | 18CH45.8 | - | - | - | - | - | - | 232B | 246B | - | - | |
| 824 | - | 100 | 36 | 18CH42.7 | - | - | - | - | - | - | 410A | 411A | - | - | |
| 825 | 18X4 CH | 100 | 50 | 18CH42.7 | - | - | - | - | - | - | 246B | 249B | - | - | |
| 826 | - | 100 | 36 | 10CH25 | - | - | - | - | - | - | 249B | 249B | - | - | |
| 827 | 18X4 CH | 508 | 50 | 18CH42.7 | 2-7/8 | 7/8 | - | - | 24FT 0 | 1FT 0 | 249B | 246B | - | - | |
| 828 | - | 100 | 36 | 18CH42.7 | - | - | - | - | - | - | 412A | 410A | - | - | |
| 829 | - | 100 | 50 | 18CH45.8 | - | - | - | - | - | - | 246B | 232B | - | - | |
| 830 | 30X7 BU | 320 | 36 | - | 5 | 2 | 26 | 5/8 | - | - | 3340 | 283Q | - | - | |
| 831 | - | 100 | 36 | 8B13 | - | - | - | - | - | - | 303 | 283 | - | - | |
| 832 | - | 100 | 50 | 18CH45.8 | - | - | - | - | - | - | 322A | 246A | - | - | |
| 833 | - | 100 | 36 | 14B22 | - | - | - | - | - | - | 301B | 26.5K | (B) | 3/4X3(C) | |

REMARKS

1. DET 3358 APPLIES TO 12B19 ONLY.

LICENSED PROFESSIONAL ENGINEER — LESLIE E. ROBERTSON — No. 34360 — UNIVERSITY OF THE STATE OF N.Y.

**SKILLING-HELLE-CHRISTIANSEN-ROBERTSON** — **Civil & Structural Engineers**

PROJECT: THE WORLD TRADE CENTER | TITLE: BEAM SCHEDULE TOWERS A AND B | DATE: 1/22/68

REVISIONS

| BEAM NO. | SIZE | TYPE | FY | SHAPE | PLATE 1 WIDTH | PLATE 1 THICK | PLATE 2 WIDTH | PLATE 2 THICK | DIMENSIONS LENGTH | DIMENSIONS DIM. A | SUPPORTS LEFT | SUPPORTS RIGHT | STUDS NO. | STUDS SIZE | REMARKS |
|---|---|---|---|---|---|---|---|---|---|---|---|---|---|---|---|
| 834 | - | 100 | 36 | 12WF36 | - | - | - | - | - | - | 26.5K | 287D | - | - | |
| 835 | - | 100 | 36 | 12WF27 | - | - | - | - | - | - | 287B | 287D | - | - | |
| 836 | - | 100 | 36 | 12WF36 | - | - | - | - | - | - | 287F | 287B | - | - | |
| 837 | 18X4 CH | 502 | 50 | 18CH45.8 | - | - | - | - | - | - | 246A | 322A | - | - | |
| 838 | 16X5-1/2BX | 206 | 36 | - | 3-3/4 | 3/8 | 16 | 7/8 | - | - | 464 | 464 | - | - | X |
| 839 | 16X5-1/2BX | 206 | 36 | - | 3-3/4 | 3/8 | 16 | 7/8 | - | - | 206A | 294D | - | - | |
| 840 | 16X5-1/2BX | 207 | 36 | - | 3-3/4 | 3/8 | 16 | 7/8 | - | - | 294D | 247G | - | - | |
| 841 | 16X5-1/2BX | 207 | 36 | - | 3-3/4 | 3/8 | 16 | 7/8 | - | - | 464 | 464 | - | - | |
| 842 | 16X5-1/2BX | 208 | 36 | - | 3-3/4 | 3/8 | 16 | 7/8 | - | - | 294D | 247G | - | - | |
| 843 | 16X5-1/2BX | 208 | 36 | - | 3-3/4 | 3/8 | 16 | 7/8 | - | - | 464 | 464 | - | - | |
| 844 | - | 601 | 36 | 6BX21.9 | - | - | - | - | - | - | 451 | 451 | - | - | 1 |
| 845 | - | 100 | 36 | 14WF74 | - | - | - | - | - | - | 370I | 317D | - | - | |
| 846 | - | 100 | 36 | 14WF74 | - | - | - | - | - | - | 370I | 317D | - | - | |
| 847 | - | 100 | 36 | 8B13 | - | - | - | - | - | - | 17.4K | 17.4K | 12 | 3/4X3 | |
| 848 | - | 100 | 36 | 16B31 | - | - | - | - | - | - | 335A | 235E | 19 | 3/4X3 | |
| 849 | - | 100 | 36 | 16B31 | - | - | - | - | - | - | 335A | 235E | 19 | 3/4X3 | |
| 850 | - | 100 | 36 | 14B22 | - | - | - | - | - | - | 26.5K | 26.5K | - | - | |
| 851 | - | 100 | 36 | 16WF64 | - | - | - | - | - | - | 220F | 287F | 33 | 3/4X3 | |
| 852 | - | 100 | 36 | 16WF64 | - | - | - | - | - | - | 287F | 287F | 33 | 3/4X3 | |
| 853 | - | 100 | 36 | 16WF36 | - | - | - | - | - | - | 287F | 287F | 24 | 3/4X3 | |
| 854 | - | 100 | 36 | 16WF36 | - | - | - | - | - | - | 287F | 287F | 13 | 3/4X3 | |
| 855 | - | 100 | 36 | 16WF64 | - | - | - | - | - | - | 287F | 287F | 35 | 3/4X3 | |
| 856 | - | 100 | 36 | 16WF64 | - | - | - | - | - | - | 287F | 220H | 33 | 3/4X3 | |
| 857 | - | 100 | 36 | 12WF31 | - | - | - | - | - | - | 310D | 26.5K | - | - | |
| 858 | - | 100 | 50 | 18CH45.8 | - | - | - | - | - | - | 324A | 246B | - | - | |
| 859 | - | 100 | 36 | 8B13 | - | - | - | - | - | - | 201E | 201E | - | - | |
| 860 | - | 100 | 36 | 21WF62 | - | - | - | - | - | - | 35.3K | 35.3K | - | - | |
| 861 | - | 100 | 36 | 12B19 | - | - | - | - | - | - | 26.5K | 26.5K | - | - | |
| 862 | - | 100 | 36 | 14B22 | - | - | - | - | - | - | 364C | 503A | - | - | |
| 863 | - | 100 | 36 | 14B22 | - | - | - | - | - | - | 201E | 503A | - | - | 2 |
| 864 | - | 100 | 36 | 14B22 | - | - | - | - | - | - | 111H | 503A | - | - | 2 |
| 865 | - | 100 | 50 | 24WF76 | - | - | - | - | - | - | 317E | 237D | 36 | 3/4X3 | |
| 866 | - | 100 | 50 | 24WF76 | - | - | - | - | - | - | 345A | 237C | - | - | |

REMARKS

1 STANDARD STRUCTURAL TUBING 6X4X3/8

2 RIGHT END OF BEAM SITS ON POST

LICENSED PROFESSIONAL ENGINEER — LESLIE E. ROBERTSON — No. 34360 — STATE OF NEW YORK

**SKILLING-HELLE-CHRISTIANSEN-ROBERTSON** — Civil & Structural Engineers

PROJECT: THE WORLD TRADE CENTER | TITLE: BEAM SCHEDULE TOWERS A AND 8 | DATE: 4/17/68

REVISIONS

| BEAM NO. | SIZE | TYPE | FY | SHAPE | PLATE 1 WIDTH | PLATE 1 THICK | PLATE 2 WIDTH | PLATE 2 THICK | DIMENSIONS LENGTH | DIMENSIONS DIM. A | SUPPORTS LEFT | SUPPORTS RIGHT | STUDS NO. | STUDS SIZE | REMARKS |
|---|---|---|---|---|---|---|---|---|---|---|---|---|---|---|---|
| 867 | - | 100 | 50 | 24WF68 | - | - | - | - | - | - | 430A | 430A | 22 | 3/4X3 | |
| 868 | - | 100 | 50 | 24WF68 | - | - | - | - | - | - | 381A | 345A | 24 | 3/4X3 | |
| 869 | - | 100 | 50 | 24WF68 | - | - | - | - | - | - | 430A | 430A | 20 | 3/4X3 | |
| 870 | - | 100 | 50 | 24WF68 | - | - | - | - | - | - | 430A | 430A | 20 | 3/4X3 | |
| 871 | - | 100 | 50 | 24WF76 | - | - | - | - | - | - | 237C | 317E | 36 | 3/4X3 | |
| 872 | - | 100 | 50 | 27WF84 | - | - | - | - | - | - | 237C | 251E | 38 | 3/4X3 | |
| 873 | - | 100 | 50 | 27WF84 | - | - | - | - | - | - | 430A | 430A | 24 | 3/4X3 | |
| 874 | - | 100 | 50 | 27WF84 | - | - | - | - | - | - | 251E | 482B | 38 | 3/4X3 | |
| 875 | - | 100 | 36 | 24WF84 | - | - | - | - | - | - | 482B | 482B | 10 | 3/4X3 | |
| 876 | - | 100 | 50 | 27WF84 | - | - | - | - | - | - | 482B | 251E | 38 | 3/4X3 | |
| 877 | - | 100 | 50 | 27WF84 | - | - | - | - | - | - | 430A | 430A | 24 | 3/4X3 | |
| 878 | - | 408 | 50 | 27WF84 | - | - | - | - | - | - | 251E | 237D | 38 | 3/4X3 | |
| 879 | - | 100 | 50 | 27WF84 | - | - | - | - | - | - | 237C | 251E | 38 | 3/4X3 | |
| 880 | - | 100 | 50 | 18WF85 | - | - | - | - | - | - | 433B | 433B | 18 | 3/4X3 | |
| 881 | - | 100 | 50 | 27WF94 | - | - | - | - | - | - | 251E | 482B | 42 | 3/4X3 | |
| 882 | - | 100 | 36 | 24WF84 | - | - | - | - | - | - | 482B | 482B | 10 | 3/4X3 | |
| 883 | - | 100 | 50 | 27WF84 | - | - | - | - | - | - | 482B | 251E | 38 | 3/4X3 | |
| 884 | - | 100 | 50 | 27WF84 | - | - | - | - | - | - | 430A | 430A | 24 | 3/4X3 | |
| 885 | - | 100 | 50 | 27WF84 | - | - | - | - | - | - | 251E | 237C | 38 | 3/4X3 | |
| 886 | - | 100 | 50 | 16WF40 | - | - | - | - | - | - | 205P | 220S | - | - | |
| 887 | - | 100 | 36 | 8CH11.5 | - | - | - | - | - | - | 17.4K | 17.4K | - | - | |
| 888 | 16X5-1/2 BX | 204 | 36 | - | 4 | 3/8 | 16 | 3/4 | - | - | 206A | 254C | | - | |
| 889 | - | 100 | 36 | 16831 | - | - | - | - | - | - | 254B | 220D | - | - | |
| 890 | - | 100 | 36 | 16831 | - | - | - | - | - | - | 254E | 254B | - | - | |
| 891 | 36X9 BU | 300 | 36 | - | 9 | 1-1/2 | 38 | 3/4 | - | - | 209B | 254E | - | - | 1 |
| 892 | - | 100 | 50 | 16831 | - | - | - | - | - | - | 254B | 335B | - | - | |
| 893 | - | 100 | 36 | 16831 | - | - | - | - | - | - | 254B | 254B | - | - | |
| 894 | - | 402 | 36 | 16831 | 4 | 1/4 | - | - | - | - | 220D | 254B | - | - | |
| 895 | - | 402 | 36 | 16831 | 4 | 1/4 | - | - | - | - | 254C | 220D | - | - | |
| 896 | - | 100 | 36 | 16831 | - | - | - | - | - | - | 254C | 254C | - | - | |
| 897 | - | 100 | 50 | 16831 | - | - | - | - | - | - | 335B | 254C | - | - | 2 |
| 898 | - | 100 | 50 | 16831 | - | - | - | - | - | - | 254C | 335B | - | - | 1 |
| 899 | - | 100 | 36 | 16831 | - | - | - | - | - | - | 254C | 254C | - | - | |

REMARKS

1 SEE DETAIL 209B RIGHT END OF BEAM

LICENSED PROFESSIONAL ENGINEER LESLIE E. ROBERTSON No. 34360 STATE OF NEW YORK

**SKILLING, HELLE, CHRISTIANSEN, ROBERTSON** — Structural & Civil Engineers

PROJECT: THE WORLD TRADE CENTER | TITLE: BEAM SCHEDULE TOWERS A AND B | DATE: 1/10/69

REVISIONS

| BEAM NO. | SIZE | TYPE | FY | PLATE 1 SHAPE | PLATE 1 WIDTH | PLATE 1 THICK | PLATE 2 WIDTH | PLATE 2 THICK | DIMENSIONS LENGTH | DIMENSIONS DIM. A | SUPPORTS LEFT | SUPPORTS RIGHT | STUDS NO. | STUDS SIZE | REMARKS |
|---|---|---|---|---|---|---|---|---|---|---|---|---|---|---|---|
| 900 | - | 100 | 36 | 16B31 | - | - | - | - | - | - | 220D | 254C | - | - | |
| 901 | - | 100 | 50 | 18WF64 | - | - | - | - | - | - | 283V | 359B | - | - | |
| 902 | - | 100 | 50 | 18WF64 | - | - | - | - | - | - | 361B | 456B | - | - | |
| 903 | - | 100 | 50 | 18WF64 | - | - | - | - | - | - | 283V | 456B | - | - | |
| 904 | - | 100 | 50 | 18WF64 | - | - | - | - | - | - | 201D | 456B | - | - | |
| 905 | - | 100 | 50 | 18WF64 | - | - | - | - | - | - | 361B | 456B | - | - | X |
| 906 | - | 100 | 36 | 6B16 | - | - | - | - | - | - | 510A | 510A | - | - | |
| 907 | - | 100 | 36 | 16WF40 | - | - | - | - | - | - | 283 | 26.5K | - | - | |
| 908 | - | 100 | 50 | 18WF85 | - | - | - | - | - | - | 456B | 456B | - | - | |
| 909 | - | 100 | 50 | 18WF64 | - | - | - | - | - | - | 456B | 456B | - | - | |
| 910 | - | 100 | 36 | 16WF40 | - | - | - | - | - | - | 26.5K | 26.5K | - | - | |
| 911 | - | 600 | 36 | 6BX21.9 | - | - | - | - | - | - | 451 | 451 | - | - | 1 |
| 912 | 16X5-1/2BX | 204 | 36 | - | 4 | 3/8 | 16 | 3/4 | - | - | 206B | 254B | - | - | |
| 913 | - | 100 | 50 | 10WF45 | - | - | - | - | - | - | 357D | 361B | - | - | |
| 914 | - | 100 | 50 | 10WF45 | - | - | - | - | - | - | 357D | 275A | - | - | |
| 915 | - | 100 | 50 | 10WF45 | - | - | - | - | - | - | 357D | 361B | - | - | |
| 916 | - | 100 | 50 | 10WF45 | - | - | - | - | - | - | 283R | 283R | - | - | |
| 917 | - | 100 | 50 | 10WF45 | - | - | - | - | - | - | 201I | 201E | - | - | |
| 918 | - | 100 | 36 | 16WF36 | - | - | - | - | - | - | 208C | 352A | 39 | 3/4X3J | |
| 919 | - | 100 | 50 | 10WF45 | - | - | - | - | - | - | 357D | 362A | - | - | |
| 920 | - | 100 | 50 | 10WF39 | - | - | - | - | - | - | 283R | 283R | - | - | |
| 921 | - | 100 | 50 | 14WF53 | - | - | - | - | - | - | 456F | 456B | - | - | |
| 922 | - | 100 | 50 | 14WF53 | - | - | - | - | - | - | 456F | 456B | - | - | |
| 923 | - | 100 | 50 | 18WF64 | - | - | - | - | - | - | 283V | 345A | - | - | |
| 924 | - | 100 | 36 | 18WF45 | - | - | - | - | - | - | 170E | 286B | 8 | 3/4X3B | |
| 925 | - | 100 | 36 | 18WF60 | - | - | - | - | - | - | 26.5K | 26.5K | - | - | |
| 926 | - | 100 | 50 | 16B26 | - | - | - | - | - | - | 26.5K | 26.5K | 22 | 3/4X3 | |
| 927 | - | 100 | 50 | 16B26 | - | - | - | - | - | - | 26.5K | 26.5K | 22 | 3/4X3 | |
| 928 | - | 100 | 50 | 14B22 | - | - | - | - | - | - | 26.5K | 26.5K | 20 | 3/4X3 | |
| 929 | - | 100 | 50 | 14B22 | - | - | - | - | - | - | 26.5K | 26.5K | 20 | 3/4X3 | |
| 930 | - | 100 | 50 | 14B22 | - | - | - | - | - | - | 26.5K | 26.5K | 20 | 3/4X3 | |
| 931 | - | 100 | 50 | 14B22 | - | - | - | - | - | - | 26.5K | 26.5K | 20 | 3/4X3 | |
| 932 | - | 100 | 50 | 14B22 | - | - | - | - | - | - | 26.5K | 26.5K | 20 | 3/4X3 | |
| 933 | - | 100 | 50 | 14B22 | - | - | - | - | - | - | 26.5K | 26.5K | 20 | 3/4X3 | |

REMARKS

1 STANDARD STRUCTURAL TUBING 6X4X3/8

* HOLD

LICENSED PROFESSIONAL ENGINEER — LESLIE E. ROBERTSON — No. 34360 — STATE OF NEW YORK

**SKILLING-HELLE-CHRISTIANSEN-ROBERTSON** — Civil & Structural Engineers

PROJECT: THE WORLD TRADE CENTER | TITLE: BEAM SCHEDULE TOWERS A AND B | DATE: 4/17/68

REVISIONS

| BEAM NO. | SIZE | TYPE | FY | PLATE 1 SHAPE | PLATE 1 WIDTH | PLATE 1 THICK | PLATE 2 WIDTH | PLATE 2 THICK | DIMENSIONS LENGTH | DIMENSIONS DIM. A | SUPPORTS LEFT | SUPPORTS RIGHT | STUDS NO. | STUDS SIZE | REMARKS |
|---|---|---|---|---|---|---|---|---|---|---|---|---|---|---|---|
| 934 | - | 100 | 36 | 8B13 | - | - | - | - | - | - | 17.4K | 17.4K | 12 | 3/4X3 | |
| 935 | - | 100 | 36 | 18WF60 | - | - | - | - | - | - | 317A | 317A | 34 | 3/4X3 | |
| 936 | - | 100 | 36 | 8B13 | - | - | - | - | - | - | 17.4K | 17.4K | 12 | 3/4X3 | |
| 937 | - | 100 | 36 | 8B13 | - | - | - | - | - | - | 17.4K | 17.4K | 12 | 3/4X3 | |
| 938 | - | 100 | 36 | 8B13 | - | - | - | - | - | - | 17.4K | 17.4K | 12 | 3/4X3 | |
| 939 | - | 100 | 36 | 8B13 | - | - | - | - | - | - | 17.4K | 17.4K | 12 | 3/4X3 | X |
| 940 | - | 100 | 36 | 8B13 | - | - | - | - | - | - | 17.4K | 17.4K | 12 | 3/4X3 | |
| 941 | - | 100 | 36 | 8B13 | - | - | - | - | - | - | 17.4K | 17.4K | 12 | 3/4X3 | |
| 942 | - | 100 | 50 | 14B22 | - | - | - | - | - | - | 26.5K | 26.5K | 16 | 3/4X3 | |
| 943 | - | 100 | 50 | 14B22 | - | - | - | - | - | - | 26.5K | 26.5K | 16 | 3/4X3 | |
| 944 | - | 100 | 50 | 16WF58 | - | - | - | - | - | - | 26.5K | 368E | 16 | 3/4X3 | |
| 945 | - | 100 | 36 | 18WF45 | - | - | - | - | - | - | 26.5K | 368F | 16 | 3/4X3 | |
| 946 | - | 100 | 36 | 18WF60 | - | - | - | - | - | - | 317A | 317A | 34 | 3/4X3 | |
| 947 | - | 100 | 36 | 8B13 | - | - | - | - | - | - | 17.4K | 17.4K | - | - | |
| 948 | - | 100 | 36 | 16B31 | - | - | - | - | - | - | 254B | 335G | - | - | 1 |
| 949 | - | 100 | 36 | 14B22 | - | - | - | - | - | - | 26.5K | 26.5K | 22 | 3/4X3 | |
| 950 | - | 100 | 50 | 16WF58 | - | - | - | - | - | - | 170E | 211B | 30 | 3/4X3 | |
| 951 | - | 100 | 50 | 12B19 | - | - | - | - | - | - | 335C | 26.5K | 16 | 3/4X3C | |
| 952 | - | 100 | 50 | 16WF36 | - | - | - | - | - | - | 335N | 357C | 16 | 3/4X3 | |
| 953 | - | 100 | 36 | 18I54.7 | - | - | - | - | - | - | 537A | 398A | 16 | 3/4X3 | |
| 954 | - | 100 | 50 | 12B16.5 | - | - | - | - | - | - | 105A | 26.5K | 26 | 3/4X3 | |
| 955 | - | 100 | 50 | 16B26 | - | - | - | - | - | - | 288M | 172B | - | - | |
| 956 | - | 100 | 50 | 16B26 | - | - | - | - | - | - | 208B | 209A | 20 | 3/4X3 | |
| 957 | - | 406 | 50 | 16B26 | - | - | - | - | - | - | 216A | 209A | 20 | 3/4X3 | |
| 958 | - | 100 | 50 | 14B26 | - | - | - | - | - | - | 201B | 170C | 20 | 3/4X3 | |
| 959 | - | 100 | 36 | 8B13 | - | - | - | - | - | - | 283M | 283M | - | - | |
| 960 | - | 100 | 36 | 16B26 | - | - | - | - | - | - | 26.5K | 208B | 12 | 3/4X3 | |
| 961 | - | 100 | 36 | 8B13 | - | - | - | - | - | - | 105D | 105D | 12 | 3/4X3 | |
| 962 | - | 100 | 36 | 8B13 | - | - | - | - | - | - | 201H | 201A | 12 | 3/4X3 | |
| 963 | - | 100 | 36 | 8B13 | - | - | - | - | - | - | 17.4K | 17.4K | 12 | 3/4X3 | |
| 964 | - | 100 | 36 | 8B13 | - | - | - | - | - | - | 17.4K | 17.4K | 12 | 3/4X3 | |
| 965 | - | 100 | 36 | 8B13 | - | - | - | - | - | - | 17.4K | 17.4K | 12 | 3/4X3 | |
| 966 | - | 100 | 36 | 9CH13.4 | - | - | - | - | - | - | 17.4K | 17.4K | - | - | |

REMARKS

1 DETAIL 406 RIGHT END OF BEAM

LICENSED PROFESSIONAL ENGINEER — LESLIE E. ROBERTSON — No. 34360 — UNIVERSITY OF THE STATE OF NEW YORK

**SKILLING-HELLE-CHRISTIANSEN-ROBERTSON** — Civil & Structural Engineers

PROJECT: THE WORLD TRADE CENTER | TITLE: BEAM SCHEDULE TOWERS A AND B | DATE: 4/17/68

REVISIONS

| BEAM NO. | SIZE | TYPE | FY | SHAPE | PLATE 1 WIDTH | PLATE 1 THICK | PLATE 2 WIDTH | PLATE 2 THICK | DIMENSIONS LENGTH | DIMENSIONS DIM. A | SUPPORTS LEFT | SUPPORTS RIGHT | STUDS NO. | STUDS SIZE | REMARKS |
|---|---|---|---|---|---|---|---|---|---|---|---|---|---|---|---|
| 967 | - | 100 | 36 | 8B13 | - | - | - | - | - | - | 214A | 215A | 12 | 3/4X3 | |
| 968 | - | 406 | 50 | 16B26 | - | - | - | - | - | - | 208B | 216A | 8 | 3/4X3 | |
| 969 | - | 412 | 36 | 24I100 | - | - | - | - | - | - | 345A | 407B | - | - | |
| 970 | - | 100 | 36 | 24I100 | - | - | - | - | - | - | 205K | 409B | - | - | |
| 971 | - | 100 | 36 | 24I100 | - | - | - | - | - | - | 205J | 209A | - | - | |
| 972 | - | 100 | 36 | 24I100 | - | - | - | - | - | - | 209A | 205J | 60 | 3/4X3 | |
| 973 | - | 100 | 36 | 24I100 | - | - | - | - | - | - | 409B | 205L | - | - | |
| 974 | - | 411 | 36 | 24I100 | - | - | - | - | - | - | 407B | 359B | - | - | |
| 975 | - | 100 | 50 | 24WF68 | - | - | - | - | - | - | 358A | 275A | 30 | 3/4X3 | |
| 976 | - | 100 | 50 | 24WF76 | - | - | - | - | - | - | 361B | 111R | 30 | 3/4X3 | |
| 977 | - | 100 | 50 | 24WF94 | - | - | - | - | - | - | 106H | 361B | 30 | 3/4X3 | |
| 978 | - | 100 | 50 | 24WF76 | - | - | - | - | - | - | 362A | 111T | 30 | 3/4X3 | |
| 979 | - | 100 | 50 | 21WF62 | - | - | - | - | - | - | 220H | 368E | 30 | 3/4X3 | |
| 980 | - | 100 | 50 | 24WF76 | - | - | - | - | - | - | 368E | 211B | 30 | 3/4X3 | |
| 981 | - | 100 | 50 | 21WF62 | - | - | - | - | - | - | 398A | 368F | 30 | 3/4X3 | |
| 982 | - | 100 | 50 | 21WF62 | - | - | - | - | - | - | 368F | 220H | 30 | 3/4X3 | |
| 983 | - | 100 | 50 | 16WF36 | - | - | - | - | - | - | 211B | 26.5K | 15 | 3/4X3 | |
| 984 | - | 100 | 50 | 16WF36 | - | - | - | - | - | - | 26.5K | 398A | 8 | 3/4X3 | |
| 985 | - | 100 | 50 | 16WF40 | - | - | - | - | - | - | 220S | 205P | - | - | |
| 986 | - | 100 | 50 | 16WF40 | - | - | - | - | - | - | 402A | 402A | - | - | |
| 987 | - | 100 | 50 | 16WF40 | - | - | - | - | - | - | 205F | 335C | - | - | 2 |
| 988 | 24X78U | 300 | 36 | - | SEE REMARKS | | 22 | 1/2 | - | - | 335N | 310J | - | - | 1,3 (4) |
| 989 | - | 100 | 50 | 16WF40 | - | - | - | - | - | - | 402A | 402A | - | - | |
| 990 | - | 100 | 36 | 8B13 | - | - | - | - | - | - | 17.4K | 17.4K | 12 | 3/4X3 | |
| 991 | - | 100 | 36 | 8B13 | - | - | - | - | - | - | 17.4K | 17.4K | 12 | 3/4X3 | |
| 992 | - | 100 | 36 | 8B13 | - | - | - | - | - | - | 17.4K | 17.4K | 12 | 3/4X3 | |
| 993 | - | 100 | 50 | 8B13 | - | - | - | - | - | - | 17.4K | 17.4K | 12 | 3/4X3 | |
| 994 | - | 100 | 50 | 14B22 | - | - | - | - | - | - | 209A | 335B | 34 | 3/4X3 | |
| 995 | - | 100 | 50 | 14B22 | - | - | - | - | - | - | 335B | 235C | 15 | 3/4X3 | |
| 996 | - | 100 | 36 | 33WF118 | - | - | - | - | - | - | 209B | 335N | - | - | |
| 997 | 16X5-1/2 BX | 201 | 36 | - | 4 | 3/8 | 16 | 3/4 | - | - | 254B | 206B | - | - | |
| 998 | - | 100 | 36 | 36WF150 | - | - | - | - | - | - | 253.0K | 537A | - | - | |
| 999 | - | 100 | 36 | 8B13 | - | - | - | - | - | - | 17.4K | 17.4K | 12 | 3/4X3 | |

REMARKS

1. DETAIL 405 LEFT END OF BEAM
2. DETAIL 405 RIGHT END OF BEAM
3. SEE 6-A82-36 FOR TROLLEY BEAM SUPPORT
4. 7X 1 PL FOR TOP FLANGE,
   7X 1-1/2 PL FOR BOTTOM FLANGE

LICENSED PROFESSIONAL ENGINEER — LESLIE E. ROBERTSON — No. 34360 — UNIVERSITY OF THE STATE OF NEW YORK

**SKILLING-HELLE-CHRISTIANSEN-ROBERTSON** — **Civil & Structural Engineers**

PROJECT: THE WORLD TRADE CENTER | TITLE: BEAM SCHEDULE TOWERS A AND B | DATE: 1/22/68

REVISIONS

| BEAM NO. | SIZE | TYPE | FY | PLATE 1 SHAPE | PLATE 1 WIDTH | PLATE 1 THICK | PLATE 2 WIDTH | PLATE 2 THICK | DIMENSIONS LENGTH | DIMENSIONS DIM. A | SUPPORTS LEFT | SUPPORTS RIGHT | STUDS NO. | STUDS SIZE | REMARKS |
|---|---|---|---|---|---|---|---|---|---|---|---|---|---|---|---|
| 1000 | 16X5-1/2BX | 204 | 36 | - | 4 | 3/8 | 16 | 3/4 | - | - | 206A | 254C | - | - | |
| 1001 | - | 100 | 36 | 16B26 | - | - | - | - | - | - | 26.5K | 26.5K | 24 | 3/4X3 | |
| 1002 | - | 100 | 36 | 16B26 | - | - | - | - | - | - | 26.5K | 26.5K | 24 | 3/4X3 | |
| 1003 | - | 100 | 36 | 16B26 | - | - | - | - | - | - | 105L | 26.5K | 24 | 3/4X3 | |
| 1004 | - | 100 | 36 | 16B26 | - | - | - | - | - | - | 26.5K | 26.5K | 24 | 3/4X3 | |
| 1005 | - | 100 | 50 | 21WF55 | - | - | - | - | - | - | 106I | 111S | 51 | 3/4X3 (D) | X |
| 1006 | - | 100 | 50 | 21WF55 | - | - | - | - | - | - | 106I | 111S | 70 | 3/4X3 | |
| 1007 | - | 100 | 36 | 8B13 | - | - | - | - | - | - | 214A | 215A | 8 | 3/4X3 | |
| 1008 | - | 100 | 36 | 8B13 | - | - | - | - | - | - | 175A | 17.4K | 11 | 3/4X3 | |
| 1009 | - | 100 | 36 | 8B13 | - | - | - | - | - | - | 17.4K | 17.4K | - | - | |
| 1010 | - | 100 | 36 | 16WF36 | - | - | - | - | - | - | 310F | 26.5K | 20 | 3/4X3 | |
| 1011 | - | 100 | 36 | 8B13 | - | - | - | - | - | - | 17.4K | 17.4K | 8 | 3/4X3 | |
| 1012 | - | 100 | 36 | 16WF40 | - | - | - | - | - | - | 205F | 220I | - | - | |
| 1013 | - | 100 | 36 | 10WF21 | - | - | - | - | - | - | 172B | 369A | - | - | |
| 1014 | - | 100 | 36 | 14B22 | - | - | - | - | - | - | 235C | 335B | 16 | 3/4X3 | |
| 1015 | - | 100 | 36 | 14B22 | - | - | - | - | - | - | 335B | 235C | 16 | 3/4X3 | |
| 1016 | - | 100 | 36 | 6WF20 | - | - | - | - | - | - | 17.4K | 17.4K | - | - | |
| 1017 | - | 100 | 50 | 14B22 | - | - | - | - | - | - | 335B | 235D | 16 | 3/4X3 | |
| 1018 | - | 100 | 36 | 16WF50 | - | - | - | - | - | - | 26.5K | 26.5K | 20 | 3/4X3 | |
| 1019 | - | 100 | 36 | 14B22 | - | - | - | - | - | - | 26.5K | 208B | 9 | 3/4X3 | |
| 1020 | - | 100 | 36 | 16B26 | - | - | - | - | - | - | 201F | 201B | 9 | 3/4X3 | |
| 1021 | - | 100 | 36 | 8B13 | - | - | - | - | - | - | 105D | 105D | 9 | 3/4X3 | |
| 1022 | - | 100 | 36 | 8B13 | - | - | - | - | - | - | 17.4K | 17.4K | - | - | |
| 1023 | - | 100 | 36 | 16B26 | - | - | - | - | - | - | 418B | 418B | - | - | 1 |
| 1024 | - | 100 | 36 | 18WF60 | - | - | - | - | - | - | 111S | 106I | 41 | 3/4X3 (D) | |
| 1025 | - | 100 | 36 | 12CM20.7 | - | - | - | - | - | - | 26.5K | 26.5K | - | - | |
| 1026 | - | 100 | 36N | 8B13C | - | - | - | - | - | - | 111N | 105C | - | - | |
| 1027 | - | 100 | 36L | 14B22 | - | - | - | - | - | - | 105L | 26.5K | 22 | 3/4X3 | |
| 1028 | - | 100 | 36 | 16B26 | - | - | - | - | - | - | 26.5K | 26.5K | 24 | 3/4X3 | |
| 1029 | - | 100 | 36 | 12B16.5 | - | - | - | - | - | - | 26.5K | 26.5K | 13 | 3/4X3 | |
| 1030 | - | 100 | 36 | 16B26 | - | - | - | - | - | - | 26.5K | 26.5K | 24 | 3/4X3 | |
| 1031 | 16X5 BU | 300 | 36 | - | 5 | 3/4 | 14-1/2 | 1/4 | - | - | 283M | 26.5K | - | - | |
| 1032 | - | 100 | 50 | 14B22 | - | - | - | - | - | - | 208B | 335D | 28 | 3/4X3 | |
| 1033 | - | 100 | 50 | 14B22 | - | - | - | - | - | - | 216A | 335D | 28 | 3/4X3 | |

REMARKS

1. DETAIL 5I2 INTERMEDIATE SUPPORT OF BEAM

LICENSED PROFESSIONAL ENGINEER — LESLIE E. ROBERTSON — No. 34360 — DEPARTMENT OF THE STATE OF NEW YORK

SKILLING-HELLE-CHRISTIANSEN-ROBERTSON — Civil & Structural Engineers

PROJECT: THE WORLD TRADE CENTER | TITLE: BEAM SCHEDULE TOWERS A AND B | DATE: 9/25/68

REVISIONS

| BEAM NO. | SIZE | TYPE | FY | SHAPE | PLATE 1 WIDTH | PLATE 1 THICK | PLATE 2 WIDTH | PLATE 2 THICK | DIMENSIONS LENGTH | DIMENSIONS DIM. A | SUPPORTS LEFT | SUPPORTS RIGHT | STUDS NO. | STUDS SIZE | REMARKS | |
|---|---|---|---|---|---|---|---|---|---|---|---|---|---|---|---|---|
| 1034 | - | 100 | 36 | 16B26 | - | - | - | - | - | - | 201B | 170C | 24 | 3/4X3 | | |
| 1035 | - | 100 | 36 | 16WF36 | - | - | - | - | - | - | 208D | 26.5K | 8 | 3/4X3 | | |
| 1036 | - | 100 | 36 | 14B22 | - | - | - | - | - | - | 208B | 216A | 8 | 3/4X3 | | |
| 1037 | - | 100 | 36 | 14B22 | - | - | - | - | - | - | 335D | 26.5K | 22 | 3/4X3 | | |
| 1038 | - | 100 | 36 | 16WF36 | - | - | - | - | - | - | 286B | 208D | 33 | 3/4X3 | | |
| 1039 | - | 100 | 36 | 16WF50 | - | - | - | - | - | - | 310F | 208D | 16 | 3/4X3 | | |
| 1040 | - | 100 | 36 | 14B22 | - | - | - | - | - | - | 26.5K | 26.5K | - | - | | X |
| 1041 | - | 404 | 50 | 16WF50 | - | - | - | - | - | - | 26.5K | 274B | 26 | 3/4X3 | | |
| 1042 | - | 100 | 36 | 16WF36 | - | - | - | - | - | - | 26.5K | 26.5K | 33 | 3/4X3 | | |
| 1043 | - | 100 | 36 | 16WF36 | - | - | - | - | - | - | 26.5K | 26.5K | 20 | 3/4X3 | | |
| 1044 | - | 100 | 36 | 16WF36 | - | - | - | - | - | - | 26.5K | 105L | 8 | 3/4X3B | | |
| 1045 | - | 100 | 36 | 16WF40 | - | - | - | - | - | - | 26.5K | 26.5K | 33 | 3/4X3 | | |
| 1046 | - | 100 | 36 | 12B16.5 | - | - | - | - | - | - | 105L | 105L | 13 | 3/4X3 | | |
| 1047 | - | 100 | 36 | 18WF60 | - | - | - | - | - | - | 28.4K | 105N | 8 | 3/4X3B | | |
| 1048 | - | 100 | 36 | 18WF50 | - | - | - | - | - | - | 170E | 286B | 15 | 3/4X3B | | |
| 1049 | - | 100 | 36 | 8B13 | - | - | - | - | - | - | 17.4K | 17.4K | - | - | | |
| 1050 | - | 100 | 36 | 12B16.5 | - | - | - | - | | | 501A | 26.5K | - | - | | |
| 1051 | - | 100 | 36 | 5CM9.0 | - | - | - | - | - | - | 366B | 501A | - | - | | |
| 1052 | - | 100 | 36 | 5CM9.0 | - | - | - | - | - | - | 501A | 363A | - | - | | (3) |
| 1053 | - | 100 | 36 | 8B13 | - | - | - | - | - | - | 105H | 105H | - | - | | |
| 1054 | - | 100 | 36 | 14B22 | - | - | - | - | - | - | 283U | 502A | - | - | | |
| 1055 | - | 100 | 36 | 18WF45 | - | - | - | - | - | - | 35.7K | 286B | 48 | 3/4X3 | | |
| 1056 | - | 404 | 36 | 18WF50 | - | - | - | - | - | - | 26.5K | 282A | 26 | 3/4X3 | | |
| 1057 | 20X7 8U | 300 | 36 | - | 7 | 1 | 18 | 3/8 | - | - | 220Q | 205M | - | - | | 1 |
| 1058 | 20X7 8U | 300 | 36 | - | 7 | 1 | 18 | 3/8 | - | - | 408A | 408A | - | - | | |
| 1059 | 20X7 8U | 300 | 36 | - | 7 | 1 | 18 | 3/8 | - | - | 205N | 335D | - | - | | 1 |
| 1060 | 20X7 8U | 300 | 36 | - | 7 | 1 | 18 | 3/8 | - | - | 310F | 310E | - | - | | 2 |
| 1061 | 20X7 8U | 300 | 36 | - | 7 | 1 | 18 | 3/8 | - | - | 408A | 408A | - | - | | |
| 1062 | 20X7 8U | 300 | 36 | - | 7 | 1 | 18 | 3/8 | - | - | 205M | 220Q | - | - | | 2 |
| 1063 | 20X7 8U | 300 | 36 | - | 7 | 1 | 18 | 3/8 | - | - | 220R | 205M | - | - | | 1 |
| 1064 | 20X7 8U | 300 | 36 | - | 7 | 1 | 18 | 3/8 | - | - | 408A | 408A | - | - | | |
| 1065 | 20X7 8U | 300 | 36 | - | 7 | 1 | 18 | 3/8 | - | - | 205N | 335D | - | - | | 1 |
| 1066 | 20X7 8U | 300 | 36 | - | 7 | 1 | 18 | 3/8 | - | - | 335D | 205N | - | - | | 2 |

REMARKS

1 DETAIL 408A RIGHT END OF BEAM

2 DETAIL 408A LEFT END OF BEAM

3 DETAIL 366B RIGHT END OF BEAM, AT FLOOR 75 ONLY

LICENSED PROFESSIONAL ENGINEER — LESLIE E. ROBERTSON — No. 34360 — UNIVERSITY OF THE STATE OF NEW YORK

5-AB1- 32

**SKILLING HELLE-CHRISTIANSEN-ROBERTSON** — **Civil & Structural Engineers**

PROJECT: THE WORLD TRADE CENTER | TITLE: BEAM SCHEDULE TOWERS A AND B | DATE: 4/17/68

REVISIONS

| BEAM NO. | SIZE | TYPE | FY | SHAPE | PLATE 1 WIDTH | PLATE 1 THICK | PLATE 2 WIDTH | PLATE 2 THICK | DIMENSIONS LENGTH | DIMENSIONS DIM. A | SUPPORTS LEFT | SUPPORTS RIGHT | STUDS NO. | STUDS SIZE | REMARKS |
|---|---|---|---|---|---|---|---|---|---|---|---|---|---|---|---|
| 1067 | 20X7 BU | 300 | 36 | - | 7 | 1 | 18 | 3/8 | - | - | 408A | 408A | - | - | 1 |
| 1068 | 20X7 BU | 300 | 36 | - | 7 | 1 | 18 | 3/8 | - | - | 205M | 220R | - | - | |
| 1069 | " | 100 | 36 | 16B31 | " | " | " | " | " | " | 220D | 254B | - | - | |
| 1070 | " | 100 | 36 | 16B31 | " | " | " | " | " | " | 254B | 254B | - | - | |
| 1071 | " | 100 | 50 | 16B31 | " | " | " | " | " | " | 254B | 335B | - | - | 2 |
| 1072 | " | 402 | 50 | 16B31 | 4 | 1/4 | " | " | " | " | 335B | 254B | - | - | 3 |
| 1073 | " | 100 | 36 | 16B31 | " | " | " | " | " | " | 254B | 254B | - | - | |
| 1074 | " | 100 | 36 | 16B31 | " | " | " | " | " | " | 254B | 220D | - | - | |
| 1075 | " | 100 | 36 | 16B31 | " | " | " | " | " | " | 220D | 254C | - | - | |
| 1076 | " | 100 | 36 | 16B31 | " | " | " | " | " | " | 254C | 254C | - | - | |
| 1077 | " | 100 | 50 | 16B31 | " | " | " | " | " | " | 254C | 335B | - | - | 2 |
| 1078 | " | 100 | 50 | 16B31 | " | " | " | " | " | " | 335B | 254C | - | - | 3 |
| 1079 | " | 100 | 36 | 16B31 | " | " | " | " | " | " | 254C | 254C | - | - | |
| 1080 | " | 100 | 36 | 16B31 | " | " | " | " | " | " | 254C | 220D | - | - | |
| 1081 | " | 100 | 36 | 24WF76 | " | " | " | " | " | " | 237C | 317E | 34 | 3/4X3 | |
| 1082 | " | 100 | 36 | 18WF60 | " | " | " | " | " | " | 419A | 414A | 22 | 3/4X3 | |
| 1083 | " | 100 | 36 | 18WF60 | " | " | " | " | " | " | 414B | 419A | 22 | 3/4X3 | |
| 1084 | " | 100 | 36 | 27WF84 | " | " | " | " | " | " | 237C | 251F | 38 | 3/4X3 | |
| 1085 | " | 100 | 36 | 27WF84 | " | " | " | " | " | " | 430A | 430A | 24 | 3/4X3 | |
| 1086 | " | 100 | 36 | 27WF84 | " | " | " | " | " | " | 251F | 482B | 38 | 3/4X3 | |
| 1087 | " | 100 | 36 | 24WF84 | " | " | " | " | " | " | 482A | 482C | 14 | 3/4X3 | |
| 1088 | " | 100 | 36 | 27WF84 | " | " | " | " | " | " | 482B | 251F | 38 | 3/4X3 | |
| 1089 | " | 100 | 36 | 27WF84 | " | " | " | " | " | " | 430A | 430A | 24 | 3/4X3 | |
| 1090 | " | 100 | 36 | 27WF84 | " | " | " | " | " | " | 251F | 237C | 38 | 3/4X3 | |
| 1091 | " | 100 | 36 | 27WF84 | " | " | " | " | " | " | 237C | 251F | 38 | 3/4X3 | |
| 1092 | " | 100 | 36 | 27WF84 | " | " | " | " | " | " | 430A | 430A | 24 | 3/4X3 | |
| 1093 | " | 100 | 36 | 27WF84 | " | " | " | " | " | " | 251F | 482B | 38 | 3/4X3 | |
| 1094 | " | 100 | 36 | 27WF84 | " | " | " | " | " | " | 482B | 251E | 38 | 3/4X3 | |
| 1095 | " | 100 | 36 | 27WF84 | " | " | " | " | " | " | 430A | 430A | 24 | 3/4X3 | |
| 1096 | " | 100 | 36 | 27WF84 | " | " | " | " | " | " | 251F | 237C | 38 | 3/4X3 | |
| 1097 | " | 100 | 36 | 8B13 | " | " | " | " | " | " | 17.4K | 17.4K | - | - | |
| 1098 | " | 100 | 36 | 8B13 | " | " | " | " | " | " | 17.4K | 17.4K | - | - | |
| 1099 | " | 100 | 36 | 18WF45 | " | " | " | " | " | " | 111M | 111M | 10 | 3/4X3 | |

REMARKS

1 DETAIL 408 LERT END OF BEAM
2 DETAIL 406 RIGHT END OF BEAM
3 DETAIL 406 LEFT END OF BEAM

LICENSED PROFESSIONAL ENGINEER — LESLIE E. ROBERTSON — No. 34360 — UNIVERSITY OF THE STATE OF NEW YORK

SKILLING-HELLE-CHRISTIANSEN-ROBERTSON — Civil & Structural Engineers

PROJECT: THE WORLD TRADE CENTER | TITLE: BEAM SCHEDULE TOWERS A AND B | DATE: 3/29/68

REVISIONS

| BEAM NO. | SIZE | TYPE | FY | SHAPE | PLATE 1 WIDTH | PLATE 1 THICK | PLATE 2 WIDTH | PLATE 2 THICK | DIMENSIONS LENGTH | DIMENSIONS DIM. A | SUPPORTS LEFT | SUPPORTS RIGHT | STUDS NO. | STUDS SIZE | REMARKS |
|---|---|---|---|---|---|---|---|---|---|---|---|---|---|---|---|
| 1100 | 18X4 BX | 200 | 36 | - | 2-1/2 | 3/8 | 18 | 3/4 | - | - | 372A | 282A | - | - | |
| 1101 | - | 100 | 36 | 16WF36 | - | - | - | - | - | - | - | 364C | - | - | (2) |
| 1102 | - | 100 | 36 | 16WF36 | - | - | - | - | - | - | 364C | 502A | - | - | |
| 1103 | - | 100 | 36 | 8B13 | - | - | - | - | - | - | 17.4K | 17.4K | - | - | |
| 1104 | - | 100 | 36 | 16B26 | - | - | - | - | - | - | 17.4K | 172B | - | - | |
| 1105 | - | 100 | 36 | 16WF36 | - | - | - | - | - | - | 26.5K | 178A | - | - | 1 |
| 1106 | - | 100 | 36 | 8B13 | - | - | - | - | - | - | 369B | 172C | - | - | X |
| 1107 | - | 100 | 36 | 16WF50 | - | - | - | - | - | - | 178B | 508 | - | - | 1 |
| 1108 | - | 100 | 36 | 8B13 | - | - | - | - | - | - | 17.4K | 17.4K | - | - | |
| 1109 | - | 100 | 36 | 15CH33.9 | - | - | - | - | - | - | 420A | 421A | - | - | |
| 1110 | - | 100 | 36 | 14B22 | - | - | - | - | - | - | 172B | 26.5K | - | - | |
| 1111 | - | 100 | 36 | 8B13 | - | - | - | - | - | - | 17.4K | 17.4K | 11 | 3/4X3 | |
| 1112 | - | 100 | 36 | 16B26 | - | - | - | - | - | - | 26.5K | 26.5K | 28 | 3/4X3 | |
| 1113 | - | 100 | 36 | 16B26 | - | - | - | - | - | - | 26.5K | 26.5K | 24 | 3/4X3 | |
| 1114 | - | 100 | 36 | 12B19 | - | - | - | - | - | - | 105A | 475B | - | - | |
| 1115 | - | 100 | 36 | 12B19 | - | - | - | - | - | - | 26.5K | 26.5K | 15 | 3/4X3 | |
| 1116 | - | 400 | 50 | 16WF40 | 6 | 1/2 | - | - | 23FT 0 | | 106A | 111J | 68 | 3/4X3D | |
| 1117 | - | 100 | 50 | 14WF53 | - | - | - | - | - | - | 106A | 111I | 39 | 3/4X3D | |
| 1118 | - | 100 | 36 | 15CH33.9 | - | - | - | - | - | - | 315B | 315E | - | - | |
| 1119 | - | 100 | 36 | 15CH33.9 | - | - | - | - | - | - | 422A | 423A | - | - | |
| 1120 | - | 100 | 50 | 15CH50.0 | - | - | - | - | - | - | 315B | 233A | - | - | |
| 1121 | - | 100 | 36 | 8B13 | - | - | - | - | - | - | 17.4K | 17.4K | - | - | |
| 1122 | - | 100 | 36 | 8CH11.5 | - | - | - | - | - | - | 363A | 363A | - | - | |
| 1123 | - | 100 | 36 | 12B16.5 | - | - | - | - | - | - | 26.5K | 26.5K | - | - | |
| 1124 | 16X5-1/28X | 204 | 36 | - | 4 | 3/8 | 16 | 3/4 | - | - | 450 | 480 | - | - | |
| 1125 | 16X5-1/28X | 204 | 36 | - | 4 | 3/8 | 16 | 3/4 | - | - | 206A | 375A | - | - | |
| 1126 | 16X5-1/28X | 201 | 36 | - | 4 | 3/8 | 16 | 3/4 | - | - | 480 | 450 | - | - | |
| 1127 | 16X5-1/28X | 201 | 36 | - | 4 | 3/8 | 16 | 3/4 | - | - | 375A | 206A | - | - | |
| 1128 | - | 100 | 36 | 12B16.5 | - | - | - | - | - | - | 26.5K | 26.5K | - | - | |
| 1129 | - | 100 | 36 | 14B22 | - | - | - | - | - | - | 26.5K | 26.5K | - | - | |
| 1130 | 16X5-1/28X | 201 | 36 | - | 4 | 3/8 | 16 | 3/4 | - | - | 375A | 247G | - | - | |
| 1131 | - | 100 | 36 | 8B13 | - | - | - | - | - | - | 369B | 172C | - | - | |
| 1132 | - | 100 | 36 | 10CH25 | - | - | - | - | - | - | 249A | 249A | - | - | |
| 1133 | - | 100 | 36 | 14B22 | - | - | - | - | - | - | 176A | 508 | - | - | 1 |

REMARKS

1 DETAIL 512 INTERMEDIATE SUPPORT OF BEAM
2 SEE 6-AB1-40.1 FOR LEFT SUPPORT DET.

LICENSED PROFESSIONAL ENG'R LESLIE E. ROBERTSON No. 34360 STATE OF N.Y.

SKILLING, HELLE, CHRISTIANSEN, ROBERTSON — Structural & Civil Engineers

PROJECT: THE WORLD TRADE CENTER | TITLE: BEAM SCHEDULE TOWERS A AND B | DATE: 1/10/69

REVISIONS

| BEAM NO. | SIZE | TYPE | FY | PLATE 1 SHAPE | PLATE 1 WIDTH | PLATE 1 THICK | PLATE 2 WIDTH | PLATE 2 THICK | DIMENSIONS LENGTH | DIMENSIONS DIM. A | SUPPORTS LEFT | SUPPORTS RIGHT | STUDS NO. | STUDS SIZE | REMARKS |
|---|---|---|---|---|---|---|---|---|---|---|---|---|---|---|---|
| 1134 | - | 100 | 36 | 14B22 | - | - | - | - | - | - | 26.5K | 26.5K | 10 | 3/4X3B | |
| 1135 | - | 100 | 36 | 14B26 | - | - | - | - | - | - | 2018 | 170C | 18 | 3/4X3 | |
| 1136 | - | 100 | 36 | 12B16.5 | - | - | - | - | - | - | 26.5K | 26.5K | 15 | 3/4X3 | |
| 1137 | - | 404 | 36 | 16WF45 | - | - | - | - | - | - | 278A | 282A | 26 | 3/4X3 | |
| 1138 | - | 100 | 36 | 18I54.7 | - | - | - | - | - | - | 26.5K | 26.5K | - | - | |
| 1139 | - | 100 | 36 | 14B22 | - | - | - | - | - | - | 235A | 26.5K | - | - | |
| 1140 | - | 100 | 36 | 16B26 | - | - | - | - | - | - | 26.5K | 26.5K | 24 | 3/4X3 | |
| 1141 | - | 404 | 36 | 16WF45 | - | - | - | - | - | - | 274A | 282A | 26 | 3/4X3 | |
| 1142 | - | 100 | 36 | 16B26 | - | - | - | - | - | - | 105K | 216A | - | - | |
| 1143 | - | 100 | 36 | 8B13 | - | - | - | - | - | - | 17.4K | 17.4K | - | - | |
| 1144 | - | 100 | 36 | 8B13 | - | - | - | - | - | - | 17.4K | 17.4K | 13 | 3/4X3 | |
| 1145 | - | 100 | 36 | 16WF36 | - | - | - | - | - | - | 26.5K | 172A | - | - | |
| 1146 | - | 100 | 36 | 16B26 | - | - | - | - | - | - | 26.5K | 26.5K | 21 | 3/4X3 | |
| 1147 | - | 100 | 36 | 12WF27 | - | - | - | - | - | - | 105L | 105L | 18 | 3/4X3 | |
| 1148 | - | 100 | 36 | 12CH20.7 | - | - | - | - | - | - | 26.5K | 26.5K | - | - | |
| 1149 | - | 100 | 36 | 12WF36 | - | - | - | - | - | - | 214A | 215A | - | - | |
| 1150 | - | 100 | 36 | 16WF40 | - | - | - | - | - | - | 201E | 170B | - | - | |
| 1151 | - | 100 | 36 | 16WF36 | - | - | - | - | - | - | 216A | 172A | - | - | |
| 1152 | - | 100 | 36 | 16WF36 | - | - | - | - | - | - | 292C | 26.5K | - | - | |
| 1153 | 18X6 BU | 300 | 36 | - | 6 | 1 | 17 | 1/2 | - | - | 26.5K | 172A | - | - | |
| 1154 | - | 100 | 36 | 18WF45 | - | - | - | - | - | - | 172A | 207A | - | - | |
| 1155 | - | 100 | 36 | 12WF31 | - | - | - | - | - | - | 173A | 26.5K | 33 | 3/4X3C | |
| 1156 | - | 100 | 36 | 16B26 | - | - | - | - | - | - | 172B | 26.5K | 24 | 3/4X3 | |
| 1157 | - | 100 | 36 | 12WF40 | - | - | - | - | - | - | 370K | 369B | - | - | |
| 1158 | - | 100 | 36 | 12WF27 | - | - | - | - | - | - | 111M | 111M | - | - | |
| 1159 | - | 100 | 36 | 21WF55 | - | - | - | - | - | - | 111R | 106R | - | - | |
| 1160 | - | 100 | 36 | 16WF40 | - | - | - | - | - | - | 106N | 111V | - | - | |
| 1161 | - | 100 | 36 | 10CH25 | - | - | - | - | - | - | 249B | 249B | - | - | |
| 1162 | - | 100 | 36 | 16WF40 | - | - | - | - | - | - | 106D | 106D | - | - | |
| 1163 | 18X4 CH | 501 | 50 | 18CH42.7 | 2-7/8 | 7/8 | - | - | 24FT 0 | 1FT 0 | 246A | 249B | - | - | |
| 1164 | - | 100 | 36 | 16WF36 | - | - | - | - | - | - | 26.5K | 111A | 33 | 3/4X3 | |
| 1165 | - | 100 | 36 | 16WF36 | - | - | - | - | - | - | 283U | 506B | 23 | 3/4X3 | |
| 1166 | - | 100 | 36 | 16WF36 | - | - | - | - | - | - | 283U | 506A | 23 | 3/4X3 | |

LICENSED PROFESSIONAL ENGINEER — LESLIE E. ROBERTSON — No. 34960 — REGISTERED IN THE STATE OF NEW YORK

SKILLING, HELLE, CHRISTIANSEN, ROBERTSON — Structural & Civil Engineers

PROJECT: THE WORLD TRADE CENTER

TITLE: BEAM SCHEDULE TOWERS A AND B

DATE: 1/10/69

REVISIONS

| BEAM NO. | SIZE | TYPE | FY | SHAPE | PLATE 1 WIDTH | PLATE 1 THICK | PLATE 2 WIDTH | PLATE 2 THICK | DIMENSIONS LENGTH | DIMENSIONS DIM. A | SUPPORTS LEFT | SUPPORTS RIGHT | STUDS NO. | STUDS SIZE | REMARKS |
|---|---|---|---|---|---|---|---|---|---|---|---|---|---|---|---|
| 1167 | - | 100 | 36 | 10WF21 | - | - | - | - | - | - | 17.4K | 17.4K | - | - | |
| 1168 | - | 100 | 36 | 16WF36 | - | - | - | - | - | - | 506A | 283U | 23 | 3/4X3 | |
| 1169 | - | 100 | 36 | 12WF45 | - | - | - | - | - | - | 26.5K | 26.5K | 25 | 3/4X3 | |
| 1170 | - | 100 | 36 | 16WF36 | - | - | - | - | - | - | 506B | 283U | 23 | 3/4X3 | |
| 1171 | - | 100 | 36 | 12WF31 | - | - | - | - | - | - | 506A | 506B | - | - | |
| 1172 | - | 100 | 36 | 10WF25 | - | - | - | - | - | - | 505A | 505B | - | - | X |
| 1173 | - | 100 | 36 | 12WF27 | - | - | - | - | - | - | 102A | 103A | - | - | |
| 1174 | - | 100 | 36 | 30WF108 | - | - | - | - | - | - | 105E | 94.2K | - | - | |
| 1175 | - | 100 | 36 | 16WF58 | - | - | - | - | - | - | 26.9K | 29.8K | - | - | |
| 1176 | - | 100 | 36 | 8B13 | - | - | - | - | - | - | 17.4K | 172C | - | - | |
| 1177 | 24X6 BU | 300 | 36 | - | 6 | 3/4 | 22-1/2 | 3/8 | - | - | 283P | 94.2K | - | - | |
| 1178 | - | 100 | 36 | 16WF58 | - | - | - | - | - | - | 27.8K | 29.5K | - | - | |
| 1179 | 24X6 BU | 300 | 36 | - | 6 | 1-3/4 | 20-1/2 | 1/2 | - | - | 88.4K | 220W | - | - | |
| 1180 | 24X6 BU | 300 | 36 | - | 6 | 3/4 | 22-1/2 | 3/8 | - | - | 283V | 172A | - | - | |
| 1181 | - | 100 | 36 | 24WF94 | - | - | - | - | - | - | 51.2K | 288A | - | - | |
| 1182 | - | 100 | 36 | 16WF40 | - | - | - | - | - | - | 288A | 292C | 33 | 3/4X3 | |
| 1183 | - | 100 | 36 | 18WF45 | - | - | - | - | - | - | 26.5K | 288A | - | - | |
| 1184 | - | 100 | 36 | 18WF50 | - | - | - | - | - | - | 72.3K | 111T | - | - | |
| 1185 | - | 100 | 36 | 24WF68 | - | - | - | - | - | - | 357F | 72.2K | - | - | |
| 1186 | - | 100 | 36 | 24WF68 | - | - | - | - | - | - | (456M) | 72.2K | - | - | (2) |
| 1187 | - | 100 | 36 | 16WF36 | - | - | - | - | - | - | 26.5K | 26.5K | - | - | |
| 1188 | - | 100 | 36 | 24WF120 | - | - | - | - | - | - | 111T | 360B | - | - | |
| 1189 | - | 100 | 36 | 24WF76 | - | - | - | - | - | - | 105E | 94.2K | - | - | |
| 1190 | - | 100 | 36 | 16WF40 | - | - | - | - | - | - | 220V | 419B | - | - | |
| 1191 | 20X7 BU | 300 | 36 | - | 7 | 7/8 | 18-1/4 | 3/8 | - | - | 205X | 409D | - | - | |
| 1192 | 20X7 BU | 300 | 36 | - | 7 | 3/4 | 18-1/2 | 3/8 | - | - | 205W | 220W | - | - | |
| 1193 | 20X7 BU | 300 | 36 | - | 7 | 3/4 | 18-1/2 | 3/8 | - | - | 220W | 322B | - | - | |
| 1194 | - | 100 | 36 | 16WF40 | - | - | - | - | - | - | 322B | 401A | - | - | |
| 195 | - | 100 | 36A | 16WF40 | - | - | - | - | - | - | 205V | 220V | - | - | |
| 196 | - | 100 | 36 | 16WF50 | - | - | - | - | - | - | 338D | 285A | - | - | |
| 197 | - | 100 | 36 | 16WF50 | - | - | - | - | - | - | 285A | 285A | - | - | |
| 198 | - | 100 | 36 | 16B31 | - | - | - | - | - | - | 285A | 205R | - | - | |
| 199 | 21X7 BU | 200 | 36 | - | 7 | 1 | 19 | 1/2 | - | - | 205S | 265D | - | - | 1 |

REMARKS

1 EXTEND LEFT END 1FT-0 PAST COLUMN CENTER LINE

2 LEFT SUPPORT DETAIL IS REVISED AFTER FABRICATION

**SKILLING-HELLE-CHRISTIANSEN-ROBERTSON** — Civil & Structural Engineers

| PROJECT | TITLE | DATE |
|---|---|---|
| THE WORLD TRADE CENTER | BEAM SCHEDULE TOWERS A AND B | 1/24/68 |

REVISIONS

| BEAM NO. | SIZE | TYPE | FY | SHAPE | PLATE 1 WIDTH | PLATE 1 THICK | PLATE 2 WIDTH | PLATE 2 THICK | DIMENSIONS LENGTH | DIMENSIONS DIM. A | SUPPORTS LEFT | SUPPORTS RIGHT | STUDS NO. | STUDS SIZE | REMARKS |
|---|---|---|---|---|---|---|---|---|---|---|---|---|---|---|---|
| 1200 | - | 100 | 36 | 16WF50 | - | - | - | - | - | - | 265D | 285A | - | - | |
| 1201 | - | 100 | 36 | 16WF50 | - | - | - | - | - | - | 285A | 338D | - | - | |
| 1202 | - | 100 | 36 | 16WF40 | - | - | - | - | - | - | 220V | 419B | - | - | 2 |
| 1203 | 30X7 BU | 300 | 36 | - | 7 | 3/4 | 28-1/2 | 3/8 | - | - | 205Y | 205T | 20 | 3/4X3B | 3 |
| 1204 | 30X7 BU | 300 | 36 | - | 7 | 3/4 | 28-1/2 | 3/8 | - | - | 409C | 205U | - | - | |
| 1205 | - | 100 | 36 | 16WF40 | - | - | - | - | - | - | 205I | 205I | - | - | |
| 1206 | - | 100 | 36 | 16WF40 | - | - | - | - | - | - | 401A | 401A | - | - | |
| 1207 | - | 100 | 36 | 16WF40 | - | - | - | - | - | - | 205V | 220V | - | - | |
| 1208 | - | 100 | 36 | 16WF50 | - | - | - | - | - | - | 338D | 285A | - | - | |
| 1209 | - | 100 | 36 | 16WF50 | - | - | - | - | - | - | 285A | 285A | - | - | |
| 1210 | - | 100 | 36 | 16WF50 | - | - | - | - | - | - | 285A | 205R | - | - | 1 |
| 1211 | - | 100 | 36 | 16B31 | - | - | - | - | - | - | 205R | 285A | - | - | |
| 1212 | - | 100 | 36 | 16WF50 | - | - | - | - | - | - | 285A | 285A | - | - | |
| 1213 | - | 100 | 36 | 16WF50 | - | - | - | - | - | - | 285A | 338D | - | - | |
| 1214 | 16X5-1/2BX | 201 | 36 | - | 4 | 3/8 | 16 | 3/4 | - | - | 254B | 206B | - | - | |
| 1215 | - | 100 | 36 | 18WF60 | - | - | - | - | - | - | 111J | 106G | 41 | 3/4X3 | |
| 1216 | - | 40Z | 50 | 21WF55 | 6 | 1/2 | - | - | 23FT | - | 106G | 106G | 79 | 3/4X3 | |
| 1217 | - | 100 | 36 | 24WF76 | - | - | - | - | - | - | 317E | 237C | 34 | 3/4X3 | |
| 1218 | - | 100 | 36 | 24WF76 | - | - | - | - | - | - | 237C | 317E | 34 | 3/4X3 | |
| 1219 | - | 100 | 36 | 18WF60 | - | - | - | - | - | - | 419A | 414B | 28 | 3/4X3 | |
| 1220 | - | 100 | 36 | 18WF60 | - | - | - | - | - | - | 414B | 419A | 30 | 3/4X3 | |
| 1221 | - | 100 | 36 | 24WF76 | - | - | - | - | - | - | 317E | 237C | 34 | 3/4X3 | |
| 1222 | - | 100 | 36 | 24WF84 | - | - | - | - | - | - | 473A | 482A | 14 | 3/4X3 | |
| 1223 | - | 100 | 50 | 21WF55 | - | - | - | - | - | - | 106G | 106G | 51 | 3/4X3D | |
| 1224 | - | 100 | 36 | 16B26 | - | - | - | - | - | - | 26.5K | 352 | 11 | 3/4X3 | |
| 1225 | - | 100 | 36 | 8B13 | - | - | - | - | - | - | 105D | 105D | 11 | 3/4X3 | |
| 1226 | 16X5-1/2BX | 200 | 36 | - | 4 | 3/8 | 16 | 3/4 | - | - | 206A | 285A | - | - | |
| 1227 | 16X5-1/2BX | 200 | 36 | - | 4 | 3/8 | 16 | 3/4 | - | - | 285A | 206A | - | - | |
| 1228 | 15X3-3/8CH | 505 | 36 | 15CH50 | 2-5/8 | 9/16 | - | - | - | - | 315 | 232 | - | - | |
| 1229 | - | 100 | 36 | 16WF40 | - | - | - | - | - | - | 220M | 205F | - | - | |
| 1230 | - | 100 | 36 | 16WF40 | - | - | - | - | - | - | 401A | 401A | - | - | |
| 1231 | - | 100 | 36 | 16WF40 | - | - | - | - | - | - | 205F | 335C | - | - | 1 |
| 1232 | - | 100 | 36 | 12B16.5 | - | - | - | - | - | - | 105L | 105L | 14 | 3/4X3 | |

REMARKS

1 DETAIL 405 RIGHT END OF BEAM
2 DETAIL 220V, DO NOT INCLUDE LOWER DIAG. BRACING
3 DETAIL 205Y, DO NOT INCLUDE LOWER DIAG. BRACING

LESLIE E. ROBERTSON — REGISTERED PROFESSIONAL ENGINEER — No. 34960 — UNIVERSITY OF THE STATE OF NEW YORK

5-AB1-37

**SKILLING, HELLE, CHRISTIANSEN, ROBERTSON** — Structural & Civil Engineers

PROJECT: THE WORLD TRADE CENTER | TITLE: BEAM SCHEDULE TOWERS A AND B | DATE: 12/ 6/68

REVISIONS

| BEAM NO. | SIZE | TYPE | FY | SHAPE | PLATE 1 WIDTH | PLATE 1 THICK | PLATE 2 WIDTH | PLATE 2 THICK | DIMENSIONS LENGTH | DIMENSIONS DIM. A | SUPPORTS LEFT | SUPPORTS RIGHT | STUDS NO. | STUDS SIZE | REMARKS |
|---|---|---|---|---|---|---|---|---|---|---|---|---|---|---|---|
| 1234 | - | 10C | 36 | 16WF36 | - | - | - | - | - | - | 287G | 208H | 29 | 3/4X3 | |
| 1235 | - | 10C | 36 | 16WF36 | - | - | - | - | - | - | 26.5K | 208H | 15 | 3/4X3 | |
| 1236 | - | 10C | 36 | 14WF43 | - | - | - | - | - | - | 368C | 368B | 6 | 3/4X3 | |
| 1237 | 18X4 CH | 50I | 36 | 18CH42.7 | 2-7/8 | 7/8 | - | - | 24FT 0 | 1FT 0 | 246B | 249A | - | - | |
| 1238 | - | 10C | 36 | 16WF36 | - | - | - | - | - | - | 26.5K | 208H | 15 | 3/4X3 | |
| 1239 | - | 100 | 36 | 12B19 | - | - | - | - | - | - | 335B | 235C | 29 | 3/4X3 | |
| 1240 | - | 100 | 50 | 16WF40 | - | - | - | - | - | - | 220I | 205F | - | - | X |
| 1241 | - | 100 | 50 | 16WF40 | - | - | - | - | - | - | 402A | 402A | - | - | |
| 1242 | - | 100 | 50 | 16WF40 | - | - | - | - | - | - | 205F | 335C | | | 2 |
| 1243 | - | 100 | 50 | 16WF40 | - | - | - | - | - | - | 307C | 310B | - | - | |
| 1244 | 16X4 BU | 20C | 36 | - | 2- 1/2 | 3/8 | 16 | 3/4 | - | - | 258A | 257A | - | - | |
| 1245 | 16X4 BX | 20C | 36 | - | 2- 1/2 | 3/8 | 16 | 3/4 | - | - | 477A | 477A | - | - | |
| 1246 | 16X4 BX | 20C | 36 | - | 2- 1/2 | 3/8 | 16 | 3/4 | - | - | 257B | 259A | - | - | |
| 1247 | 16X4 BX | 20C | 36 | - | 2- 1/2 | 3/8 | 16 | 3/4 | - | - | 259A | 257B | - | - | |
| 1248 | - | 10C | 36 | 12WF27 | - | - | - | - | - | - | 26.5K | 26.5K | 18 | 3/4X3 | |
| 1249 | - | 10C | 36 | 8B13 | - | - | - | - | - | - | 17.4K | 17.4K | - | - | |
| 1250 | - | 100 | 36 | 14B22 | - | - | - | - | - | - | 26.5K | 475B | 24 | 3/4X3 | |
| 1251 | - | 100 | 36 | 8B13 | - | - | - | - | - | - | 17.4K | 17.4K | 11 | 3/4X3 | |
| 1252 | - | 404 | 50 | 16WF50 | - | - | - | - | - | - | 338D | 274B | 26 | 3/4X3 | |
| 1253 | - | 100 | 36 | 16WF50 | - | - | - | - | - | - | 220I | 208H | 39 | 3/4X3D | |
| 1254 | - | 100 | 36 | 24WF110 | - | - | - | - | - | - | 173 | 35.3K | - | - | |
| 1255 | - | 100 | 50 | 12B19 | - | - | - | - | - | - | 259A | 335G | 15 | 3/4X3 | |
| 1256 | - | 100 | 36 | 8B13 | - | - | - | - | - | - | 214A | 215A | 14 | 3/4X3 | |
| 1257 | - | 100 | 36 | 9CH13.4 | - | - | - | - | - | - | 17.4K | 17.4K | - | - | |
| 1258 | - | 100 | 36 | 16WF36 | - | - | - | - | - | - | 208H | 208H | 8 | 3/4X3 | |
| 1259 | - | 100 | 36 | 8B13 | - | - | - | - | - | - | 17.4K | 17.4K | 15 | 3/4X3 | |
| 1260 | - | 10C | 36 | 16B31 | - | - | - | - | - | - | 216A | 259A | 28 | 3/4X3 | |
| 1261 | - | 100 | 36 | 16B31 | - | - | - | - | - | - | 208B | 259A | 28 | 3/4X3 | |
| 1262 | - | 10C | 36 | 14B22 | - | - | - | - | - | - | 201B | 475B | - | - | |
| 1263 | - | 10C | 36 | 16B26 | - | - | - | - | - | - | 201F | 201B | 8 | 3/4X3B | |
| 1264 | 16X4 BX | 200 | 36 | - | 2- 1/2 | 3/8 | 16 | 3/4 | - | - | 296C | 274B | - | - | |
| 1265 | - | 10C | 36 | 16B26 | - | - | - | - | - | - | 208B | 216A | 8 | 3/4X3 | |
| 1266 | - | 10C | 36 | 12WF45 | - | - | - | - | - | - | 241A | 26.5K | 12 | 3/4X4-1/2C | |

REMARKS

1 DETAIL 477A RIGHT END OF BEAM
2 DETAIL 405 RIGHT END OF BEAM

LICENSED PROFESSIONAL ENGINEER — LESLIE E. ROBERTSON — No. 34360 — UNIVERSITY OF THE STATE OF NEW YORK

**SKILLING, HELLE, CHRISTIANSEN, ROBERTSON** — Structural & Civil Engineers

PROJECT: THE WORLD TRADE CENTER | TITLE: BEAM SCHEDULE TOWERS A AND B | DATE: 12/ 6/68

REVISIONS

| BEAM NO. | SIZE | TYPE | FY | SHAPE | PLATE 1 WIDTH | PLATE 1 THICK | PLATE 2 WIDTH | PLATE 2 THICK | DIMENSIONS LENGTH | DIMENSIONS DIM. A | SUPPORTS LEFT | SUPPORTS RIGHT | STUDS NO. | STUDS SIZE | REMARKS |
|---|---|---|---|---|---|---|---|---|---|---|---|---|---|---|---|
| 1267 | - | 100 | 36 | 14B22 | - | - | - | - | - | - | 263M | 475B | - | - | |
| * 1268 | - | 100 | 36 | 8B13 | - | - | - | - | - | - | 17.4K | 17.4K | 9 | 3/4X3 | |
| 1269 | - | 100 | 36 | 12B16.5 | - | - | - | - | - | - | 26.5K | 26.5K | 15 | 3/4X3 | |
| 1270 | - | 100 | 36 | 12WF27 | - | - | - | - | - | - | 26.5K | 26.5K | 10 | 3/4X3 | |
| 1271 | - | 100 | 50 | 14WF34 | - | - | - | - | - | - | 106D | 106D | 47 | 3/4X3 | |
| 1272 | - | 100 | 36 | 12B16.5 | - | - | - | - | - | - | 26.5K | 26.5K | 15 | 3/4X3 | X |
| 1273 | - | 100 | 36 | 12B16.5 | - | - | - | - | - | - | 105L | 26.5K | 15 | 3/4X4-1/2C | |
| 1274 | - | 100 | 36 | 14WF48 | - | - | - | - | - | - | 26.5K | 105K | 10 | 3/4X4-1/2B | |
| 1275 | - | 100 | 36 | 8B13 | - | - | - | - | - | | 17.4K | 17.4K | - | - | |
| 1276 | - | 100 | 36 | 12B16.5 | - | - | - | - | - | - | 310B | 26.5K | 15 | 3/4X3B | |
| 1277 | - | 100 | 36 | 12B16.5 | - | - | - | - | - | - | 26.5K | 26.5K | 15 | 3/4X3 | |
| 1278 | - | 100 | 36 | 10B15 | - | - | - | - | - | - | 17.4K | 17.4K | - | - | |
| 1279 | - | 100 | 36 | 12WF45 | - | - | - | - | - | - | 26.5K | 368B | 10 | 3/4X3 | |
| 1280 | - | 100 | 36 | 12WF45 | - | - | - | - | - | - | 170A | 211A | 15 | 3/4X3 | |
| 1281 | - | 100 | 36 | 14B22 | - | - | - | - | - | - | 335C | 26.5K | 19 | 3/4X3 | |
| 1282 | - | 100 | 36 | 14WF43 | - | - | - | - | - | - | 211A | 368C | 39 | 3/4X3 | |
| 1283 | - | 100 | 36 | 12WF45 | - | - | - | - | - | - | 307C | 368C | 15 | 3/4X3B | |
| 1284 | - | 100 | 36 | 12WF45 | - | - | - | - | - | - | 26.5K | 368B | 10 | 3/4X3B | |
| 1285 | - | 100 | 36 | 12WF45 | - | - | - | - | - | - | 26.5K | 368B | 10 | 3/4X3B | |
| 1286 | - | 100 | 36 | 14WF43 | - | - | - | - | - | - | 368 | 368 | - | - | |
| 1287 | - | 100 | 36 | 16WF40 | - | - | - | - | - | - | 220I | 205F | 35 | 3/4X3 | |
| 1288 | - | 100 | 36 | 16WF40 | - | - | - | - | - | - | 402A | 402A | 29 | 3/4X3 | |
| 1289 | - | 100 | 36 | 16WF40 | - | - | - | - | - | - | 205F | 335C | 39 | 3/4X3 | 1 |
| 1290 | - | 100 | 36 | 16WF40 | - | - | - | - | - | - | 307C | 310B | 39 | 3/4X3 | 2 |
| 1291 | - | 100 | 36 | 16WF40 | - | - | - | - | - | - | 402A | 402A | 28 | 3/4X3 | |
| 1292 | - | 100 | 36 | 16WF40 | - | - | - | - | - | - | 205F | 220I | 36 | 3/4X3 | |
| 1293 | 18X4 CH | 502 | 50 | 18CH45.8 | - | - | - | - | - | - | 246B | 324A | - | - | |
| 1294 | - | 100 | 36 | 16B26 | - | - | - | - | - | | 335H | 235D | 15 | 3/4X3 | |
| 1295 | - | 100 | 36 | 14B22 | - | - | - | - | - | - | 26.5K | 26.5K | - | - | |
| * 1296 | - | 100 | 36 | 6B16 | - | - | - | - | - | - | 8.8K | 8.8K | 9 | 3/4X3 | |
| 1297 | - | 100 | 36 | 16WF36 | - | - | - | - | - | - | 208H | 208H | 8 | 3/4X3 | |
| 1298 | - | 100 | 36 | 12B16.5 | - | - | - | - | - | - | 26.5K | 26.5K | - | - | |
| 1299 | - | 100 | 36 | 12B16.5 | - | - | - | - | - | - | 26.5K | 26.5K | - | - | |

REMARKS

1 DETAIL 405 RIGHT END OF BEAM
2 DETAIL 405 LEFT END OF BEAM

* FCLC

LICENSED PROFESSIONAL ENGINEER & UNIVERSITY OF THE STATE OF NEW YORK — LESLIE E. ROBERTSON — No. 34360

**SKILLING-HELLE-CHRISTIANSEN-ROBERTSON** — **Civil & Structural Engineers**

| PROJECT | TITLE | DATE |
|---|---|---|
| WORLD TRADE CENTER | BEAM SCHEDULE TOWERS A AND B | 1/24/66 |

REVISIONS

| BEAM NO. | SIZE | TYPE | FY | SHAPE | PLATE 1 WIDTH | PLATE 1 THICK | PLATE 2 WIDTH | PLATE 2 THICK | DIMENSIONS LENGTH | DIMENSIONS DIM. A | SEAT PLATES LEFT | SEAT PLATES RIGHT | STIFFENERS NO. | STIFFENERS SIZE | STIFFENERS CLIP DIMS |
|---|---|---|---|---|---|---|---|---|---|---|---|---|---|---|---|
| 1300 | - | 100 | 36 | 12B16.5 | - | - | - | - | - | - | 26.5K | 26.5K | - | - | |
| 1301 | - | 100 | 36 | 16WF40 | - | - | - | - | - | - | 220I | 206H | 39 | 3/4X3 | |
| 1302 | - | 100 | 36 | 16WF40 | - | - | - | - | - | - | 208H | 220I | 39 | 3/4X3 | |
| 1303 | - | 100 | 36 | 12B16.5 | - | - | - | - | - | - | 26.5K | 26.5K | - | - | |
| 1304 | - | 100 | 36 | 12WF27 | - | - | - | - | - | - | 26.5K | 26.5K | - | - | |
| 1305 | - | 100 | 36 | 12B16.5 | - | - | - | - | - | - | 26.5K | 26.5K | - | - | |
| 1306 | - | 100 | 36 | 12B16.5 | - | - | - | - | - | - | 105L | 26.5K | 15 | 3/4X4-1/2C | X |
| 1307 | - | 100 | 36 | 16B26 | - | - | - | - | - | - | 26.5K | 294D | - | - | |
| 1308 | 16X5-1/2BX | 201 | 36 | - | 4 | 3/8 | 16 | 3/4 | - | - | 294D | 247G | - | - | |
| 1309 | - | 100 | 36 | 16WF36 | - | - | - | - | - | - | 26.5K | 276A | 30 | 3/4X3 | |
| 1310 | - | 100 | 36 | 14B22 | - | - | - | - | - | - | 26.5K | 26.5K | 10 | 3/4X3 | |
| 1311 | - | 100 | 36 | 12B16.5 | - | - | - | - | - | - | 26.5K | 26.5K | - | - | |
| 1312 | - | 100 | 36 | 15CH33.9 | - | - | - | - | - | - | 315 | 315 | - | - | |
| 1313 | - | 100 | 36 | 10B17 | - | - | - | - | - | - | 17.4K | 17.4K | - | 3/4X3 | |
| 1314 | 16X3-3/8CH | 505 | 36 | 15CH33.9 | 2-3/8 | 1- 1/16 | - | - | - | - | 315 | 282 | - | - | |
| 1315 | - | 100 | 36 | 12B16.5 | - | - | - | - | - | - | 26.5K | 26.5K | - | - | |
| 1316 | - | 100 | 36 | 12B16.5 | - | - | - | - | - | - | 26.5K | 26.5K | - | - | |
| 1317 | - | 100 | 50 | 14WF34 | - | - | - | - | - | - | 106D | 106D | 54 | 3/4X3 | |
| 1318 | - | 100 | 36 | 16WF40 | - | - | - | - | - | - | 335C | 205F | - | - | |
| 1319 | - | 100 | 36 | 16WF40 | - | - | - | - | - | - | 276A | 206H | 39 | 3/4X3J | |
| 1320 | - | 100 | 50 | 14WF34 | - | - | - | - | - | - | 106D | 106D | 34 | 3/4X3 | |
| 1321 | - | 100 | 36 | 12B19 | - | - | - | - | - | - | 283K | 111K | 15 | 3/4X3 | |
| 1322 | - | 100 | 36 | 12B22 | - | - | - | - | - | - | 105L | 26.5K | 15 | 3/4X4-1/2C | |
| 1323 | - | 100 | 36 | 12WF27 | - | - | - | - | - | - | 26.5K | 26.5K | - | - | |
| 1324 | - | 100 | 36 | 12WF27 | - | - | - | - | - | - | 283G | 105L | 19 | 3/4X4-1/2 | |
| 1325 | - | 100 | 36 | 12B16.5 | - | - | - | - | - | - | 26.5K | 26.5K | 13 | 3/4X3 | |
| 1326 | - | 100 | 36 | 12B16.5 | - | - | - | - | - | - | 303B | 17.7K | 10 | 3/4X3B | |
| 1327 | - | 100 | 36 | 12B16.5 | - | - | - | - | - | - | 26.5K | 26.5K | 12 | 3/4X3 | |
| 1328 | - | 100 | 36 | 16WF40 | - | - | - | - | - | - | 368B | 220I | 49 | 3/4X3J | |
| 1329 | - | 100 | 36 | 16WF40 | - | - | - | - | - | - | 205F | 220F | - | - | |
| 1330 | - | 100 | 36 | 12B16.5 | - | - | - | - | - | - | 26.5K | 26.5K | - | - | |
| 1331 | - | 100 | 36 | 12WF27 | - | - | - | - | - | - | 26.5K | 26.5K | - | - | |
| 1332 | - | 100 | 36 | 16WF36 | - | - | - | - | - | - | 208H | 276A | 8 | 3/4X3 | |
| 1333 | - | 100 | 36 | 16WF36 | - | - | - | - | - | - | 26.5K | 276A | 30 | 3/4X3 | |

LICENSED PROFESSIONAL ENGINEER
LESLIE E. ROBERTSON
No. 34360
UNIVERSITY OF THE STATE OF NEW YORK

**SKILLING-HELLE-CHRISTIANSEN-ROBERTSON** — **Civil & Structural Engineers**

PROJECT: THE WORLD TRADE CENTER | TITLE: BEAM SCHEDULE TOWERS A AND B | DATE: 1/22/68

REVISIONS

| BEAM NO. | SIZE | TYPE | FY | SHAPE | PLATE 1 WIDTH | PLATE 1 THICK | PLATE 2 WIDTH | PLATE 2 THICK | DIMENSIONS LENGTH | DIMENSIONS DIM. A | SUPPORTS LEFT | SUPPORTS RIGHT | STUDS NO. | STUDS SIZE | REMARKS |
|---|---|---|---|---|---|---|---|---|---|---|---|---|---|---|---|
| 1334 | - | 100 | 36 | 16WF40 | - | - | - | - | - | - | 276A | 368B | 41 | 3/4X3 | |
| 1335 | - | 100 | 36 | 16WF40 | - | - | - | - | - | - | 111A | 106D | 15 | 3/4X3 | |
| 1336 | - | 100 | 36 | 14B22 | - | - | - | - | - | - | 26.5K | 26.5K | 10 | 3/4X3B | |
| 1337 | - | 449 | 36 | 16B31 | - | - | - | - | - | - | 307D | 26.5K | 28 | 3/4X3D | |
| 1338 | - | 100 | 36 | 12B16.5 | - | - | - | - | - | - | 26.5K | 26.5K | - | - | |
| 1339 | - | 449 | 36 | 16WF40 | - | - | - | - | - | - | 111A | 106D | 15 | 3/4X3 | X |
| 1340 | - | 100 | 36 | 16WF36 | - | - | - | - | - | - | 306C | 208H | 15 | 3/4X3 | |
| 1341 | - | 100 | 36 | 16WF40 | - | - | - | - | - | - | 276A | 208H | 39 | 3/4X3D | |
| 1342 | - | 100 | 36 | 16WF36 | - | - | - | - | - | - | 26.5K | 208H | 10 | 3/4X4-1/2B | |
| 1343 | - | 100 | 36 | 16WF45 | - | - | - | - | - | - | 106D | 106D | 39 | 3/4X3 | |
| 1344 | - | 100 | 36 | 12WF27 | - | - | - | - | - | - | 283G | 111H | 19 | 3/4X4-1/2 | |
| 1345 | - | 100 | 36 | 12B16.5 | - | - | - | - | - | - | 105L | 26.5K | 15 | 3/4X4-1/2C | |
| 1346 | - | 100 | 36 | 16B31 | - | - | - | - | - | - | 26.5K | 26.5K | 29 | 3/4X3 | |
| 1347 | 16X7 WF | 400 | 36 | 16WF36 | 6 | 3/4 | - | - | 23FT 6 | 1FT 6 | 208H | 220I | 47 | 3/4X3 | |
| 1348 | - | 404 | 36 | 16WF64 | - | - | - | - | - | - | 208H | 338D | 26 | 3/4X3 | |
| 1349 | 16X4 BU | 300 | 36 | - | 4 | 3/4 | 14-1/2 | 1/4 | - | - | 105M | 208H | - | - | |
| 1350 | - | 100 | 36 | 16WF36 | - | - | - | - | - | - | 26.5K | 208H | 10 | 3/4X3B | |
| 1351 | 30X9 BX | 251 | 36 | - | 9 | 1 | 28 | 3/8 | - | - | 347A | 347A | - | - | |
| 1352 | 25X6 BU | 300 | 36 | - | 6 | 1 | 23 | 1/2 | - | - | 105E | 278A | - | - | |
| 1353 | - | 100 | 36 | 18WF45 | - | - | - | - | - | - | 26.5K | 26.5K | - | - | |
| 1354 | 25X7 BU | 300 | 36 | - | 7 | 1- 1/2 | 22 | 3/4 | - | - | 174B | 479A | - | - | |
| 1355 | - | 100 | 36 | 16WF40 | - | - | - | - | - | - | 401A | 404A | - | - | |
| 1356 | 25X6 BU | 300 | 36 | - | 6 | 1- 1/2 | 22 | 5/8 | - | - | 105E | 35.3K | - | - | |
| 1357 | - | 100 | 36 | 18WF45 | - | - | - | - | - | - | 456D | 26.5K | - | - | |
| 1358 | - | 100 | 36 | 12WF45 | - | - | - | - | - | - | 306B | 368D | 12 | 3/4X3 | |
| 1359 | 30X9 BX | 251 | 36 | - | 9 | 1 | 28 | 3/8 | - | - | 347A | 347A | - | - | |
| 1360 | 38X7 BU | 301 | 36 | - | 7 | 1- 3/4 | 34-1/2 | 3/4 | - | - | 352G | 220I | - | - | 2 |
| 1361 | 25X7 BU | 300 | 36 | - | 7 | 1- 1/2 | 22 | 3/4 | - | - | 278A | 338E | - | - | |
| 1362 | 25X7 BU | 300 | 36 | - | 7 | 1- 1/2 | 22 | 3/4 | - | - | 205G | 220J | - | - | 3 |
| 1363 | - | 100 | 36 | 12B16.5 | - | - | - | - | - | - | 26.5K | 26.5K | - | - | |
| 1364 | - | 100 | 36 | 14B22 | - | - | - | - | - | - | 105F | 26.5K | 8 | 3/4X3C | |
| 1365 | - | 100 | 36 | 16WF58 | - | - | - | - | - | - | 26.5K | 352B | 10 | 3/4X4-1/2B | |
| 1366 | - | 100 | 36 | 14B22 | - | - | - | - | - | - | 105D | 105F | 10 | 3/4X3 | |

REMARKS

1 DETAIL 406 LEFT END OF BEAM
2 REINF. PLATES 5FT -2 X 1/2
3 DETAIL 404 LEFT END OF BEAM

LICENSED PROFESSIONAL ENGINEER LESLIE E. ROBERTSON No. 34360 UNIVERSITY OF THE STATE OF NEW YORK

S-A62- 41

**SKILLING-HELLE-CHRISTIANSEN-ROBERTSON** — **Civil & Structural Engineers**

PROJECT: THE WORLD TRADE CENTER | TITLE: BEAM SCHEDULE TOWERS A AND B | DATE: 1/22/68

REVISIONS

| BEAM NO. | SIZE | TYPE | FY | SHAPE | PLATE 1 WIDTH | PLATE 1 THICK | PLATE 2 WIDTH | PLATE 2 THICK | DIMENSIONS LENGTH | DIMENSIONS DIM. A | SUPPORTS LEFT | SUPPORTS RIGHT | STUDS NO. | STUDS SIZE | REMARKS |
|---|---|---|---|---|---|---|---|---|---|---|---|---|---|---|---|
| 1367 | - | 100 | 36 | 16WF45 | - | - | - | - | - | - | 106D | 106D | (39) | 3/4X3 | |
| 1368 | - | 100 | 36 | 12B16.5 | - | - | - | - | - | - | 26.5K | 26.5K | - | - | |
| 1369 | - | 100 | 36 | 12B16.5 | - | - | - | - | - | - | 26.5K | 26.5K | - | - | |
| 1370 | - | 100 | 36 | 16B26 | - | - | - | - | - | - | 105F | 26.5K | 24 | 3/4X3 | |
| 1371 | - | 100 | 36 | 16WF40 | - | - | - | - | - | - | 335C | 205F | - | - | |
| 1372 | - | 100 | 36 | 16WF40 | - | - | - | - | - | - | 402A | 402A | - | - | X |
| 1373 | - | 100 | 36 | 16WF40 | - | - | - | - | - | - | 205F | 220I | 24 | 3/4X3 | |
| 1374 | - | 100 | 36 | 21WF68 | - | - | - | - | - | - | 106G | 111J | (39) | 3/4X3(B) | |
| 1375 | - | 100 | 36 | 21WF55 | - | - | - | - | - | - | 106G | 111J | (39) | 3/4X3(B) | |
| 1376 | - | 100 | 36 | 10CH25 | - | - | - | - | - | - | 249B | 249B | - | - | |
| 1377 | 25X6 BU | 300 | 36 | - | 6 | 1 | 23 | 1/2 | - | - | 201G | 201G | - | - | |
| 1378 | - | 100 | 36 | 18WF45 | - | - | - | - | - | - | 26.5K | 26.5K | - | - | |
| 1379 | 25X7 BU | 300 | 36 | - | 7 | 1- 1/2 | 22 | 3/4 | - | - | 35.3K | 35.3K | - | - | |
| 1380 | 25X6 BU | 300 | 36 | - | 6 | 1 | 23 | 1/2 | - | - | 105E | 105E | - | - | |
| 1381 | 25X6 BU | 300 | 36 | - | 6 | 1- 1/2 | 22 | 5/8 | - | - | 201G | 170D | - | - | |
| 1382 | - | 100 | 36 | 12WF45 | - | - | - | - | - | - | 111M | 26.5K | (30) | 3/4X3 | |
| 1383 | - | 100 | 50 | 12WF50 | - | - | - | - | - | - | 313F | 236A | - | - | |
| 1384 | 25X6 BU | 300 | 36 | - | 6 | 1- 1/2 | 22 | 5/8 | - | - | 201G | 44.2K | - | - | |
| 1385 | 25X7 BU | 305 | 36 | - | 7 | 1 | 23 | 1/2 | - | - | 335D | 205G | - | - | |
| 1386 | 25X7 BU | 300 | 36 | - | 7 | 1- 1/2 | 22 | 3/4 | - | - | 35.3K | 35.3K | - | - | |
| 1387 | 38X7 BU | 301 | 36 | - | 7 | 1- 1/2 | 35 | 3/4 | - | - | 284A | 172B | - | - | 1 |
| 1388 | 25X7 BU | 300 | 36 | - | 7 | 1 | 23 | 1/2 | - | - | 403A | 403A | - | - | |
| 1389 | - | 100 | 50 | 12CH45.0 | - | - | - | - | - | - | 426A | 429A | - | - | |
| 1390 | - | 100 | 36 | 16B31 | - | - | - | - | - | - | 26.5K | 26.5K | 33 | 3/4X3 | |
| 1391 | - | 100 | 36 | 16WF40 | - | - | - | - | - | - | 220I | 208H | 39 | 3/4X3(C) | |
| 1392 | 16X7 WF | 400 | 36 | 16WF36 | 6 | 3/4 | - | - | FULL LENGTH | | 276A | 26.5K | 39 | 3/4X3(D) | |
| 1393 | - | 100 | 36 | 16WF36 | - | - | - | - | - | - | 26.5K | 105K | 39 | 3/4X3 | |
| 1394 | - | 100 | 36 | 8B13 | - | - | - | - | - | - | 17.4K | 17.4K | - | - | |
| 1395 | - | 100 | 36 | 16WF36 | - | - | - | - | - | - | 170B | 287G | (15) | 3/4X3(B) | |
| 1396 | - | 100 | 36 | 16WF45 | - | - | - | - | - | - | 303B | 395C | - | - | |
| 1397 | - | 100 | 36 | 10B15 | - | - | - | - | - | - | 17.4K | 17.4K | - | - | |
| 1398 | 30X9 BX | 251 | 36 | - | 9 | 1 | 28 | 3/8 | - | - | 347A | 347A | - | - | |
| 1399 | 25X7 BU | 300 | 36 | - | 7 | 1 | 23 | 1/2 | - | - | 205G | 220 | - | - | |

REMARKS

1 REINF. PLATES 5FT-10 X 5/8

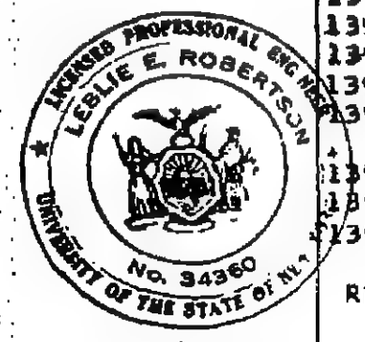

**SKILLING-HELLE-CHRISTIANSEN-ROBERTSON** — **Civil & Structural Engineers**

PROJECT: THE WORLD TRADE CENTER | TITLE: BEAM SCHEDULE TOWERS A AND B | DATE: 1/22/68

REVISIONS

| BEAM NO. | SIZE | TYPE | FY | SHAPE | PLATE 1 WIDTH | PLATE 1 THICK | PLATE 2 WIDTH | PLATE 2 THICK | DIMENSIONS LENGTH | DIMENSIONS DIM. A | SUPPORTS LEFT | SUPPORTS RIGHT | STUDS NO. | STUDS SIZE | REMARKS |
|---|---|---|---|---|---|---|---|---|---|---|---|---|---|---|---|
| 1400 | - | 100 | 36 | 16WF50 | - | - | - | - | - | - | 26.5K | 105B | (10) | 3/4X3R | |
| 1401 | - | 100 | 36 | 16WF45 | - | - | - | - | - | - | 106D | 106D | 39 | 3/4X3 | |
| 1402 | - | 100 | 36 | 16WF45 | - | - | - | - | - | - | 106D | 106D | 39 | 3/4X3 | |
| 1403 | - | 100 | 36 | 16WF36 | - | - | - | - | - | - | 208H | 276A | (8) | 3/4X3 | |
| 1404 | - | 100 | 36 | 16WF40 | - | - | - | - | - | - | 106E | 106D | 39 | 3/4X3 | |
| 1405 | - | 100 | 36 | 16WF40 | - | - | - | - | - | - | 106F | 111I | 39 | 3/4X3 | X |
| 1406 | - | 100 | 36 | 8B13 | - | - | - | - | - | - | 17.4K | 17.4K | 11 | 3/4X3 | |
| 1407 | - | 100 | 36 | 8B13 | - | - | - | - | - | - | 17.4K | 17.4K | 9 | 3/4X3 | |
| 1408 | - | 100 | 36 | 14B22 | - | - | - | - | - | - | 201F | 201F | 16 | 3/4X3 | |
| 1409 | - | 100 | 50 | 16WF50 | - | - | - | - | - | - | 106E | 106D | (12) | 3/4X3(C) | |
| 1410 | - | 100 | 36 | 16WF40 | - | - | - | - | - | - | 335C | 205F | - | - | 1 |
| 1411 | - | 100 | 36 | 16WF40 | - | - | - | - | - | - | 402A | 402A | - | - | |
| 1412 | - | 100 | 36 | 16WF40 | - | - | - | - | - | - | 205F | 220M | - | - | |
| 1413 | - | 100 | 36 | 16WF40 | - | - | - | - | - | - | 106E | 106D | 39 | 3/4X3 | |
| 1414 | - | 100 | 36 | 16WF45 | - | - | - | - | - | - | 220I | 292A | 39 | 3/4X3 | |
| 1415 | - | 100 | 36 | 16WF36 | - | - | - | - | - | - | 26.5K | 374 | 39 | 3/4X3 | |
| 1416 | - | 100 | 36 | 16WF45 | - | - | - | - | - | - | 106D | 111L | (40) | 3/4X3 | |
| 1417 | - | 100 | 36 | 16WF45 | - | - | - | - | - | - | 310B | 395C | - | - | |
| 1418 | - | 100 | 36 | 16WF40 | - | - | - | - | - | - | 276A | 26.5K | 39 | 3/4X3 | |
| 1419 | - | 100 | 36 | 16WF45 | - | - | - | - | - | - | 106D | 106D | (39) | 3/4X3 | |
| 1420 | - | 100 | 36 | 16WF40 | - | - | - | - | - | - | 111A | 106D | (39) | 3/4X3 | |
| 1421 | - | 100 | 36 | 14WF38 | - | - | - | - | - | - | 26.5K | 276A | (20) | 3/4X3 | |
| 1422 | - | 100 | 36 | 16WF58 | - | - | - | - | - | - | 26.5K | 26.5K | - | - | |
| 1423 | - | 100 | 36 | 16WF58 | - | - | - | - | - | - | 456D | 26.5K | - | - | |
| 1424 | 25X6 BU | 300 | 36 | - | 6 | 1 | 23 | 1/2 | - | - | 105E | 278A | - | - | |
| 1425 | 30X9 BX | 251 | 36 | - | 9 | 1 | 28 | 3/8 | - | - | 347A | 347A | - | - | |
| 1426 | - | 100 | 36 | 16WF58 | - | - | - | - | - | - | 26.5K | 26.5K | - | - | |
| 1427 | 25X7 BU | 300 | 36 | - | 7 | 1- 1/2 | 22 | 3/4 | - | - | 479A | 174B | - | - | |
| 1428 | 25X6 BU | 300 | 36 | - | 6 | 1- 1/2 | 22 | 5/8 | - | - | 105E | 44.2K | - | - | |
| 1429 | 38X7 BU | 301 | 36 | - | 7 | 1- 3/4 | 34-1/2 | 3/4 | - | - | 220I | 270A | - | - | 2 |
| 1430 | 25X7 BU | 300 | 36 | - | 7 | 1- 1/2 | 22 | 3/4 | - | - | 338E | 278A | - | - | |
| 1431 | - | 100 | 36 | 14B22 | - | - | - | - | - | - | 26.5K | 26.5K | - | - | |
| 1432 | 16X5-1/2BX | 200 | 36 | - | 4 | 3/8 | 16 | 3/4 | - | - | 294D | 247G | - | - | |
| 1433 | - | 100 | 36 | 16WF50 | - | - | - | - | - | - | 111I | 106F | 40 | 3/4X3 | |

REMARKS

1 DETAIL 405 LEFT END OF BEAM
2 REINF. PLATES 6FT-0 X 3/4

LICENSED PROFESSIONAL ENGINEER LESLIE E. ROBERTSON No. 34360 UNIVERSITY OF THE STATE OF NEW YORK

**SKILLING-HELLE-CHRISTIANSEN-ROBERTSON** — **Civil & Structural Engineers**

PROJECT: THE WORLD TRADE CENTER | TITLE: BEAM SCHEDULE TOWERS A AND B | DATE: 1/24/68

REVISIONS

| BEAM NO. | SIZE | TYPE | FY | PLATE 1 SHAPE | PLATE 1 WIDTH | PLATE 1 THICK | PLATE 2 WIDTH | PLATE 2 THICK | DIMENSIONS LENGTH | DIMENSIONS DIM. A | SUPPORTS LEFT | SUPPORTS RIGHT | STUDS NO. | STUDS SIZE | REMARKS |
|---|---|---|---|---|---|---|---|---|---|---|---|---|---|---|---|
| 1434 | - | 100 | 36 | 16WF45 | - | - | - | - | - | - | 1111 | 106F | 40 | 3/4X3 | |
| 1435 | - | 100 | 36 | 12WF27 | - | - | - | - | - | - | 26.5K | 26.5K | 19 | 3/4X3 | |
| 1436 | - | 100 | 36 | 8B13 | - | - | - | - | - | - | 17.4K | 17.4K | - | - | |
| 1437 | - | 100 | 36 | 16WF40 | - | - | - | - | - | - | 401A | 401A | - | - | |
| 1438 | - | 100 | 36 | 16WF40 | - | - | - | - | - | - | 220M | 205F | - | - | |
| 1439 | - | 100 | 36 | 16WF40 | - | - | - | - | - | - | 111I | 106F | 54 | 3/4X3 | |
| 1440 | - | 100 | 36 | 16WF40 | - | - | - | - | - | - | 111I | 106F | 54 | 3/4X3 | |
| 1441 | - | 100 | 36 | 14WF48 | - | - | - | - | - | - | 26.5K | 105K | 12 | 3/4X4-1/2B | |
| 1442 | - | 100 | 50 | 16WF45 | - | - | - | - | - | - | 106D | 111L | 30 | 3/4X3 | |
| 1443 | - | 100 | 36 | 16B26 | - | - | - | - | - | - | 26.5K | 294D | - | - | |
| 1444 | - | 100 | 36 | 12WF27 | - | - | - | - | - | - | 26.5K | 26.5K | 19 | 3/4X4-1/2 | |
| 1445 | - | 100 | 36 | 16WF40 | - | - | - | - | - | - | 205F | 335C | - | - | |
| 1446 | 25X7 BU | 300 | 36 | - | 7 | 1- 1/2 | 22 | 3/4 | - | - | 220N | 205G | - | - | |
| 1447 | - | 100 | 36 | 16WF40 | - | - | - | - | - | - | 404A | 401A | - | - | |
| 1448 | - | 100 | 36 | 16WF40 | - | - | - | - | - | - | 205F | 335C | - | - | |
| 1449 | 18X4 CH | 516 | 50 | 18CH42.7 | - | - | - | - | - | - | 249B | 246A | - | - | |
| 1450 | - | 100 | 36 | 12B19 | - | - | - | - | - | - | 105F | 26.5K | 21 | 3/4X3 | |
| 1451 | - | 100 | 36 | 16B26 | - | - | - | - | - | - | 105D | 105F | 8 | 3/4X3 | |
| 1452 | - | 100 | 50 | 16WF45 | - | - | - | - | - | - | 106D | 111L | 30 | 3/4X3 | |
| 1453 | - | 100 | 36 | 8B13 | - | - | - | - | - | - | 17.4K | 17.4K | - | - | |
| 1454 | - | 100 | 50 | 12B16.5 | - | - | - | - | - | - | 26.5K | 26.5K | - | - | |
| 1455 | - | 100 | 36 | 12WF27 | - | - | - | - | - | - | 26.5K | 26.5K | 19 | 3/4X4-1/2 | |
| 1456 | - | 100 | 36 | 16WF45 | - | - | - | - | - | - | 106D | 106D | 28 | 3/4X3 | |
| 1457 | - | 100 | 50 | 16B31 | - | - | - | - | - | - | 402A | 173B | - | - | |
| 1458 | - | 100 | 36 | 6CH8.2 | - | - | - | - | - | - | 504 | 504 | - | - | |
| 1459 | - | 100 | 36 | 6CH8.2 | - | - | - | - | - | - | 504 | 504 | - | - | |
| 1460 | - | 100 | 36 | 6B12 | - | - | - | - | - | - | 504 | 504 | - | - | |
| 1461 | - | 100 | 36 | 15CH33.9 | - | - | - | - | - | - | 315 | 315 | - | - | |
| 1462 | - | 100 | 36 | 15CH33.9 | - | - | - | - | - | - | 26.5K | 26.5K | - | - | |
| 1463 | 15X3-3/8CH | 505 | 36 | 15CH33.9 | 2-3/8 | 1- 1/4 | - | - | - | - | 315 | 232 | - | - | |
| 1464 | - | 100 | 36 | 16WF36 | - | - | - | - | - | - | 26.5K | 26.5K | - | - | |
| 1465 | - | 100 | 50 | 14WF34 | - | - | - | - | - | - | 106D | 106D | 47 | 3/4X3 | |
| 1466 | - | 100 | 36 | 16B31 | - | - | - | - | - | - | 220D | 254C | - | - | |

REMARKS

1 DETAIL 404 RIGHT END OF BEAM
2 DETAIL 405 RIGHT END OF BEAM

* HOLD

LICENSED PROFESSIONAL ENGINEER — LESLIE E. ROBERTSON — No. 34360 — UNIVERSITY OF THE STATE OF NEW YORK

DRAWING

**SKILLING-HELLE-CHRISTIANSEN-ROBERTSON** — **Civil & Structural Engineers**

PROJECT: THE WORLD TRADE CENTER | TITLE: BEAM SCHEDULE TOWERS A AND B | DATE: 1/22/68

REVISIONS

| BEAM NO. | SIZE | TYPE | FY | SHAPE | PLATE 1 WIDTH | PLATE 1 THICK | PLATE 2 WIDTH | PLATE 2 THICK | DIMENSIONS LENGTH | DIMENSIONS DIM. A | SUPPORTS LEFT | SUPPORTS RIGHT | STUDS NO. | STUDS SIZE | REMARKS |
|---|---|---|---|---|---|---|---|---|---|---|---|---|---|---|---|
| 1467 | - | 100 | 36 | 16B31 | - | - | - | - | - | - | 254C | 254C | - | - | |
| 1468 | - | 100 | 36 | 16B31 | - | - | - | - | - | - | 254C | 335G | | | 2 |
| 1469 | - | 100 | 36 | 16B31 | - | - | - | - | - | - | 335G | 254C | - | - | |
| 1470 | - | 100 | 36 | 16B31 | - | - | - | - | - | - | 254C | 254C | - | - | |
| 1471 | - | 100 | 36 | 16B31 | - | - | - | - | - | - | 254C | 220D | - | - | |
| 1472 | - | 100 | 36 | 16B31 | - | - | - | - | - | - | 220D | 254B | - | - | |
| 1473 | - | 100 | 36 | 16B31 | - | - | - | - | - | - | 254B | 254B | - | - | |
| 1474 | - | 100 | 36 | 16B31 | - | - | - | - | - | - | 254B | 254B | - | - | 2 |
| 1475 | - | 100 | 50 | 16B31 | - | - | - | - | - | - | 335H | 254B | - | - | |
| 1476 | - | 100 | 36 | 16B31 | - | - | - | - | - | - | 254B | 254B | - | - | |
| 1477 | - | 100 | 36 | 16B31 | - | - | - | - | - | - | 254B | 220D | - | - | |
| 1478 | - | 100 | 36 | 16WF40 | - | - | - | - | - | - | 402A | 402A | - | - | |
| 1479 | - | 100 | 36 | 16WF40 | - | - | - | - | - | - | 205F | 220I | - | - | |
| 1480 | 16X4 BX | 200 | 36 | | 2- 1/2 | 3/8 | 16 | 3/4 | - | - | 477A | 477A | - | - | |
| 1481 | 16X4 BX | 200 | 36 | | 2- 1/2 | 3/8 | 16 | 3/4 | - | - | 257A | 258B | - | - | |
| 1482 | - | 404 | 50 | 16WF50 | - | - | - | - | - | - | 274B | 282A | 26 | 3/4X3 | |
| 1483 | - | 404 | 50 | 16WF50 | - | - | - | - | - | - | 26.5K | 274B | 26 | 3/4X3 | |
| 1484 | - | 404 | 50 | 16WF50 | - | - | - | - | - | - | 274B | 338D | 26 | 3/4X3 | |
| 1485 | - | 100 | 36 | 16WF50 | - | - | - | - | - | - | 208H | 287G | 39 | 3/4X3D | |
| 1486 | - | 100 | 36 | 16WF50 | - | - | - | - | - | - | 208H | 208H | 39 | 3/4X3D | |
| 1487 | - | 100 | 50 | 16WF50 | - | - | - | - | - | - | 208H | 220I | 39 | 3/4X3D | |
| 1488 | - | 100 | 36 | 16WF36 | - | - | - | - | - | - | 307C | 208H | 18 | 3/4X3 | |
| 1489 | - | 100 | 36 | 12WF27 | - | - | - | - | - | - | 335C | 26.5K | 18 | 3/4X3 | |
| 1490 | - | 100 | 36 | 12WF27 | - | - | - | - | - | - | 310B | 26.5K | 15 | 3/4X3 | |
| 1491 | - | 100 | 50 | 15CH40.0 | - | - | - | - | - | - | 315A | 232A | - | - | |
| 1492 | - | 100 | 36 | 12B16.5 | - | - | - | - | - | - | 26.5K | 26.5K | - | - | |
| 1493 | - | 100 | 36 | 14B22 | - | - | - | - | - | - | 26.5K | 475B | 24 | 3/4X3 | |
| 1494 | - | 100 | 36 | 8B13 | - | - | - | - | - | - | 17.4K | 17.4K | 11 | 3/4X3 | |
| 1495 | 16X4 BX | 200 | 36 | - | 2-1/2 | 3/8 | 16 | 3/4 | - | - | 372A | 282A | - | - | |
| 1496 | 16X5-1/28X | 206 | 36 | - | 4 | 3/8 | 16 | 3/4 | - | - | 465A | 450 | - | - | |
| 1497 | - | 100 | 36 | 16WF45 | - | - | - | - | - | - | 106D | 106D | 39 | 3/4X3 | |
| 1498 | - | 100 | 36 | 16WF40 | - | - | - | - | - | - | 335C | 205F | - | - | 1 |
| 1499 | - | 100 | 36 | 16WF40 | - | - | - | - | - | - | 402A | 402A | - | - | |

REMARKS

1 DETAIL 405 LEFT END OF BEAM
2 DETAIL 406 RIGHT END OF BEAM

LICENSED PROFESSIONAL ENGINEER LESLIE E. ROBERTSON No. 34360 UNIVERSITY OF THE STATE OF NEW YORK

Sheet- 45

**SKILLING, HELLE, CHRISTIANSEN, ROBERTSON** — **Structural & Civil Engineers**

PROJECT: THE WORLD TRADE CENTER | TITLE: BEAM SCHEDULE TOWERS A AND B | DATE: 11/22/68

REVISIONS

| BEAM NO. | SIZE | TYPE | FY | PLATE 1 SHAPE | PLATE 1 WIDTH | PLATE 1 THICK | PLATE 2 WIDTH | PLATE 2 THICK | DIMENSIONS LENGTH | DIMENSIONS DIM. A | SUPPORTS LEFT | SUPPORTS RIGHT | STUDS NO. | STUDS SIZE | REMARKS |
|---|---|---|---|---|---|---|---|---|---|---|---|---|---|---|---|
| 1500 | - | 100 | 36 | 16WF40 | - | - | - | - | - | - | 205F | 220I | - | - | |
| 1501 | - | 100 | 36 | 12B16.5 | - | - | - | - | - | - | 26.5K | 26.5K | 8 | 3/4X3 | |
| 1502 | - | 100 | 36 | 16WF36 | - | - | - | - | - | - | 26.5K | 208H | 15 | 3/4X4-1/2B | |
| 1503 | - | 100 | 36 | 16WF36 | - | - | - | - | - | - | 170B | 287G | 15 | 3/4X3B | |
| 1504 | - | 100 | 36 | 16WF45 | - | - | - | - | - | - | 106D | 111L | 15 | 3/4X3C | |
| 1505 | - | 100 | 36 | 16WF45 | - | - | - | - | - | - | 303B | 395B | - | - | |
| 1506 | - | 100 | 36 | 12WF27 | - | - | - | - | - | - | 283G | 105L | 19 | 3/4X4-1/2 | |
| 1507 | - | 100 | 36 | 16WF36 | - | - | - | - | - | - | 208H | 284A | 8 | 3/4X3 | |
| 1508 | - | 100 | 36 | 14B22 | - | - | - | - | - | - | 105D | 105F | 16 | 3/4X4-1/2 | |
| 1509 | - | 100 | 36 | 16B31 | - | - | - | - | - | - | 220D | 294D | - | - | |
| 1510 | - | 100 | 36 | 16B31 | - | - | - | - | - | - | 463C | 463C | - | - | |
| 1511 | - | 100 | 36 | 16B31 | - | - | - | - | - | - | 294D | 294D | - | - | |
| 1512 | - | 100 | 36 | 16B31 | - | - | - | - | - | - | 294D | 463C | - | - | |
| 1513 | - | 100 | 36 | 16B31 | - | - | - | - | - | - | 463C | 294D | - | - | |
| 1514 | - | 100 | 36 | 16B26 | - | - | - | - | - | - | 370C | 301C | 16 | 3/4X3 | |
| 1515 | - | 100 | 36 | 16B26 | - | - | - | - | - | - | 111P | 111P | 16 | 3/4X3 | |
| 1516 | - | 100 | 36 | 16B31 | - | - | - | - | - | - | 294D | 294D | - | - | |
| 1517 | - | 100 | 36 | 16B31 | - | - | - | - | - | - | 294D | 220D | - | - | |
| 1518 | - | 100 | 36 | 16B26 | - | - | - | - | - | - | 235C | 370J | 15 | 3/4X3 | |
| 1519 | - | 100 | 36 | 16B31 | - | - | - | - | - | - | 220L | 294D | - | - | |
| 1520 | - | 100 | 36 | 16B31 | - | - | - | - | - | - | 294D | 220L | - | - | |
| 1521 | - | 100 | 36 | 16B26 | - | - | - | - | - | - | 235C | 370J | 15 | 3/4X3 | |
| 1522 | - | 100 | 36 | 12WF45 | - | - | - | - | - | - | 26.5K | 368B | 10 | 3/4X4-1/2B | |
| 1523 | - | 100 | 36 | 12WF27 | - | - | - | - | - | - | 283G | 105L | 15 | 3/4X4-1/2 | |
| 1524 | - | 100 | 36 | 16WF40 | - | - | - | - | - | - | 208H | 287G | 39 | 3/4X3D | |
| 1525 | - | 100 | 36 | 18WF45 | - | - | - | - | - | - | 456D | 26.5K | - | - | |
| 1526 | - | 404 | 36 | 16WF45 | - | - | - | - | - | - | 274B | 282A | 26 | 3/4X3 | |
| 1527 | - | 100 | 36 | 8B13 | - | - | - | - | - | - | 105H | 105H | - | - | |
| 1528 | - | 100 | 36 | 18WF45 | - | - | - | - | - | - | 26.5K | 456A | - | - | |
| 1529 | - | 100 | 36 | 16WF40 | - | - | - | - | - | - | 220F | 205F | - | - | |
| 1530 | - | 100 | 36 | 16WF40 | - | - | - | - | - | - | 401A | 401A | - | - | |
| 1531 | - | 100 | 36 | 16WF40 | - | - | - | - | - | - | 205F | 335C | - | - | 1 |
| 1532 | - | 100 | 36 | 16WF40 | - | - | - | - | - | - | 335C | 205F | - | - | 2 |
| 1533 | - | 100 | 36 | 16WF40 | - | - | - | - | - | - | 401A | 205F | - | - | |

REMARKS

1 DETAIL 405 RIGHT END OF BEAM
2 DETAIL 405 LEFT END OF BEAM

LICENSED PROFESSIONAL ENGINEER — LESLIE E. ROBERTSON — No. 34360 — UNIVERSITY OF THE STATE OF NEW YORK

**SKILLING-HELLE-CHRISTIANSEN-ROBERTSON** — **Civil & Structural Engineers**

PROJECT: THE WORLD TRADE CENTER | TITLE: BEAM SCHEDULE TOWERS A AND B | DATE: 1/22/68

REVISIONS

| BEAM NO. | SIZE | TYPE | FY | PLATE 1 SHAPE | PLATE 1 WIDTH | PLATE 1 THICK | PLATE 2 WIDTH | PLATE 2 THICK | DIMENSIONS LENGTH | DIMENSIONS DIM. A | SUPPORTS LEFT | SUPPORTS RIGHT | STUDS NO. | STUDS SIZE | REMARKS |
|---|---|---|---|---|---|---|---|---|---|---|---|---|---|---|---|
| 1534 | - | 411 | 36 | 16WF40 | - | - | - | - | - | - | 407A | 220K | - | - | |
| 1535 | - | 404 | 36 | 16WF50 | - | - | - | - | - | - | 338D | 274B | 26 | 3/4X3 | |
| 1536 | - | 404 | 36 | 16WF50 | - | - | - | - | - | - | 274B | 282A | 26 | 3/4X3 | |
| 1537 | - | 404 | 36 | 16WF50 | - | - | - | - | - | - | 26.5K | 274B | 26 | 3/4X3 | |
| 1538 | - | 404 | 36 | 16WF50 | - | - | - | - | - | - | 274B | 338D | 26 | 3/4X3 | |
| 1539 | - | 100 | 36 | 14WF53 | - | - | - | - | - | - | 220I | 368B | 39 | 3/4X3 | D |
| 1540 | - | 100 | 36 | 14WF53 | - | - | - | - | - | - | 368B | 211A | 39 | 3/4X3 | D |
| 1541 | - | 100 | 36 | 14WF53 | - | - | - | - | - | - | 368B | 368B | 39 | 3/4X3 | D |
| 1542 | - | 100 | 36 | 14WF53 | - | - | - | - | - | - | 368B | 220I | 39 | 3/4X3 | D |
| 1543 | 16X4 BX | 200 | 36 | - | 2-1/2 | 3/8 | 16 | 3/4 | - | - | 296C | 274B | - | - | |
| 1544 | - | 100 | 36 | 16WF45 | - | - | - | - | - | - | 106E | 106D | 39 | 3/4X3 | |
| 1545 | - | 100 | 36 | 16WF40 | - | - | - | - | - | - | 220L | 205F | - | - | |
| 1546 | - | 100 | 36 | 12B16.5 | - | - | - | - | - | - | 26.5K | 26.5K | - | - | |
| 1547 | - | 100 | 36 | 14B22 | - | - | - | - | - | - | 201F | 26.5K | 19 | 3/4X3 | |
| 1548 | - | 449 | 36 | 16B31 | - | - | - | - | - | - | 463C | 26.5K | - | - | |
| 1549 | - | 100 | 36 | 12B19 | - | - | - | - | - | - | 26.5K | 26.5K | 36 | 5/8X2 | |
| 1550 | - | 100 | 36 | 8B13 | - | - | - | - | - | - | 17.4K | 17.4K | 16 | 5/8X2 | |
| 1551 | - | 100 | 50 | 16B26 | - | - | - | - | - | - | 105D | 105F | 40 | 3/4X4-1/2 | |
| 1552 | - | 100 | 36 | 12B19 | - | - | - | - | - | - | 105F | 26.5K | 15 | 3/4X3 | |
| 1553 | - | 100 | 36 | 14B22 | - | - | - | - | - | - | 201F | 201F | 12 | 3/4X3 | |
| 1554 | - | 100 | 36 | 14B22 | - | - | - | - | - | - | 201F | 26.5K | 19 | 3/4X3 | |
| 1555 | - | 100 | 50 | 12B19 | - | - | - | - | - | - | 26.5K | 26.5K | 30 | 3/4X3 | |
| 1556 | - | 100 | 36 | 8B13 | - | - | - | - | - | - | 105H | 105H | 12 | 3/4X3 | |
| 1557 | - | 100 | 36 | 16WF40 | - | - | - | - | - | - | 106D | 111I | 56 | 3/4X3 | |
| 1558 | - | 100 | 36 | 16WF40 | - | - | - | - | - | - | 220M | 205F | - | - | |
| 1559 | - | 100 | 36 | 16WF40 | - | - | - | - | - | - | 401A | 401A | - | - | |
| 1560 | - | 100 | 36 | 16WF40 | - | - | - | - | - | - | 205F | 335C | - | - | 1 |
| 1561 | - | 100 | 36 | 16WF40 | - | - | - | - | - | - | 335C | 307D | - | - | |
| 1562 | - | 100 | 36 | 16WF40 | - | - | - | - | - | - | 401A | 401A | - | - | 2 |
| 1563 | - | 100 | 36 | 16WF40 | - | - | - | - | - | - | 205F | 220M | - | - | |
| 1564 | - | 100 | 36 | 16B31 | - | - | - | - | - | - | 294D | 463C | | | |
| 1565 | - | 100 | 50 | 14B22 | - | - | - | - | - | - | 26.5K | 26.5K | 15 | 3/4X3 | B |
| 1566 | - | 100 | 36 | 8B13 | - | - | - | - | - | - | 17.4K | 17.4K | - | - | |

REMARKS

1 DETAIL 405 RIGHT END OF BEAM
2 DETAIL 405 LEFT END OF BEAM

LICENSED PROFESSIONAL ENGINEER — LESLIE E. ROBERTSON — No. 34360 — UNIVERSITY OF THE STATE OF NEW YORK

**SKILLING-HELLE-CHRISTIANSEN-ROBERTSON** — **Civil & Structural Engineers**

PROJECT: THE WORLD TRADE CENTER | TITLE: BEAM SCHEDULE TOWERS A AND B | DATE: 1/22/68

REVISIONS

| BEAM NO. | SIZE | TYPE | FY | SHAPE | PLATE 1 WIDTH | PLATE 1 THICK | PLATE 2 WIDTH | PLATE 2 THICK | DIMENSIONS LENGTH | DIMENSIONS DIM. A | SUPPORTS LEFT | SUPPORTS RIGHT | STUDS NO. | STUDS SIZE | REMARKS |
|---|---|---|---|---|---|---|---|---|---|---|---|---|---|---|---|
| 1567 | - | 100 | 50 | 16WF45 | - | - | - | - | - | - | 106D | 106D | (42) | 3/4X3 | |
| 1568 | - | 100 | 36 | 12WF27 | - | - | - | - | - | - | | 26.5K | 19 | 3/4X(4-1/2) | |
| 1569 | - | 404 | 36 | 16WF45 | - | - | - | - | - | - | 26.5K | 282A | (26) | 3/4X3 | |
| 1570 | - | 449 | 36 | 16831 | - | - | - | - | - | - | 463C | 26.5K | - | - | |
| 1571 | - | 100 | 50 | 12819 | - | - | - | - | - | - | 283R | 111K | 30 | 3/4X3 | |
| 1572 | - | 449 | 50 | 16WF4 | - | - | - | - | - | - | 111A | 106D | (28) | 3/4X3 | X |
| 1573 | - | 100 | 36 | 12816.5 | - | - | - | - | - | - | 26.5K | 26.5K | - | - | |
| 1574 | - | 100 | 36 | 16WF36 | - | - | - | - | - | - | 306C | 208H | (12) | 3/4X3 | |
| 1575 | - | 100 | 36 | 16831 | - | - | - | - | - | - | 294D | 463C | - | - | |
| 1576 | - | 100 | 36 | 16826 | - | - | - | - | - | - | 111P | 111P | (15) | 3/4X3 | |
| 1577 | - | 100 | 36 | 12816.5 | - | - | - | - | - | - | 26.5K | 26.5K | 15 | 3/4X3 | |
| 1578 | - | 100 | 36 | 12816.5 | - | - | - | - | - | - | 303C | 26.5K | (10) | 3/4X3(H) | |
| 1579 | - | 100 | 36 | 14822 | - | - | - | - | - | - | 301C | 26.5K | (12) | 3/4X3(K) | |
| 1580 | - | 100 | 36 | 16WF36 | - | - | - | - | - | - | 287G | 208H | 39 | 3/4X3 | |
| 1581 | - | 100 | 50 | 16WF36 | - | - | - | - | - | - | 26.5K | 276A | (30) | 3/4X3 | |
| 1582 | - | 100 | 50 | 16WF36 | - | - | - | - | - | - | 170B | 287G | (15) | 3/4X3(B) | |
| 1583 | - | 100 | 50 | 12816.5 | - | - | - | - | - | - | 26.5K | 26.5K | 18 | 3/4X3 | |
| 1584 | - | 100 | 36 | 12816.5 | - | - | - | - | - | - | 26.5K | 26.5K | 8 | 3/4X3 | |
| 1585 | - | 100 | 36 | 16WF40 | - | - | - | - | - | - | 26.5K | 287G | (39) | 3/4X3(J) | |
| 1586 | - | 100 | 36 | 14WF48 | - | - | - | - | - | - | 26.5K | 105K | 56 | 3/4X3 | |
| 1587 | - | 100 | 36 | 12WF27 | - | - | - | - | - | - | 26.5K | 26.5K | 19 | 3/4X(4-1/2) | |
| 1588 | - | 100 | 36 | 12819 | - | - | - | - | - | - | 335I | 235C | 15 | 3/4X3 | |
| 1589 | - | 100 | 50 | 16WF45 | - | - | - | - | - | - | 106D | 111L | (40) | 3/4X3 | |
| 1590 | - | 100 | 50 | 16831 | - | - | - | - | - | - | 364E | 335B | (30) | 3/4X3 | 1 |
| 1591 | - | 100 | 36 | 16WF45 | - | - | - | - | - | - | 303C | 395C | (10) | 3/4X3 | |
| 1592 | - | 100 | 36 | 16826 | - | - | - | - | - | - | 26.5K | 294D | - | - | |
| 1593 | - | 100 | 36 | 12816.5 | - | - | - | - | - | - | 26.5K | 26.5K | 15 | 3/4X3 | |
| 1594 | - | 100 | 36 | 12816.5 | - | - | - | - | - | - | 26.5K | 26.5K | - | - | |
| 1595 | 16X5-1/2BX | 204 | 36 | - | 4 | 3/8 | 16 | 3/4 | - | - | 206A | 294D | - | - | |
| 1596 | 16X5-1/2BX | 201 | 36 | - | 4 | 3/8 | 16 | 3/4 | - | - | 294D | 247G | - | - | |
| 1597 | - | 100 | 36 | 16WF45 | - | - | - | - | - | - | 276A | 26.5K | (52) | 3/4X3 | |
| 1598 | - | 100 | 36 | 16831 | - | - | - | - | - | - | 26.5K | 26.5K | 24 | 3/4X3 | |
| 1599 | - | 100 | 36 | 12WF27 | - | - | - | - | - | - | 283G | 105L | (19) | 3/4X(4-1/2) | |

REMARKS

1 DETAIL 405 RIGHT END OF BEAM

LICENSED PROFESSIONAL ENG'R LESLIE E. ROBERTSON No. 34360 UNIVERSITY OF THE STATE OF NEW YORK

5-591-45

**SKILLING-HELLE-CHRISTIANSEN-ROBERTSON** — **Civil & Structural Engineers**

PROJECT: THE WORLD TRADE CENTER | TITLE: BEAM SCHEDULE TOWERS A AND B | DATE: 1/22/68

REVISIONS

| BEAM NO. | SIZE | TYPE | FY | SHAPE | PLATE 1 WIDTH | PLATE 1 THICK | PLATE 2 WIDTH | PLATE 2 THICK | DIMENSIONS LENGTH | DIMENSIONS DIM. A | SUPPORTS LEFT | SUPPORTS RIGHT | STUDS NO. | STUDS SIZE | REMARKS |
|---|---|---|---|---|---|---|---|---|---|---|---|---|---|---|---|
| 1600 | 18X4 CH | 509 | 50 | 18CH58.0 | - | - | - | - | - | - | 232C | 246C | - | - | |
| 1601 | - | 100 | 36 | 18CH42.7 | - | - | - | - | - | - | 410A | 411A | - | - | |
| 1602 | 18X4 CH | 100 | 36 | 18CH45.8 | - | - | - | - | - | - | 246C | 249C | - | - | |
| 1603 | - | 100 | 36 | 10CH25 | - | - | - | - | - | - | 249C | 249C | - | - | |
| 1604 | 18X4 CH | 508 | 50 | 18CH42.7 | 2-7/8 | 1- 1/4 | - | - | 24FT 0 | 1FT 0 | 249C | 246C | - | - | |
| 1605 | - | 100 | 36 | 18CH42.7 | - | - | - | - | - | - | 412A | 410A | - | - | |
| 1606 | - | 100 | 50 | 18CH58.0 | - | - | - | - | - | - | 246C | 232C | - | - | |
| 1607 | 18X4 CH | 500 | 36 | 18CH51.9 | - | - | - | - | - | - | 227 | 245 | - | - | |
| 1608 | 12X4 CH | 505 | 36 | 12CH40 | - | - | - | - | - | - | 26.5K | 26.5K | - | - | |
| 1609 | - | 100 | 36 | 15CH50 | - | - | - | - | - | - | 245 | 245 | - | - | |
| 1610 | 15X3-3/8CH | 503 | 36 | 15CH50 | - | - | - | - | - | - | 245 | 245 | - | - | |
| 1611 | 12X4 CH | 505 | 36 | 12CH40 | - | - | - | - | - | - | 26.5K | 26.5K | - | - | |
| 1612 | 18X4 CH | 500 | 36 | 18CH51.9 | - | - | - | - | - | - | 245 | 227 | - | - | |
| 1613 | 12X3 CH | 505 | 36 | 12CH50 | 2-7/8 | 1- 1/4 | - | - | - | - | 227 | 311 | - | - | |
| 1614 | - | 100 | 36 | 16WF36 | - | - | - | - | - | - | 287G | 368B | 39 | 3/4X3 | |
| 1615 | - | 404 | 36 | 16WF45 | - | - | - | - | - | - | 26.5K | 475A | 26 | 3/4X3 | |
| 1616 | - | 100 | 36 | 14B22 | - | - | - | - | - | - | 26.5K | 26.5K | 22 | 3/4X3 | |
| 1617 | 15X3-3/8CH | 505 | 36 | 15CH33.9 | 2-3/8 | 1- 1/4 | - | - | - | - | 315 | 232 | - | - | |
| 1618 | - | 100 | 50 | 12CH45.0 | - | - | - | - | - | - | 427A | 426A | - | - | |
| 1619 | - | 100 | 36 | 16WF36 | - | - | - | - | - | - | 287G | 208H | 39 | 3/4X3 | |
| 1620 | - | 100 | 36 | 15CH33.9 | - | - | - | - | - | - | 315 | 315 | - | - | |
| 1621 | - | 100 | 36 | 15CH40 | - | - | - | - | - | - | 26.5K | 26.5K | - | - | |
| 1622 | 15X3-3/8CH | 505 | 36 | 15CH40 | 2-3/8 | 1- 1/4 | - | - | - | - | 315 | 232 | - | - | |
| 1623 | - | 100 | 50 | 16WF40 | - | - | - | - | - | - | 335C | 205F | - | - | |
| 1624 | - | 100 | 36 | 16WF40 | - | - | - | - | - | - | 401A | 401A | - | - | |
| 1625 | - | 100 | 36 | 16WF40 | - | - | - | - | - | - | 205F | 220I | 33 | 3/4X3 | |
| 1626 | - | 404 | 36 | 16WF45 | - | - | - | - | - | - | 278 | 282 | 56 | 3/4X3 | |
| 1627 | - | 100 | 36 | 12B16.5 | - | - | - | - | - | - | 466 | 466 | 16 | 3/4X3 | |
| 1628 | - | 100 | 36 | 16B26 | - | - | - | - | - | - | 111Q | 283S | 14 | 3/4X3 | |
| 1629 | - | 100 | 36 | 16B26 | - | - | - | - | - | - | 111Q | 111O | 17 | 3/4X3 | |
| 1630 | - | 100 | 36 | 12B16.5 | - | - | - | - | - | - | 26.5K | 26.5K | 15 | 3/4X3 | |
| 1631 | - | 100 | 36 | 12B16.5 | - | - | - | - | - | - | 466 | 466 | 16 | 3/4X3 | |
| 1632 | - | 100 | 36 | 14B22 | - | - | - | - | - | - | 105F | 26.5K | 8 | 3/4X3 C | |
| 1633 | - | 100 | 36 | 16WF36 | - | - | - | - | - | - | 26.5K | 276A | 30 | 3/4X3 | |

LICENSED PROFESSIONAL ENGINEER — LESLIE E. ROBERTSON — No. 34360 — UNIVERSITY OF THE STATE OF NEW YORK

**SKILLING-HELLE-CHRISTIANSEN-ROBERTSON** — **Civil & Structural Engineers**

PROJECT: THE WORLD TRADE CENTER | TITLE: BEAM SCHEDULE TOWERS A AND B | DATE: 1/22/68

REVISIONS

| BEAM NO. | SIZE | TYPE | FY | SHAPE | PLATE 1 WIDTH | PLATE 1 THICK | PLATE 2 WIDTH | PLATE 2 THICK | DIMENSIONS LENGTH | DIMENSIONS DIM. A | SUPPORTS LEFT | SUPPORTS RIGHT | STUDS NO. | STUDS SIZE | REMARKS |
|---|---|---|---|---|---|---|---|---|---|---|---|---|---|---|---|
| 1634 | - | 100 | 36 | 16B31 | - | - | - | - | - | - | 220D | 364E | - | - | |
| 1635 | - | 100 | 36 | 16B31 | - | - | - | - | - | - | 364E | 364E | - | - | |
| 1636 | - | 100 | 50 | 16B31 | - | - | - | - | - | - | 307D | 364E | - | - | 3 |
| 1637 | - | 100 | 36 | 16B31 | - | - | - | - | - | - | 364E | 364E | - | - | |
| 1638 | - | 100 | 36 | 16B31 | - | - | - | - | - | - | 364E | 220D | - | - | |
| 1639 | - | 100 | 36 | 16WF40 | - | - | - | - | - | - | 316A | 251D | 39 | 3/4X3 | X |
| 1640 | - | 100 | 36 | 16WF40 | - | - | - | - | - | - | 402A | 402A | 39 | 3/4X3 | |
| 1641 | - | 100 | 36 | 16WF40 | - | - | - | - | - | - | 205F | 335C | 39 | 3/4X3 | 2 |
| 1642 | - | 100 | 36 | 16WF40 | - | - | - | - | - | - | 307C | 308A | 39 | 3/4X3 | 3 |
| 1643 | - | 100 | 36 | 16WF40 | - | - | - | - | - | - | 402A | 402A | 39 | 3/4X3 | |
| 1644 | - | 100 | 36 | 16WF40 | - | - | - | - | - | - | 251D | 316A | 39 | 3/4X3 | |
| 1645 | - | 100 | 36 | 8B13 | - | - | - | - | - | - | 17.4K | 17.4K | - | - | |
| 1646 | - | 100 | 36 | 16WF36 | - | - | - | - | - | - | 10.5K | 26.5K | 20 | 3/4X3 | |
| 1647 | - | 100 | 50 | 14B22 | - | - | - | - | - | - | 26.5K | 26.5K | 34 | 3/4X3 | |
| 1648 | - | 100 | 36 | 8B13 | - | - | - | - | - | - | 17.4K | 17.4K | - | - | |
| 1649 | - | 100 | 36 | 16WF40 | - | - | - | - | - | - | 270A | 287G | 44 | 3/4X3 (J) | |
| 1650 | - | 100 | 36 | 16B26 | - | - | - | - | - | - | 26.5K | 26.5K | 33 | 3/4X3 | |
| 1651 | - | 100 | 36 | 10B15 | - | - | - | - | - | - | 17.4K | 17.4K | - | - | |
| 1652 | - | 100 | 36 | 14WF38 | - | - | - | - | - | - | 106E | 106E | (39) | 3/4X3 (G) | |
| 1653 | 18X4 CH | 507 | 50 | 18CH51.9 | - | - | - | - | - | - | 229A | 245B | - | - | 1 |
| 1654 | 12X4 CH | 505 | 50 | 12CH50.0 | 2-7/8 | 3/4 | - | - | 12FT 3 | 1FT 0 | 440A | 441B | - | - | |
| 1655 | 15X3-3/8CH | 505 | 50 | 15CH40.0 | 2-1/2 | 1/2 | - | - | 26FT 1 | 1FT 0 | 245C | 245D | - | - | 4 |
| 1656 | 15X3-3/8CH | 503 | 50 | 15CH40.0 | 2-1/2 | 1/2 | - | - | 26FT 0 | 1FT 0 | 245D | 245C | - | - | 5 |
| 1657 | 12X4 CH | 505 | 50 | 12CH50.0 | 2-7/8 | 3/4 | - | - | 12FT 4 | 1FT 0 | 441B | 440A | - | - | |
| 1658 | 18X4 CH | 500 | 50 | 18CH51.9 | - | - | - | - | - | - | 245B | 229A | - | - | |
| 1659 | - | 100 | 50 | 12CH50.0 | - | - | - | - | - | - | 229A | 311A | - | - | |
| 1660 | - | 100 | 50 | 12CH45.0 | - | - | | | - | - | 428A | 426A | - | - | |
| 1661 | - | 100 | 36 | 15CH33.9 | - | - | - | - | - | - | 315A | 315D | - | - | |
| 1662 | - | 100 | 36 | 15CH33.9 | - | - | - | - | - | - | 422A | 423A | - | - | |
| 1663 | - | 100 | 50 | 15CH40.0 | - | - | - | - | - | - | 315A | 233A | - | - | |
| 1664 | - | 100 | 50 | 12CH50.0 | - | - | - | - | - | - | 428A | 351C | - | - | |
| 1665 | - | 100 | 36 | 16B26 | - | - | - | - | - | - | 307D | 111P | (15) | 3/4X3 | |
| 1666 | - | 100 | 50 | 15CH40.0 | - | - | - | - | - | - | 351A | 233A | - | - | |

REMARKS

1. REINF. PLATES 3FT 9 X 1
2. DETAIL 405 RIGHT END OF BEAM
3. DETAIL 405 LEFT END OF BEAM
4. DETAIL 442A RIGHT END OF BEAM
5. DETAIL 442A LEFT END OF BEAM

LICENSED PROFESSIONAL ENGINEER — LESLIE E. ROBERTSON — No. 34360 — UNIVERSITY OF THE STATE OF N.

**SKILLING, HELLE, CHRISTIANSEN, ROBERTSON** — Structural & Civil Engineers

PROJECT: THE WORLD TRADE CENTER | TITLE: BEAM SCHEDULE TOWERS A AND B | DATE: 11/22/68

REVISIONS

| BEAM NO. | SIZE | TYPE | FY | PLATE 1 SHAPE | PLATE 1 WIDTH | PLATE 1 THICK | PLATE 2 WIDTH | PLATE 2 THICK | DIMENSIONS LENGTH | DIMENSIONS DIM. A | SUPPORTS LEFT | SUPPORTS RIGHT | STUDS NO. | STUDS SIZE | REMARKS |
|---|---|---|---|---|---|---|---|---|---|---|---|---|---|---|---|
| 1667 | - | 100 | 50 | 12CH50.0 | - | - | - | - | - | - | 229A | 311A | - | - | |
| 1668 | - | 100 | 36 | 12WF27 | - | - | - | - | - | - | 26.5K | 26.5K | - | - | |
| 1669 | - | 100 | 36 | 16B26 | - | - | - | - | - | - | 26.5K | 294D | - | - | |
| 1670 | - | 507 | 36 | 18CH51.9 | - | - | - | - | - | - | 373A | 245B | - | - | |
| 1671 | 18X4 CH | 500 | 36 | 18CH51.9 | - | - | - | - | - | - | 245B | 373A | - | - | |
| 1672 | - | 100 | 50 | 12WF31 | - | - | - | - | - | - | 105L | 26.5K | 12 | 3/4X4-1/2C | X |
| 1673 | - | 100 | 36 | 12B19 | - | - | - | - | - | - | 26.5K | 26.5K | 15 | 3/4X3 | |
| 1674 | - | 100 | 36 | 14B22 | - | - | - | - | - | - | 105D | 105F | 8 | 3/4X3 | |
| 1675 | - | 100 | 36 | 14B22 | - | - | - | - | - | - | 26.5K | 26.5K | 8 | 3/4X3B | |
| 1676 | - | 100 | 36 | 9CH13.4 | - | - | - | - | - | - | 366C | 501A | - | - | |
| 1677 | - | 100 | 36 | 16WF36 | - | - | - | - | - | - | 208H | 26.5K | 8 | 3/4X3 | |
| 1678 | - | 100 | 36 | 14B22 | - | - | - | - | - | - | 26.5K | 26.5K | 10 | 3/4X3B | |
| 1679 | - | 100 | 36 | 12B16.5 | - | - | - | - | - | - | 26.5K | 26.5K | 15 | 3/4X3 | |
| 1680 | - | 100 | 36 | 12B19 | - | - | - | - | - | - | 26.5K | 105H | 15 | 3/4X4-1/2B | |
| 1681 | - | 100 | 36 | 16WF45 | - | - | - | - | - | - | 106D | 106D | 47 | 3/4X3 | |
| 1682 | - | 100 | 36 | 8B13 | - | - | - | - | - | - | 105H | 105H | 9 | 3/4X4-1/2 | |
| 1683 | - | 100 | 36 | 12B19 | - | - | - | - | - | - | 26.5K | 26.5K | 15 | 3/4X3 | |
| 1684 | - | 100 | 36 | 12B16.5 | - | - | - | - | - | - | 105H | 26.5K | 13 | 3/4X4-1/2C | |
| 1685 | - | 100 | 36 | 12B16.5 | - | - | - | - | - | - | 26.5K | 105L | - | - | |
| 1686 | - | 100 | 36 | 16WF45 | - | - | - | - | - | - | 26.5K | 284A | 30 | 3/4X3 | |
| 1687 | - | 449 | 36 | 16WF40 | - | - | - | - | - | - | 111A | 106D | 38 | 3/4X3 | |
| 1688 | - | 100 | 50 | 12B19 | - | - | - | - | - | - | 26.5K | 26.5K | 21 | 3/4X3 | |
| 1689 | - | 100 | 36 | 12B16.5 | - | - | - | - | - | - | 26.5K | 26.5K | - | - | |
| 1690 | - | 100 | 36 | 8B13 | - | - | - | - | - | - | 17.4K | 17.4K | 11 | 3/4X3 | |
| 1691 | - | 100 | 36 | 8B13 | - | - | - | - | - | - | 17.4K | 17.4K | 11 | 3/4X3 | |
| 1692 | - | 100 | 36 | 8B13 | - | - | - | - | - | - | 17.4K | 17.4K | 11 | 3/4X3 | |
| 1693 | - | 100 | 36 | 8B13 | - | - | - | - | - | - | 17.4K | 17.4K | 11 | 3/4X3 | |
| 1694 | - | 100 | 36 | 14B22 | - | - | - | - | - | - | 201F | 201F | 12 | 3/4X3 | |
| 1695 | - | 100 | 36 | 14B22 | - | - | - | - | - | - | 201F | 26.5K | 19 | 3/4X3 | |
| 1696 | - | 100 | 36 | 16WF36 | - | - | - | - | - | - | 26.5K | 201F | 30 | 3/4X3 | |
| 1697 | - | 449 | 36 | 16WF40 | - | - | - | - | - | - | 111A | 106D | 28 | 3/4X3 | |
| 1698 | - | 100 | 36 | 12B19 | - | - | - | - | - | - | 26.5K | 26.5K | 15 | 3/4X3 | |
| 1699 | - | 100 | 36 | 12B19 | - | - | - | - | - | - | 26.5K | 26.5K | 15 | 3/4X3 | |

REMARKS

1 DETAIL 406 LEFT END OF BEAM

LICENSED PROFESSIONAL ENGINEER — LESLIE E. ROBERTSON — No. 34360 — OF THE STATE OF NEW YORK

**SKILLING-HELLE-CHRISTIANSEN-ROBERTSON** — **Civil & Structural Engineers**

PROJECT: THE WORLD TRADE CENTER | TITLE: BEAM SCHEDULE TOWERS A AND B | DATE: 1/22/68

REVISIONS

| BEAM NO. | SIZE | TYPE | FY | SHAPE | PLATE 1 WIDTH | PLATE 1 THICK | PLATE 2 WIDTH | PLATE 2 THICK | DIMENSIONS LENGTH | DIMENSIONS DIM. A | SUPPORTS LEFT | SUPPORTS RIGHT | STUDS NO. | STUDS SIZE | REMARKS |
|---|---|---|---|---|---|---|---|---|---|---|---|---|---|---|---|
| 1700 | - | 100 | 36 | 14B22 | - | - | - | - | - | - | 283I | 170C | - | - | |
| 1701 | - | 100 | 36 | 8B13 | - | - | - | - | - | - | 105H | 105H | 11 | 3/4X4-1/2 | |
| 1702 | - | 100 | 36 | 12B16.5 | - | - | - | - | - | - | 105H | 26.5K | 15 | 3/4X4-1/2C | |
| 1703 | - | 100 | 36 | 16WF40 | - | - | - | - | - | - | 335C | 205F | - | - | 1 |
| 1704 | - | 100 | 36 | 16WF40 | - | - | - | - | - | - | 106F | 111I | 39 | 3/4X3 | |
| 1705 | - | 100 | 36 | 16WF40 | - | - | - | - | - | - | 26.5K | 287G | 39 | 3/4X3(J) | X |
| 1706 | - | 100 | 36 | 16B26 | - | - | - | - | - | - | 283I | 337B | - | - | |
| 1707 | - | 100 | 36 | 16WF40 | - | - | - | - | - | - | 106F | 111I | 46 | 3/4X3 | |
| 1708 | - | 100 | 36 | 16WF40 | - | - | - | - | - | - | 106F | 111I | 39 | 3/4X3 | |
| 1709 | - | 100 | 36 | 16WF45 | - | - | - | - | - | - | 106D | 111L | 39 | 3/4X3 | |
| 1710 | 16X4 BX | 200 | 50 | - | 2-1/2 | 3/8 | 16 | 3/4 | - | - | 247F | 294B | - | - | |
| 1711 | 16X4 BX | 200 | 50 | - | 2-1/2 | 3/8 | 16 | 3/4 | - | - | 247F | 294B | - | - | |
| 1712 | 16X5-1/2BX | 201 | 36 | - | 4 | 3/8 | 16 | 3/4 | - | - | 294D | 247G | - | - | |
| 1713 | - | 100 | 36 | 16WF40 | - | - | - | - | - | - | 335C | 205F | - | - | 1 |
| 1714 | - | 100 | 36 | 16WF40 | - | - | - | - | - | - | 402A | 402A | - | - | |
| 1715 | - | 100 | 36 | 16WF40 | - | - | - | - | - | - | 205F | 220I | - | - | |
| 1716 | - | 100 | 36 | 12WF27 | - | - | - | - | - | - | 26.5K | 26.5K | - | - | |
| 1717 | - | 100 | 36 | 12B19 | - | - | - | - | - | - | 283R | 111K | 18 | 3/4X3 | |
| 1718 | - | 100 | 36 | 12WF27 | - | - | - | - | - | - | 283G | 105L | 19 | 3/4X4-1/2 | |
| 1719 | 32X4 CH | 512 | 36 | - | 4 | 7/8 | 30-1/4 | 5/8 | - | - | 229A | 245B | - | - | |
| 1720 | 12X4 CH | 505 | 50 | 12CH50.0 | 2-7/8 | 3/4 | - | - | 12FT 3 | 1FT 0 | 443A | 441B | - | - | |
| 1721 | - | 100 | 50 | 15CH50 | - | - | - | - | - | - | 245 | 245 | - | - | |
| 1722 | - | 100 | 36 | 15CH33.9 | - | - | - | - | - | - | 315 | 315 | - | - | |
| 1723 | - | 100 | 50 | 15CH33.9 | - | - | - | - | - | - | 315 | 315 | - | - | |
| 1724 | - | 100 | 36 | 15CH33.9 | - | - | - | - | - | - | 26.5K | 26.5K | - | - | |
| 1725 | 15X3-3/8CH | 505 | 46 | 15CH33.9 | 2-3/8 | 1- 7/16 | - | - | - | - | 315 | 233 | - | - | |
| 1726 | - | 100 | 36 | 15CH33.9 | - | - | - | - | - | - | 26.5K | 26.5K | - | - | |
| 1727 | 15X3-3/8CH | 505 | 36 | 15CH33.9 | 2-3/8 | 13/16 | - | - | - | - | 315 | 233 | - | - | |
| 1728 | - | 100 | 36 | 16WF45 | - | - | - | - | - | - | 106 | 111 | 63 | 3/4X3 | |
| 1729 | 16X4 BX | 200 | 50 | - | 2-1/2 | 3/8 | 16 | 3/4 | - | - | 372A | 282C | - | - | |
| 1730 | - | 100 | 36 | 16WF36 | - | - | - | - | - | - | 803A | 806A | 10 | 3/4X3 | |
| 1731 | - | 100 | 36 | 16WF40 | - | - | - | - | - | - | 807A | 806A | 19 | 3/4X3 | |
| 1732 | - | 100 | 36 | 16WF40 | - | - | - | - | - | - | 208F | 806B | 19 | 3/4X3 | |
| 1733 | - | 100 | 36 | 16WF40 | - | - | - | - | - | - | 805A | 208F | 11 | 3/4X3 | |

REMARKS

1 DETAIL 405 LEFT END OF BEAM

LICENSED PROFESSIONAL ENGINEER LESLIE E. ROBERTSON No. 34360 UNIVERSITY OF THE STATE OF N.Y.

**SKILLING-HELLE-CHRISTIANSEN-ROBERTSON** — **Civil & Structural Engineers**

PROJECT: THE WORLD TRADE CENTER | TITLE: BEAM SCHEDULE TOWERS A AND B | DATE: 1/22/68

REVISIONS

| BEAM NO. | SIZE | TYPE | FY | PLATE 1 SHAPE | PLATE 1 WIDTH | PLATE 1 THICK | PLATE 2 WIDTH | PLATE 2 THICK | DIMENSIONS LENGTH | DIMENSIONS DIM. A | SUPPORTS LEFT | SUPPORTS RIGHT | STUDS NO. | STUDS SIZE | REMARKS |
|---|---|---|---|---|---|---|---|---|---|---|---|---|---|---|---|
| 1734 | - | 100 | 36 | 16WF36 | - | - | - | - | - | - | 208F | 807A | (8) | 3/4X3 | |
| 1735 | - | 100 | 36 | 16WF36 | - | - | - | - | - | - | 803A | 26.5K | - | - | |
| 1736 | - | 100 | 36 | 16WF36 | - | - | - | - | - | - | 805A | 807A | - | - | |
| 1737 | - | 100 | 36 | 16WF36 | - | - | - | - | - | - | 803A | 807A | 10 | 3/4X3 | |
| 1738 | - | 100 | 36 | 16WF40 | - | - | - | - | - | - | 106F | 111I | 47 | 3/4X3 | |
| 1739 | - | 100 | 36 | 16WF40 | - | - | - | - | - | - | 106F | 111I | (47) | 3/4X3 | X |
| 1740 | - | 100 | 36 | 14B22 | - | - | - | - | - | - | 201F | 201F | 12 | 3/4X3 | |
| 1741 | - | 100 | 50 | 16WF45 | - | - | - | - | - | - | 106D | 111L | (30) | 3/4X3 | |
| 1742 | - | 100 | 36 | 16WF36 | - | - | - | - | - | - | 26.5K | 374A | (8) | 3/4X4-1/2B | |
| 1743 | - | 100 | 36 | 12B16.5 | - | - | - | - | - | - | 26.5K | 26.5K | 13 | 3/4X3 | |
| 1744 | - | 404 | 36 | 18WF50 | - | - | - | - | - | - | 26.5K | 26.7K | (26) | 3/4X3 | |
| 1745 | - | 100 | 36 | 18I54.7 | - | - | - | - | - | - | 201F | 201G | - | - | |
| 1746 | - | 100 | 36 | 18WF45 | - | - | - | - | - | - | 111M | 111M | (8) | 3/4X3 | |
| 1747 | - | 100 | 36 | 16WF45 | - | - | - | - | - | - | 292A | 287G | 40 | 3/4X3(J) | |
| 1748 | - | 100 | 36 | 14B26 | - | - | - | - | - | - | 201F | 170C | - | - | |
| 1749 | - | 100 | 36 | 16WF40 | - | - | - | - | - | - | 335C | 205F | - | - | 1 |
| 1750 | - | 100 | 36 | 16WF40 | - | - | - | - | - | - | 401A | 401A | - | - | |
| 1751 | - | 100 | 36 | 16WF40 | - | - | - | - | - | - | 205F | 220I | - | - | |
| 1752 | - | 100 | 36 | 16WF40 | - | - | - | - | - | - | 402A | 402A | - | - | |
| 1753 | - | 100 | 36 | 16WF40 | - | - | - | - | - | - | 205F | 220M | - | - | |
| 1754 | 16X4 BX | 300 | 36 | - | 2-1/4 | 3/8 | 16 | 7/8 | - | - | 296C | 274B | - | - | |
| 1755 | - | 100 | 36 | 12B16.5 | - | - | - | - | - | - | 26.5K | 26.5K | - | - | |
| 1756 | - | 100 | 36 | 12B16.5 | - | - | - | - | - | - | 26.5K | 26.5K | - | - | |
| 1757 | - | 100 | 36 | 12B19 | - | - | - | - | - | - | 26.5K | 26.5K | - | - | |
| 1758 | - | 100 | 36 | 14B22 | - | - | - | - | - | - | 201F | 26.5K | 19 | 3/4X3 | |
| 1759 | - | 100 | 36 | 12B19 | - | - | - | - | - | - | 17.4K | 307D | 15 | 3/4X3 | |
| 1760 | - | 100 | 36 | 12B19 | - | - | - | - | - | - | 26.5K | 26.5K | 15 | 3/4X3 | |
| 1761 | - | 100 | 36 | 16WF40 | - | - | - | - | - | - | 335C | 307D | - | - | 1 |
| 1762 | - | 100 | 36 | 16WF40 | - | - | - | - | - | - | 402A | 402A | - | - | |
| 1763 | - | 100 | 36 | 16WF40 | - | - | - | - | - | - | 205F | 220L | 24 | 3/4X3 | |
| 1764 | - | 100 | 36 | 14B26 | - | - | - | - | - | - | 105H | 105H | (8) | 3/4X3 | |
| 1765 | - | 100 | 36 | 8B13 | - | - | - | - | - | - | 17.4K | 17.4K | 11 | 3/4X3 | |
| 1766 | - | 100 | 36 | 8B13 | - | - | - | - | - | - | 17.4K | 17.4K | 11 | 3/4X3 | |

REMARKS

1 DETAIL 405 LEFT END OF BEAM

LICENSED PROFESSIONAL ENGINEER — LESLIE E. ROBERTSON — No. 34360 — UNIVERSITY OF THE STATE OF NEW YORK

**SKILLING-HELLE-CHRISTIANSEN-ROBERTSON** — **Civil & Structural Engineers**

PROJECT: THE WORLD TRADE CENTER | TITLE: BEAM SCHEDULE TOWERS A AND B | DATE: 1/22/68

REVISIONS

| BEAM NO. | SIZE | TYPE | FY | SHAPE | PLATE 1 WIDTH | PLATE 1 THICK | PLATE 2 WIDTH | PLATE 2 THICK | DIMENSIONS LENGTH | DIMENSIONS DIM. A | SUPPORTS LEFT | SUPPORTS RIGHT | STUDS NO. | STUDS SIZE | REMARKS |
|---|---|---|---|---|---|---|---|---|---|---|---|---|---|---|---|
| 1767 | - | 100 | 36 | 8B13 | - | - | - | - | - | - | 105H | 105H | 11 | 3/4X3 | |
| 1768 | - | 100 | 36 | 16WF40 | - | - | - | - | - | - | 106E | 106D | 39 | 3/4X3 | |
| 1769 | - | 100 | 36 | 16WF40 | - | - | - | - | - | - | 106D | 111I | 39 | 3/4X3 | |
| 1770 | 18X4 CH | 507 | 50 | 18CH58.0 | 3- 1/2 | 1/2 | - | - | FULL LENGTH | | 231A | 246E | - | - | |
| 1771 | - | 100 | 50 | 12CH50.0 | - | - | - | - | - | - | 440A | 440A | - | - | |
| 1772 | 15X3-3/8CH | 505 | 50 | 15CH50.0 | 2- 1/2 | 1- 3/8 | - | - | 24FT 0 | 1FT 0 | 246E | 246E | - | - | 1 X |
| 1773 | 15X3-3/8CH | 510 | 50 | 15CH50.0 | 2- 1/2 | 1- 3/8 | - | - | 24FT 0 | 6FT 0 | 246E | 246E | - | - | |
| 1774 | - | 100 | 50 | 12CH50.0 | - | - | - | - | - | - | 440A | 440A | - | - | |
| 1775 | 18X4 CH | 500 | 50 | 18CH58.0 | 3- 1/2 | 1/2 | - | - | FULL LENGTH | | 246E | 231A | - | - | |
| 1776 | 18X4 CH | 507 | 50 | 18CH58.0 | 3- 1/2 | 1/2 | - | - | FULL LENGTH | | 231A | 246E | - | - | |
| 1777 | 15X3-3/8CH | 505 | 50 | 15CH50.0 | 2-1/2 | 1-1/4 | - | - | FULL LENGTH | | 440A | 50.0K | - | - | |
| 1778 | - | 100 | 36 | 8B13 | - | - | - | - | - | - | 201H | 201H | - | - | |
| 1779 | - | 100 | 36 | 14B22 | - | - | - | - | - | - | 201F | 503A | - | - | 2 |
| 1780 | 15X3-3/8CH | 514 | 50 | 15CH50.0 | 2-1/2 | 1-1/4 | - | - | FULL LENGTH | | 50.0K | 440A | - | - | |
| 1781 | 18X4 CH | 507 | 50 | 18CH58.0 | 3- 1/2 | 1/2 | - | - | FULL LENGTH | | 246E | 231A | - | - | |
| 1782 | 21X7 BU | 300 | 36 | - | 7 | 1- 1/4 | 18-1/2 | 1/2 | - | - | 231A | 317C | - | - | |
| 1783 | - | 100 | 36 | 21WF55 | - | - | - | - | - | - | 414A | 430A | - | - | |
| 1784 | - | 100 | 36 | 21WF55 | - | - | - | - | - | - | 317E | 317E | - | - | |
| 1785 | - | 100 | 36 | 21WF55 | - | - | - | - | - | - | 414A | 414A | - | - | |
| 1786 | - | 100 | 36 | 24WF76 | - | - | - | - | - | - | 317C | 231A | - | - | |
| 1787 | 21X7 BU | 300 | 36 | - | 7 | 1- 1/4 | 18-1/2 | 1/2 | - | - | 231A | 317C | - | - | |
| 1788 | - | 100 | 36 | 21WF55 | - | - | - | - | - | - | 414A | 414A | - | - | |
| 1789 | - | 100 | 36 | 21WF55 | - | - | - | - | - | - | 317E | 317E | - | - | |
| 1790 | - | 100 | 36 | 21WF55 | - | - | - | - | - | - | 414A | 414A | - | - | |
| 1791 | - | 100 | 36 | 24WF76 | - | - | - | - | - | - | 317C | 231A | - | - | |
| 1792 | - | 100 | 36 | 16B326 | - | - | - | - | - | - | 105D | 105F | 8 | 3/4X3 | |
| 1793 | - | 100 | 36 | 12B19 | - | - | - | - | - | - | 105F | 26.5K | 21 | 3/4X3 | |
| 1794 | - | 100 | 36 | 14B22 | - | - | - | - | - | - | 26.5K | 26.5K | 20 | 3/4X3 | |
| 1795 | - | 100 | 36 | 12B19 | - | - | - | - | - | - | 26.5K | 26.5K | 10 | 3/4X3 | |
| 1796 | - | 100 | 36 | 12B16.5 | - | - | - | - | - | - | 26.5K | 26.5K | - | - | |
| 1797 | - | 100 | 36 | 16WF36 | - | - | - | - | - | - | 286A | 26.5K | 34 | 3/4X3 | |
| 1798 | 18X4 CH | 502 | 36 | 12B19 | - | - | - | - | - | - | 26.5K | 286A | - | - | |
| 1799 | - | 100 | 36 | 14WF48 | - | - | - | - | - | - | 105K | 26.5K | 20 | 3/4X3 | |

REMARKS

1 DETAIL 442A RIGHT END OF BEAM
2 RIGHT END OF BEAM SITS ON BEAM

LICENSED PROFESSIONAL ENGINEER — LESLIE E. ROBERTSON — No. 34360 — STATE OF NEW YORK

S-BEAM-54

**SKILLING-HELLE-CHRISTIANSEN-ROBERTSON** **Civil & Structural Engineers**

PROJECT: THE WORLD TRADE CENTER | TITLE: BEAM SCHEDULE TOWERS A AND B | DATE: 1/22/68

REVISIONS

| BEAM NO. | SIZE | TYPE | FY | SHAPE | PLATE 1 WIDTH | PLATE 1 THICK | PLATE 2 WIDTH | PLATE 2 THICK | DIMENSIONS LENGTH | DIMENSIONS DIM. A | SUPPORTS LEFT | SUPPORTS RIGHT | STUDS NO. | STUDS SIZE | REMARKS |
|---|---|---|---|---|---|---|---|---|---|---|---|---|---|---|---|
| 1800 | 18X4 CH | 507 | 50 | 18CH58.0 | - | - | - | - | - | - | 229B | 245B | - | - | 1 |
| 1801 | 12X4 CH | 505 | 50 | 12CH50.0 | 2-3/4 | 7/8 | - | - | 12FT 3 | 1FT 0 | 440A | 441B | - | - | |
| 1802 | 15X3-3/8CH | 505 | 50 | 15CH40.0 | 2-1/4 | 3/4 | - | - | 26FT 1 | 1FT 0 | 245C | 245D | - | - | 2 |
| 1803 | 15X3-3/8CH | 503 | 50 | 15CH40.0 | 2-1/4 | 3/4 | - | - | 26FT 0 | 1FT 0 | 245D | 245C | - | - | 3 |
| 1804 | 12X4 CH | 505 | 36 | 12CH50.0 | 2-3/4 | 7/8 | - | - | 12FT 4 | 1FT 0 | 441B | 440A | - | - | |
| 1805 | 18X4 CH | 500 | 50 | 18CH58.0 | - | - | - | - | - | - | 245B | 229B | - | - | X |
| 1806 | 12X4 CH | 505 | 50 | 12CH50.0 | 2-7/8 | 1/2 | - | - | FULL LENGTH | | 229B | 311A | - | - | |
| 1807 | - | 100 | 50 | 12CH50.0 | - | - | - | - | - | - | 428A | 426A | - | - | |
| 1808 | - | 100 | 36 | 15CH40.0 | - | - | - | - | - | - | 315A | 315D | - | - | |
| 1809 | - | 100 | 36 | 15CH40.0 | - | - | - | - | - | - | 422A | 423A | - | - | |
| 1810 | - | 100 | 36 | 15CH50.0 | - | - | - | - | - | - | 315A | 233A | - | - | |
| 1811 | - | 100 | 36 | 12B22 | - | - | - | - | - | - | 310D | 26.5K | - | - | |
| 1812 | - | 100 | 36 | 16B31 | - | - | - | - | - | - | 220G | 254B | - | - | |
| 1813 | - | 100 | 36 | 16B31 | - | - | - | - | - | - | 254B | 254B | - | - | |
| 1814 | - | 100 | 36 | 16B31 | - | - | - | - | - | - | 254B | 335A | - | - | 8 |
| 1815 | - | 100 | 36 | 16B31 | - | - | - | - | - | - | 335A | 254B | - | - | 9 |
| 1816 | - | 100 | 36 | 16B31 | - | - | - | - | - | - | 254B | 254 B | - | - | |
| 1817 | - | 100 | 36 | 16B31 | - | - | - | - | - | - | 254B | 220G | - | - | |
| 1818 | - | 100 | 36 | 16B31 | - | - | - | - | - | - | 220G | 254A | - | - | |
| 1819 | - | 100 | 36 | 16B31 | - | - | - | - | - | - | 254A | 254A | - | - | |
| 1820 | - | 100 | 36 | 16B31 | - | - | - | - | - | - | 254A | 335A | - | - | 4 |
| 1821 | - | 100 | 36 | 16B31 | - | - | - | - | - | - | 335A | 254A | - | - | 5 |
| 1822 | - | 100 | 36 | 16B31 | - | - | - | - | - | - | 254A | 254A | - | - | |
| 1823 | - | 100 | 36 | 16B31 | - | - | - | - | - | - | 254A | 220G | - | - | |
| 1824 | - | 100 | 50 | 16WF50 | - | - | - | - | - | - | 220H | 205D | - | - | |
| 1825 | - | 100 | 36 | 16WF45 | - | - | - | - | - | - | 401B | 401B | - | - | |
| 1826 | - | 100 | 36 | 16WF50 | - | - | - | - | - | - | 205D | 335A | - | - | 4 |
| 1827 | - | 100 | 36 | 16WF50 | - | - | - | - | - | - | 335A | 205D | - | - | 5 |
| 1828 | - | 100 | 36 | 16WF45 | - | - | - | - | - | - | 401B | 401B | - | - | |
| 1829 | - | 100 | 50 | 16WF50 | - | - | - | - | - | - | 205D | 220H | - | - | |
| 1830 | - | 100 | 36 | 16WF45 | - | - | - | - | - | - | 220F | 205D | - | - | |
| 1831 | - | 100 | 36 | 16WF40 | - | - | - | - | - | - | 401B | 401B | - | - | |
| 1832 | - | 100 | 36 | 16WF45 | - | - | - | - | - | - | 205D | 310C | - | - | 6 |
| 1833 | - | 100 | 36 | 16WF45 | - | - | - | - | - | - | 307D | 310C | - | - | 7 |

REMARKS

1 REINF. PLATES 3FT 9 X 1
2 DETAIL 442 RIGHT END OF BEAM
3 DETAIL 442 LEFT END OF BEAM
4 DETAIL 474 RIGHT END OF BEAM
5 DETAIL 474 LEFT END OF BEAM
6 DETAIL 405 RIGHT END OF BEAM
7 DETAIL 405 LEFT END OF BEAM
8 DETAIL [illegible] RIGHT END OF BEAM
9 DETAIL [illegible] LEFT END OF BEAM

LICENSED PROFESSIONAL ENGINEER LESLIE E. ROBERTSON No. 34560 UNIVERSITY OF THE STATE OF NEW YORK

**SKILLING, HELLE, CHRISTIANSEN, ROBERTSON** — Structural & Civil Engineers

PROJECT: THE WORLD TRADE CENTER | TITLE: BEAM SCHEDULE TOWERS A AND B | DATE: 7/7/68

REVISIONS

| BEAM NO. | SIZE | TYPE | FY | SHAPE | PLATE 1 WIDTH | PLATE 1 THICK | PLATE 2 WIDTH | PLATE 2 THICK | DIMENSIONS LENGTH | DIMENSIONS DIM. A | SUPPORTS LEFT | SUPPORTS RIGHT | STUDS NO. | STUDS SIZE | REMARKS |
|---|---|---|---|---|---|---|---|---|---|---|---|---|---|---|---|
| 1834 | - | 100 | 36 | 16WF40 | - | - | - | - | - | - | 401B | 401B | - | - | |
| 1835 | - | 100 | 36 | 16WF45 | - | - | - | - | - | - | 205D | 220H | - | - | |
| 1836 | - | 100 | 36 | 24I79.9 | - | - | - | - | - | - | 202B | 234A | - | - | |
| 1837 | - | 100 | 36 | 24I79.9 | - | - | - | - | - | - | 234A | 234A | 44 | 3/4X3 | |
| 1838 | - | 100 | 36 | 24I79.9 | - | - | - | - | - | - | 234A | 234A | - | - | |
| 1839 | - | 100 | 36 | 24I79.9 | - | - | - | - | - | - | 234A | 202B | - | - | X |
| 1840 | - | 100 | 36 | 24I79.9 | - | - | - | - | - | - | 202B | 234A | 34 | 3/4X3 | |
| 1841 | - | 100 | 36 | 24I90.0 | - | - | - | - | - | - | 234A | 234C | 42 | 3/4X3 | 3 |
| 1842 | - | 100 | 36 | 24I90.0 | - | - | - | - | - | - | 234C | 234A | 42 | 3/4X3 | 3 |
| 1843 | - | 100 | 36 | 24I79.9 | - | - | - | - | - | - | 234A | 202B | 34 | 3/4X3 | |
| 1844 | - | 100 | 36 | 18WF50 | - | - | - | - | - | - | 220H | 205A | - | - | |
| 1845 | - | 100 | 36 | 18WF45 | - | - | - | - | - | - | 414A | 414A | - | - | |
| 1846 | - | 100 | 36 | 18WF50 | - | - | - | - | - | - | 205A | 205A | - | - | 1 |
| 1847 | - | 100 | 36 | 18WF50 | - | - | - | - | - | - | 205A | 205A | - | - | 2 |
| 1848 | - | 100 | 36 | 18WF45 | - | - | - | - | - | - | 414A | 414A | - | - | |
| 1849 | - | 100 | 36 | 18WF50 | - | - | - | - | - | - | 205A | 220H | - | - | |
| 1850 | - | 100 | 36 | 24I79.9 | - | - | - | - | - | - | 234A | 234A | - | - | |
| 1851 | - | 100 | 36 | 24I79.9 | - | - | - | - | - | - | 234C | 234C | 22 | 3/4X3 | 3 |
| 1852 | - | 100 | 36 | 12B16.5 | - | - | - | - | - | - | 175A | 26.5K | 15 | 3/4X3 | |
| 1853 | - | 100 | 36 | 12B16.5 | - | - | - | - | - | - | 26.5K | 26.5K | 15 | 3/4X3 | |
| 1854 | - | 100 | 36 | 12B16.5 | - | - | - | - | - | - | 26.5K | 26.5K | 10 | 3/4X3B | |
| 1855 | - | 100 | 36 | 16WF36 | - | - | - | - | - | - | 810B | 26.5K | 20 | 3/4X3 | |
| 1856 | 16X5-1/2BX | 200 | 36 | - | 4 | 3/8 | 16 | 3/4 | - | - | 450 | 450 | - | - | |
| 1857 | 16X5-1/2BX | 200 | 36 | - | 4 | 3/8 | 16 | 3/4 | - | - | 206A | 375A | - | - | |
| 1858 | - | 100 | 50 | 18W45 | - | - | - | - | - | - | 235B | 377B | 15 | 3/4X3 | |
| 1859 | - | 100 | 50 | 18WF45 | - | - | - | - | - | - | 377B | 235B | 15 | 3/4X3 | |
| 1860 | 16X5-1/2BX | 200 | 36 | - | 4 | 3/8 | 16 | 3/4 | - | - | 450 | 450 | - | - | |
| 1861 | 16X5-1/2BX | 200 | 36 | - | 4 | 3/8 | 16 | 3/4 | - | - | 375A | 206A | - | - | |
| 1862 | - | 100 | 36 | 14B22 | - | - | - | - | - | - | 26.5K | 26.5K | - | - | |
| 1863 | - | 100 | 50 | 18WF45 | - | - | - | - | - | - | 800B | 26.5K | 24 | 3/4X3 | |
| 1864 | - | 100 | 50 | 12B19 | - | - | - | - | - | - | 111H | 17.4K | - | - | |
| 1865 | - | 100 | 50 | 18WF45 | - | - | - | - | - | - | 801B | 804B | 24 | 3/4X3 | |
| 1866 | - | 100 | 50 | 14B26 | - | - | - | - | - | - | 283I | 26.5K | - | - | |

REMARKS

1 DETAIL 414A RIGHT END OF BEAM
2 DETAIL 414A LEFT END OF BEAM
3 DETAIL 234C, REVISION AFTER FABRICATION, SEE 19-A-907.

LICENSED PROFESSIONAL ENGINEER — LESLIE E. ROBERTSON — No. 54360 — UNIVERSITY OF THE STATE OF NEW YORK

**SKILLING-HELLE-CHRISTIANSEN-ROBERTSON** — **Civil & Structural Engineers**

PROJECT: THE WORLD TRADE CENTER | TITLE: BEAM SCHEDULE TOWERS A AND B | DATE: 7/17/68

REVISIONS

| BEAM NO. | SIZE | TYPE | FY | PLATE 1 SHAPE | PLATE 1 WIDTH | PLATE 1 THICK | PLATE 2 WIDTH | PLATE 2 THICK | DIMENSIONS LENGTH | DIMENSIONS DIM. A | SUPPORTS LEFT | SUPPORTS RIGHT | STUDS NO. | STUDS SIZE | REMARKS |
|---|---|---|---|---|---|---|---|---|---|---|---|---|---|---|---|
| 1867 | - | 100 | 50 | 18WF45 | - | - | - | - | - | - | 208G | 335F | 24 | 3/4X3 | |
| 1868 | - | 100 | 50 | 18WF45 | - | - | - | - | - | - | 807B | 806C | 24 | 3/4X3 | |
| 1869 | - | 100 | 36 | 9CH13.4 | - | - | - | - | - | - | 17.4K | 17.4K | - | - | |
| 1870 | - | 100 | 50 | 18WF45 | - | - | - | - | - | - | 801B | 804B | 24 | 3/4X3 | |
| 1871 | - | 100 | 50 | 12B19 | - | - | - | - | - | - | 111H | 17.4K | - | - | |
| 1872 | - | 100 | 50 | 18WF45 | - | - | - | - | - | - | 800B | 26.5K | 26 | 3/4X3 | |
| 1873 | - | 100 | 50 | 14B26 | - | - | - | - | - | - | 283I | 170C | 18 | 3/4X3 | |
| 1874 | - | 100 | 50 | 18WF45 | - | - | - | - | - | - | 800B | 801B | 8 | 3/4X3 | |
| 1875 | - | 100 | 50 | 18WF45 | - | - | - | - | - | - | 800B | 801B | 8 | 3/4X3 | |
| 1876 | 18X4 BU | 300 | 36 | - | 4 | 1 | 16 | 3/8 | - | - | 372A | 282D | - | - | |
| 1877 | - | 100 | 50 | 18WF45 | - | - | - | - | - | - | 805B | 208G | 8 | 3/4X3 | |
| 1878 | - | 100 | 50 | 12WF27 | - | - | - | - | - | - | 111H | 111H | 8 | 3/4X3 | |
| 1879 | - | 100 | 50 | 18WF45 | - | - | - | - | - | - | 283L | 337C | 8 | 3/4X3 | |
| 1880 | - | 100 | 50 | 18WF45 | - | - | - | - | - | - | 802B | 800B | 8 | 3/4X3 | |
| 1881 | 18X4 BX | 200 | 36 | - | 2-1/2 | 3/8 | 18 | 3/4 | - | - | 247F | 294C | - | - | |
| 1882 | 18X4 BX | 200 | 36 | - | 2-1/2 | 3/8 | 18 | 3/4 | - | - | 247F | 294C | - | - | |
| 1883 | - | 100 | 50 | 18WF45 | - | - | - | - | - | - | 802B | 800B | 8 | 3/4X3 | |
| 1884 | - | 100 | 50 | 18WF45 | - | - | - | - | - | - | 804D | 800B | - | - | |
| 1885 | - | 100 | 50 | 18WF60 | - | - | - | - | - | - | 884A | 287H | 25 | 3/4X3 | |
| 1886 | - | 100 | 36 | 14B22 | - | - | - | - | - | - | 310J | 26.5K | 22 | 3/4X3 | |
| 1887 | - | 100 | 50 | 18WF60 | - | - | - | - | - | - | 287H | 287H | 25 | 3/4X3 | |
| 1888 | - | 100 | 50 | 18WF45 | - | - | - | - | - | - | 26.5K | 287H | 15 | 3/4X3B | |
| 1889 | - | 100 | 50 | 18WF60 | - | - | - | - | - | - | 287H | 287H | 25 | 3/4X3 | |
| 1890 | - | 100 | 50 | 18WF45 | - | - | - | - | - | - | 208G | 807B | 8 | 3/4X3 | |
| 1891 | - | 100 | 50 | 18WF45 | - | - | - | - | - | - | 170E | 287H | 15 | 3/4X3B | |
| 1892 | 33X5-1/2BU | 321 | 36 | - | 5-1/2 | 1 | 31 | 1/2 | - | - | 335M | 254D | - | - | 1,2,3 |
| 1893 | - | 100 | 50 | 18WF50 | - | - | - | - | - | - | 287H | 287H | 8 | 3/4X3 | |
| 1894 | - | 100 | 50 | 8B13 | - | - | - | - | - | - | 111K | 111K | 15 | 3/4X3 | |
| 1895 | - | 100 | 50 | 18WF45 | - | - | - | - | - | - | 307G | 287H | 15 | 3/4X3B | |
| 1896 | - | 100 | 36 | 18WF60 | - | - | - | - | - | - | 26.5K | 26.5K | 18 | 3/4X3 | |
| 1897 | - | 100 | 50 | 18WF45 | - | - | - | - | - | - | 804D | 800B | - | - | |
| 1898 | - | 100 | 50 | 18WF60 | - | - | - | - | - | - | 287H | 287H | 25 | 3/4X3 | |
| 1899 | - | 100 | 50 | 18WF60 | - | - | - | - | - | - | 287H | 884A | 25 | 3/4X3 | |

REMARKS

1 DETAIL 406 LEFT END OF BEAM.
2 PLATE 3, 4-1/2 WIDTH, 7/8 THICK, BEAM TYPE 321, REVISED AFTER FABRICATION. TOWER A ONLY.
3 END SUPPORTS, REVISED AFTER FABRICATION. TOWER A ONLY.

LICENSED PROFESSIONAL ENGINEER — LESLIE E. ROBERTSON — No. 34360 — UNIVERSITY OF THE STATE OF NEW YORK

5-AB1- 57

**SKILLING-HELLE-CHRISTIANSEN-ROBERTSON** — Civil & Structural Engineers

PROJECT: THE WORLD TRADE CENTER | TITLE: BEAM SCHEDULE TOWERS A AND B | DATE: 3/13/68

REVISIONS

| BEAM NO. | SIZE | TYPE | FY | SHAPE | PLATE 1 WIDTH | PLATE 1 THICK | PLATE 2 WIDTH | PLATE 2 THICK | DIMENSIONS LENGTH | DIMENSIONS DIM. A | SUPPORTS LEFT | SUPPORTS RIGHT | STUDS NO. | STUDS SIZE | REMARKS |
|---|---|---|---|---|---|---|---|---|---|---|---|---|---|---|---|
| 1900 | - | 100 | 50 | 18WF45 | - | - | - | - | - | - | 26.5K | 287H | 15 | 3/4X3B | |
| 1901 | - | 100 | 50 | 18WF45 | - | - | - | - | - | - | 26.5K | 287H | 12 | 3/4X3B | |
| 1902 | - | 100 | 36 | 12B16.5 | - | - | - | - | - | - | 17.4K | 17.4K | - | - | |
| 1903 | - | 100 | 36 | 12B16.5 | - | - | - | - | - | - | 175A | 17.4K | 13 | 3/4X3 | |
| 1904 | - | 404 | 50 | 18WF60 | - | - | - | - | - | - | 338F | 294C | 26 | 3/4X3 | |
| 1905 | - | 404 | 50 | 18WF60 | - | - | - | - | - | - | 294C | 282D | 26 | 3/4X3 | |
| 1906 | - | 100 | 36 | 8B13 | - | - | - | - | - | - | 111K | 111K | - | - | |
| 1907 | - | 404 | 50 | 18WF60 | - | - | - | - | - | - | 338C | 294C | 26 | 3/4X3 | |
| 1908 | - | 404 | 50 | 18WF60 | - | - | - | - | - | - | 294C | 338F | 26 | 3/4X3 | |
| 1909 | 18X8 BU | 300 | 50 | - | 8 | 1- 1/8 | 15-3/4 | 5/8 | - | - | 815B | 378B | - | - | |
| 1910 | 18X8 BU | 300 | 50 | - | 8 | 1- 3/8 | 15-1/4 | 5/8 | - | - | 378B | 815B | - | - | |
| 1911 | 18X8 BU | 300 | 50 | - | 8 | 1- 1/2 | 15 | 5/8 | - | - | 815B | 378B | - | - | |
| 1912 | 18X8 BX | 220 | 50 | - | 7-1/4 | 1- 1/8 | 18 | 3/8 | - | - | 380B | 818A | - | - | |
| 1913 | 18X8 BU | 300 | 50 | - | 8 | 1- 3/8 | 15-1/4 | 5/8 | - | - | 815B | 378B | - | - | |
| 1914 | 18X8 BU | 300 | 50 | - | 8 | 1- 1/8 | 15-3/4 | 5/8 | - | - | 378B | 815B | - | - | |
| 1915 | 18X8 BU | 300 | 50 | - | 8 | 1- 1/8 | 15-3/4 | 5/8 | - | - | 815B | 378B | - | - | |
| 1916 | 18X8 BU | 300 | 50 | - | 8 | 1- 3/8 | 15-1/4 | 5/8 | - | - | 378B | 815B | - | - | |
| 1917 | 18X8 BX | 220 | 50 | - | 7-1/4 | 1- 1/8 | 18 | 3/8 | - | - | 818A | 380B | - | - | |
| 1918 | 18X8 BU | 300 | 50 | - | 8 | 1- 1/2 | 15 | 5/8 | - | - | 378B | 815B | - | - | |
| 1919 | 18X8 BU | 300 | 50 | - | 8 | 1- 3/8 | 15-1/4 | 5/8 | - | - | 815B | 378B | - | - | |
| 1920 | 18X8 BU | 300 | 50 | - | 8 | 1- 1/8 | 15-3/4 | 5/8 | - | - | 378B | 815B | - | - | |
| 1921 | 18X7 BU | 300 | 50 | - | 7 | 1 | 16 | 1/2 | - | - | 885A | 205H | - | - | |
| 1922 | 18X7 BU | 300 | 50 | - | 7 | 1 | 16 | 1/2 | - | - | 408A | 408A | - | - | |
| 1923 | 18X7 BU | 300 | 50 | - | 7 | 1 | 16 | 1/2 | - | - | 811C | 335F | - | - | 1 |
| 1924 | 18X7 BU | 300 | 50 | - | 7 | 1 | 16 | 1/2 | - | - | 205H | 811C | - | - | 2 |
| 1925 | 18X7 BU | 300 | 50 | - | 7 | 1 | 16 | 1/2 | - | - | 408A | 408A | - | - | |
| 1926 | 18X7 BU | 300 | 50 | - | 7 | 1 | 16 | 1/2 | - | - | 205H | 881A | - | - | |
| 1927 | - | 100 | 50 | 18WF60 | - | - | - | - | - | - | 885A | 205H | - | - | |
| 1928 | - | 100 | 50 | 18WF60 | - | - | - | - | - | - | 414B | 414B | - | - | |
| 1929 | - | 100 | 50 | 18WF60 | - | - | - | - | - | - | - | 335F | - | - | 3,6 |
| 1930 | - | 100 | 50 | 18WF60 | - | - | - | - | - | - | 307G | - | - | - | 4,5 |
| 1931 | - | 100 | 50 | 18WF60 | - | - | - | - | - | - | 414B | 414B | - | - | |
| 1932 | - | 100 | 50 | 18WF60 | - | - | - | - | - | - | 205H | 885A | - | - | |

REMARKS

1. DETAIL 408A RIGHT END OF BEAM
2. DETAIL 408A LEFT END OF BEAM
3. DETAIL 414B RIGHT END OF BEAM
4. DETAIL 414B LEFT END OF BEAM
5. SEE 6-AB5-4 FOR RIGHT CONN. DET.
6. SEE 6-AB5-4 FOR LEFT CONN. DET.

LICENSED PROFESSIONAL ENGINEER LESLIE E. ROBERTSON No. 34360 UNIVERSITY OF THE STATE OF N.

5-AB1- 58

**SKILLING-HELLE-CHRISTIANSEN-ROBERTSON** — **Civil & Structural Engineers**

PROJECT: THE WORLD TRADE CENTER | TITLE: BEAM SCHEDULE TOWERS A AND B | DATE: 07/11/69

REVISIONS

| BEAM NO. | SIZE | TYPE | FY | SHAPE | PLATE 1 WIDTH | PLATE 1 THICK | PLATE 2 WIDTH | PLATE 2 THICK | DIMENSIONS LENGTH | DIMENSIONS DIM. A | SUPPORTS LEFT | SUPPORTS RIGHT | STUDS NO. | STUDS SIZE | REMARKS |
|---|---|---|---|---|---|---|---|---|---|---|---|---|---|---|---|
| 1934 | - | 100 | 50 | 18WF45 | - | - | - | - | - | - | 801B | 802B | 10 | 3/4X3 | |
| 1935 | 16X5 1/2BX | 200 | 36 | - | 4 | 3/8 | 16 | 3/4 | - | - | 375A | 247G | - | - | |
| 1936 | - | 100 | 36 | 8B13 | - | - | - | - | - | - | 17.4K | 17.4K | - | - | |
| 1937 | - | 100 | 50 | 8B13 | - | - | - | - | - | - | 111K | 111K | - | - | |
| 1938 | - | 100 | 50 | 18WF45 | - | - | - | - | - | - | 377B | 235B | 15 | 3/4X3 | |
| 1939 | - | 100 | 36 | 12B16.5 | - | - | - | - | - | - | 26.5K | 26.5K | - | - | X |
| 1940 | - | 100 | 36 | 16WF36 | - | - | - | - | - | - | 106E | 275B | 8 | 3/4X3C | |
| 1941 | - | 100 | 50 | 16WF50 | - | - | - | - | - | - | 802A | 800A | 8 | 3/4X3 | |
| 1942 | - | 100 | 50 | 16WF78 | - | - | - | - | - | - | 800A | 26.5K | 19 | 3/4X3 | |
| 1943 | - | 100 | 36 | 14B22 | - | - | - | - | - | - | 26.5K | 26.5K | 19 | 3/4X3 | |
| 1944 | - | 100 | 36 | 12B19 | - | - | - | - | - | - | 111H | 26.5K | - | - | |
| 1945 | - | 100 | 50 | 16WF50 | - | - | - | - | - | - | 801A | 804A | 19 | 3/4X3 | |
| 1946 | - | 100 | 50 | 16B26 | - | - | - | - | - | - | 26.5K | 803B | - | - | |
| 1947 | - | 100 | 50 | 16WF40 | - | - | - | - | - | - | 804A | 803B | 10 | 3/4X3 | |
| 1948 | - | 100 | 50 | 16WF40 | - | - | - | - | - | - | 801A | 803B | 10 | 3/4X3 | |
| 1949 | - | 100 | 50 | 16WF78 | - | - | - | - | - | - | 800A | 26.5K | 19 | 3/4X3 | |
| 1950 | - | 100 | 50 | 16WF50 | - | - | - | - | - | - | 801A | 804A | 19 | 3/4X3 | |
| 1951 | - | 100 | 50 | 16WF40 | - | - | - | - | - | - | 803B | 804A | 10 | 3/4X3 | |
| 1952 | - | 100 | 50 | 16B26 | - | - | - | - | - | - | 803B | 26.5K | - | - | |
| 1953 | - | 100 | 50 | 16WF40 | - | - | - | - | - | - | 803B | 801A | 10 | 3/4X3 | |
| 1954 | - | 100 | 50 | 16B26 | - | - | - | - | - | - | 802A | 801A | 10 | 3/4X3 | |
| 1955 | - | 100 | 50 | 16WF78 | - | - | - | - | - | - | 804C | 800A | 18 | 3/4X3 | |
| 1956 | - | 100 | 50 | 16WF50 | - | - | - | - | - | - | 800A | 801A | 8 | 3/4X3 | |
| 1957 | - | 100 | 50 | 16WF50 | - | - | - | - | - | - | 802A | 804C | 15 | 3/4X3 | |
| 1958 | - | 100 | 50 | 16WF36 | - | - | - | - | - | - | 26.5K | 802A | 15 | 3/4X3 | |
| 1959 | - | 100 | 50 | 16WF78 | - | - | - | - | - | - | 804C | 800A | 12 | 3/4X3 | |
| 1960 | - | 100 | 50 | 16WF36 | - | - | - | - | - | - | 26.5K | 802A | 15 | 3/4X3 | |
| 1961 | - | 100 | 50 | 16WF50 | - | - | - | - | - | - | 804C | 802A | 18 | 3/4X3 | |
| 1962 | - | 100 | 50 | 16B26 | - | - | - | - | - | - | 801A | 802A | 10 | 3/4X3 | |
| 1963 | - | 100 | 36 | 12B16.5 | - | - | - | - | - | - | 26.5K | 26.5K | 18 | 3/4X3 | |
| 1964 | - | 404 | 50 | 16WF50 | - | - | - | - | - | - | 382A | 294B | 15 | 3/4X3 | |
| 1965 | - | 404 | 50 | 16WF50 | - | - | - | - | - | - | 294B | 282C | 15 | 3/4X3 | |
| 1966 | - | 404 | 50 | 16WF50 | - | - | - | - | - | - | 337B | 294B | 15 | 3/4X3 | |

LICENSED PROFESSIONAL ENGINEER — LESLIE E. ROBERTSON — No. 34360 — UNIVERSITY OF THE STATE OF NEW YORK

**SKILLING-HELLE-CHRISTIANSEN-ROBERTSON** — **Civil & Structural Engineers**

PROJECT: THE WORLD TRADE CENTER | TITLE: BEAM SCHEDULE TOWERS A AND B | DATE: 7/7/68

REVISIONS

| BEAM NO. | SIZE | TYPE | FY | SHAPE | PLATE 1 WIDTH | PLATE 1 THICK | PLATE 2 WIDTH | PLATE 2 THICK | DIMENSIONS LENGTH | DIMENSIONS DIM. A | SUPPORTS LEFT | SUPPORTS RIGHT | STUDS NO. | STUDS SIZE | REMARKS |
|---|---|---|---|---|---|---|---|---|---|---|---|---|---|---|---|
| 1967 | - | 404 | 50 | 16WF50 | - | - | - | - | - | - | 294B | 382A | 15 | 3/4X3 | (1) |
| 1968 | - | 100 | 50 | 16WF50 | - | - | - | - | - | - | 382C | 287G | 39 | 3/4X3 | |
| 1969 | - | 100 | 50 | 16WF50 | - | - | - | - | - | - | 287G | 287G | 39 | 3/4X3 | |
| 1970 | - | 100 | 36 | 16WF50 | - | - | - | - | - | - | 287G | 287G | 39 | 3/4X3 | |
| 1971 | - | 100 | 36 | 16WF50 | - | - | - | - | - | - | 287G | 287G | 8 | 3/4X3 | |
| 1972 | - | 100 | 50 | 16WF50 | - | - | - | - | - | - | 287G | 287G | 39 | 3/4X3 | X |
| 1973 | - | 100 | 50 | 16WF50 | - | - | - | - | - | - | 287G | 382C | 39 | 3/4X3 | |
| 1974 | - | 100 | 50 | 16WF36 | - | - | - | - | - | - | 26.5K | 287G | 15 | 3/4X3B | |
| 1975 | - | 100 | 50 | 16WF36 | - | - | - | - | - | - | 170B | 287G | 15 | 3/4X3 | |
| 1976 | - | 100 | 50 | 16WF40 | - | - | - | - | - | - | 307F | 287G | 19 | 3/4X3 | |
| 1977 | - | 100 | 50 | 16WF36 | - | - | - | - | - | - | 26.5K | 287G | 12 | 3/4X3B | |
| 1978 | - | 100 | 50 | 16WF36 | - | - | - | - | - | - | 26.5K | 287G | 12 | 3/4X3B | |
| 1979 | - | 100 | 50 | 16WF50 | - | - | - | - | - | - | (800A) | (801A) | 8 | 3/4X3 | |
| 1980 | - | 100 | 50 | 16WF50 | - | - | - | - | - | - | 802A | 800A | 8 | 3/4X3 | |
| 1981 | 16X8 BU | 300 | 36 | - | 8 | 1- 1/4 | 13-1/2 | 9/16 | - | - | 378A | 814A | - | - | |
| 1982 | 16X8 BX | 220 | 36 | - | 7-1/4 | 1- 1/4 | 16 | 3/8 | - | - | 817A | 379A | - | - | |
| 1983 | - | 100 | 36 | 8B13 | - | - | - | - | - | - | 17.4K | 17.4K | 11 | 3/4X3 | |
| 1984 | - | 100 | 36 | 16WF40 | - | - | - | - | - | - | 111A | 111A | - | - | |
| 1985 | 16X8 BU | 300 | 36 | - | 8 | 3/4 | 14-1/2 | 1/2 | - | - | 378A | 814A | - | - | |
| 1986 | 16X8 BU | 300 | 36 | - | 8 | 1- 1/8 | 13-3/4 | 1/2 | - | - | 814A | 378A | - | - | |
| 1987 | 16X8 BX | 220 | 36 | - | 7-1/4 | 1- 1/4 | 16 | 3/8 | - | - | 379A | 817A | - | - | |
| 1988 | 16X8 BU | 300 | 36 | - | 8 | 1- 1/4 | 13-1/2 | 9/16 | - | - | 814A | 378A | - | - | |
| 1989 | 16X8 BU | 300 | 36 | - | 8 | 1- 1/8 | 13-3/4 | 1/2 | - | - | 378A | 814A | - | - | |
| 1990 | 16X8 BU | 300 | 36 | - | 8 | 3/4 | 14-1/2 | 1/2 | - | - | 814A | 378A | - | - | |
| 1991 | - | 100 | 50 | 16WF40 | - | - | - | - | - | - | 335E | 805A | 19 | 3/4X3 | |
| 1992 | - | 100 | 36 | 16WF40 | - | - | - | - | - | - | 26.5K | 26.5K | - | - | |
| 1993 | - | 100 | 36 | 16WF50 | - | - | - | - | - | - | 29.0K | 27.3K | - | - | |
| 1994 | - | 100 | 36 | 16WF50 | - | - | - | - | - | - | 28.8K | 29.1K | - | - | |
| 1995 | - | 100 | 36 | 8B13 | - | - | - | - | - | - | 17.4K | 17.4K | 11 | 3/4X3 | |
| 1996 | - | 100 | 36 | 12B16.5 | - | - | - | - | - | - | 17.4K | 346A | 8 | 3/4X3 | |
| 1997 | - | 100 | 36 | 8B13 | - | - | - | - | - | - | 17.4K | 17.4K | - | - | |
| 1998 | - | 100 | 36 | 12B19 | - | - | - | - | - | - | 26.5K | 26.5K | - | - | |
| 1999 | - | 100 | 36 | 10B15 | - | - | - | - | - | - | 179B | 17.4K | - | - | |

REMARKS

1 DETAIL 382D, RIGHT SUPPORT, TOWER B ONLY

* HOLD

LICENSED PROFESSIONAL ENGINEER — LESLIE E. ROBERTSON — No. 54360 — UNIVERSITY OF THE STATE OF NEW YORK

5-AB1- 60

**SKILLING, HELLE, CHRISTIANSEN, ROBERTSON** — Structural & Civil Engineers

PROJECT: THE WORLD TRADE CENTER | TITLE: BEAM SCHEDULE TOWERS A AND B | DATE: 8/15/69

REVISIONS

| BEAM NO. | SIZE | TYPE | FY | SHAPE | PLATE 1 WIDTH | PLATE 1 THICK | PLATE 2 WIDTH | PLATE 2 THICK | DIMENSIONS LENGTH | DIMENSIONS DIM. A | SUPPORTS LEFT | SUPPORTS RIGHT | STUDS NO. | STUDS SIZE | REMARKS |
|---|---|---|---|---|---|---|---|---|---|---|---|---|---|---|---|
| 2000 | - | 100 | 36 | 16WF40 | - | - | - | - | - | - | 26.5K | 26.5K | - | - | |
| 2001 | - | 100 | 36 | 8CH11.5 | - | - | - | - | - | - | 17.4K | 17.4K | - | - | |
| 2002 | - | 100 | 36 | 8CH11.5 | - | - | - | - | - | - | 17.4K | 17.4K | - | - | |
| 2003 | - | 100 | 36 | 12816.5 | - | - | - | - | - | - | 26.5K | 26.5K | - | - | |
| 2004 | - | 100 | 36 | 12816.5 | - | - | - | - | - | - | 26.5K | 26.5K | - | - | |
| 2005 | - | 100 | 36 | 12816.5 | - | - | - | - | - | - | 105L | 201Q | 15 | 3/4X4-1/2 | 1 X |
| 2006 | - | 100 | 36 | 12816.5 | - | - | - | - | - | - | 26.5K | 26.5K | - | - | |
| 2007 | - | 100 | 36 | 16WF40 | - | - | - | - | - | - | 241A | 26.5K | 39 | 3/4X3 | |
| 2008 | 20X6 BU | 300 | 36 | - | 6 | 3/4 | 18-1/2 | 3/8 | - | - | 201R | 179B | 8 | 3/4X3C | |
| 2009 | - | 100 | 36 | 12B19 | - | - | - | - | - | - | 26.5K | 26.5K | 15 | 3/4X3 | |
| 2010 | - | 100 | 36 | 14B22 | - | - | - | - | - | - | 26.5K | 26.5K | - | - | |
| 2011 | - | 100 | 36 | 12WF31 | - | - | - | - | - | - | 105L | 201Q | 12 | 3/4X3 | |
| 2012 | - | 100 | 36 | 14B22 | - | - | - | - | - | - | 342A | 224A | 12 | 3/4X4-1/2 | |
| 2013 | - | 100 | 36 | 12816.5 | - | - | - | - | - | - | 26.5K | 26.5K | - | - | |
| 2014 | - | 100 | 36 | 12816.5 | - | - | - | - | - | - | 26.5K | 105L | 15 | 3/4X4-1/2B | |
| 2015 | - | 100 | 36 | 12816.5 | - | - | - | - | - | - | 26.5K | 26.5K | - | - | |
| 2016 | - | 100 | 36 | 12B19 | - | - | - | - | - | - | 26.5K | 26.5K | 21 | 3/4X3 | |
| 2017 | - | 100 | 36 | 14WF43 | - | - | - | - | - | - | 106E | 106E | 39 | 3/4X3 | |
| 2018 | - | 100 | 36 | 16WF40 | - | - | - | - | - | - | 171A | 241A | 39 | 3/4X3 | |
| 2019 | - | 100 | 36 | 16WF36 | - | - | - | - | - | - | 26.5K | 36.0K | 8 | 3/4X3 | |
| 2020 | - | 100 | 36 | 12B19 | - | - | - | - | - | - | 26.5K | 26.5K | - | - | |
| 2021 | - | 100 | 50 | 16B31 | - | - | - | - | - | - | 106K | 106K | 12 | 3/4X3B | |
| 2022 | - | 100 | 36 | 8B13 | - | - | - | - | - | - | 17.4K | 17.4K | 11 | 3/4X3 | |
| 2023 | - | 100 | 36 | 12816.5 | - | - | - | - | - | - | 26.5K | 105L | 16 | 3/4X3 | |
| 2024 | - | 100 | 36 | 16WF40 | - | - | - | - | - | - | 374A | 26.5K | 39 | 3/4X3 | |
| 2025 | - | 100 | 36 | 16WF36 | - | - | - | - | - | - | 374A | 26.5K | 12 | 3/4X4-1/2C | |
| 2026 | - | 100 | 36 | 8B13 | - | - | - | - | - | - | 17.4K | 17.4K | 12 | 3/4X3 | |
| 2027 | - | 100 | 36 | 16B26 | - | - | - | - | - | - | 203B | 342A | 28 | 3/4X3 | |
| 2028 | 16X4 BX | 200 | 50 | - | 2-1/2 | 3/8 | 16 | 3/4 | - | - | 274C | 296D | - | - | |
| 2029 | - | 100 | 36 | 12816.5 | - | - | - | - | - | - | 26.5K | 26.5K | - | - | 1 |
| 2030 | - | 100 | 36 | 12816.5 | - | - | - | - | - | - | 26.5K | 26.5K | - | - | 1 |
| 2031 | - | 100 | 36 | 12816.5 | - | - | - | - | - | - | 26.5K | 26.5K | - | - | 1 |
| 2032 | - | 100 | 36 | 8B13 | - | - | - | - | - | - | 17.4K | 481A | - | - | |
| 2033 | - | 100 | 36 | 12WF27 | - | - | - | - | - | - | 26.5K | 26.5K | - | - | |

REMARKS

1. AT FLOOR 106 TOWERS A&B USE STUDS 16-3/4X3

LICENSED PROFESSIONAL ENGINEER — LESLIE E. ROBERTSON — No. 84360 — UNIVERSITY OF THE STATE OF NEW YORK

5-281-61

**SKILLING, HELLE, CHRISTIANSEN, ROBERTSON** — **Structural & Civil Engineers**

PROJECT: THE WORLD TRADE CENTER | TITLE: BEAM SCHEDULE TOWERS A AND B | DATE: 08/15/69

REVISIONS

| BEAM NO. | SIZE | TYPE | FY | PLATE 1 SHAPE | PLATE 1 WIDTH | PLATE 1 THICK | PLATE 2 WIDTH | PLATE 2 THICK | DIMENSIONS LENGTH | DIMENSIONS DIM. A | SUPPORTS LEFT | SUPPORTS RIGHT | STUDS NO. | STUDS SIZE | REMARKS |
|---|---|---|---|---|---|---|---|---|---|---|---|---|---|---|---|
| 2034 | - | 100 | 36 | 16WF36 | - | - | - | - | - | - | 111M | 26.5K | 30 | 3/4X3 | |
| 2035 | - | 100 | 36 | 8B13 | - | - | - | - | - | - | 17.4K | 17.4K | - | - | |
| 2036 | 16X5-1/28X | 201 | 36 | - | 4 | 3/8 | 16 | 3/4 | - | - | 450 | 450 | - | - | |
| 2037 | - | 100 | 36 | 16B31 | - | - | - | - | - | - | 475A | 26.5K | - | - | |
| 2038 | - | 100 | 36 | 14B22 | - | - | - | - | - | - | 224A | 342A | 19 | 3/4X3 | |
| 2039 | - | 100 | 36 | 16WF36 | - | - | - | - | - | - | 106E | 106E | 39 | 3/4X3 | X |
| 2040 | - | 100 | 50 | 16WF36 | - | - | - | - | - | - | 106F | 215B | - | - | |
| 2041 | - | 100 | 36 | 16WF36 | - | - | - | - | - | - | 130B | 399A | 19 | 3/4X3 | |
| 2042 | - | 100 | 36 | 16WF36 | - | - | - | - | - | - | 295A | 26.5K | - | - | |
| 2043 | - | 100 | 36 | 14B22 | - | - | - | - | - | - | 342A | 26.5K | 19 | 3/4X3 | |
| 2044 | - | 100 | 36 | 8B13 | - | - | - | - | - | - | 481A | 105C | 11 | 3/4X3 | |
| 2045 | 16X4 FX | 200 | 36 | - | 2-1/2 | 3/8 | 16 | 3/4 | - | - | 372A | 210A | - | - | |
| 2046 | - | 100 | 36 | 14B22 | - | - | - | - | - | - | 17.4K | 203B | 11 | 3/4X3 | |
| 2047 | - | 100 | 36 | 9CH13.4 | - | - | - | - | - | - | 17.4K | 17.4K | - | - | |
| 2048 | - | 100 | 36 | 14B26 | - | - | - | - | - | - | 266A | 357G | 19 | 3/4X3 | |
| 2049 | - | 100 | 36 | 14B22 | - | - | - | - | - | - | 342A | 266A | 8 | 3/4X3 | |
| 2050 | - | 100 | 36 | 16WF36 | - | - | - | - | - | - | 399A | 26.5K | 20 | 3/4X3 | |
| 2051 | - | 100 | 36 | 16WF36 | - | - | - | - | - | - | 208D | 352A | 8 | 3/4X3 | |
| 2052 | - | 100 | 36 | 14B22 | - | - | - | - | - | - | 26.5K | 201S | 20 | 3/4X3 | |
| 2053 | - | 100 | 36 | 16B26 | - | - | - | - | - | - | 346A | 201S | 8 | 3/4X3 | |
| 2054 | - | 100 | 36 | 12B19 | - | - | - | - | - | - | 26.5K | 105L | - | - | |
| 2055 | - | 100 | 36 | 12B16.5 | - | - | - | - | - | - | 26.5K | 26.5K | 15 | 3/4X3 | |
| 2056 | - | 100 | 36 | 14B22 | - | - | - | - | - | - | 26.5K | 26.5K | 24 | 3/4X3 | |
| 2057 | - | 100 | 36 | 14B22 | - | - | - | - | - | - | 26.5K | 26.5K | 19 | 3/4X3 | |
| 2058 | - | 100 | 36 | 12WF31 | - | - | - | - | - | - | 357B | 201Q | 12 | 3/4X3 | |
| 2059 | - | 100 | 36 | 14B22 | - | - | - | - | - | - | 111P | 266A | 19 | 3/4X3 | |
| 2060 | - | 100 | 36 | 14B22 | - | - | - | - | - | - | 26.5K | 26.5K | 24 | 3/4X3 | |
| 2061 | - | 100 | 36 | 12WF27 | - | - | - | - | - | - | 26.5K | 26.5K | - | - | 1 |
| 2062 | - | 100 | 36 | 12WF27 | - | - | - | - | - | - | 201Q | 105L | 13 | 3/4X4-1/2 | |
| 2063 | - | 100 | 36 | 12B16.5 | - | - | - | - | - | - | 105L | 105L | 15 | 3/4X4-1/2 | 1 |
| 2064 | - | 100 | 36 | 12WF27 | - | - | - | - | - | - | 111H | 111H | 12 | 3/4X4-1/2 | 1 |
| 2065 | - | 100 | 36 | 12B16.5 | - | - | - | - | - | - | 26.5K | 105L | 15 | 3/4X4-1/2B | |
| 2066 | - | 100 | 36 | 12B16.5 | - | - | - | - | - | - | 26.5K | 26.5K | 15 | 3/4X3 | |

REMARKS

1. AT FLOOR 106 TOWERS A&B USE STUDS 16-3/4X3

LICENSED PROFESSIONAL ENGINEER — LESLIE E. ROBERTSON — No. 34360 — UNIVERSITY OF THE STATE OF NEW YORK

**SKILLING, HELLE, CHRISTIANSEN, ROBERTSON** — **Structural & Civil Engineers**

PROJECT: THE WORLD TRADE CENTER | TITLE: BEAM SCHEDULE TOWERS A AND B | DATE: 9/30/69

REVISIONS

| BEAM NO. | SIZE | TYPE | FY | SHAPE | PLATE 1 WIDTH | PLATE 1 THICK | PLATE 2 WIDTH | PLATE 2 THICK | DIMENSIONS LENGTH | DIMENSIONS DIM. A | SUPPORTS LEFT | SUPPORTS RIGHT | STUDS NO. | STUDS SIZE | REMARKS | |
|---|---|---|---|---|---|---|---|---|---|---|---|---|---|---|---|---|
| 2067 | - | 100 | 36 | 8B13 | - | - | - | - | - | - | 17.4K | 17.4K | 11 | 3/4X3 | | |
| 2068 | - | 100 | 36 | 12B19 | - | - | - | - | - | - | 26.5K | 26.5K | - | - | | |
| 2069 | - | 100 | 36 | 8B13 | - | - | - | - | - | - | 17.4K | 17.4K | 8 | 3/4X3 | | |
| 2070 | - | 100 | 36 | 12B16.5 | - | - | - | - | - | - | 26.5K | 26.5K | 15 | 3/4X3 | | |
| 2071 | - | 100 | 36 | 16B31 | - | - | - | - | - | - | 106K | 106K | 39 | 3/4X3 | | |
| 2072 | - | 100 | 36 | 8B13 | - | - | - | - | - | - | 17.4K | 17.4K | 16 | 5/8X2 | | |
| 2073 | 16X4 BX | 200 | 36 | - | 2-1/2 | 3/8 | 16 | 3/4 | - | - | 274C | 296D | - | - | | X |
| 2074 | - | 100 | 36 | 14B22 | - | - | - | - | - | - | 26.5K | 26.5K | 19 | 3/4X3 | | |
| 2075 | - | 100 | 36 | 14B22 | - | - | - | - | - | - | 26.5K | 26.5K | 19 | 3/4X3 | | |
| 2076 | - | 100 | 36 | 14B22 | - | - | - | - | - | - | 342A | 224A | 25 | 3/4X3 | | |
| 2077 | - | 100 | 36 | 16B26 | - | - | - | - | - | - | 111P | 201P | 12 | 3/4X3 | | |
| 2078 | - | 100 | 36 | 16WF36 | - | - | - | - | - | - | 26.5K | 26.5K | 8 | 3/4X3 | | |
| 2079 | - | 100 | 36 | 16B26 | - | - | - | - | - | - | 26.5K | 201P | 12 | 3/4X3C | | 2,3 |
| 2080 | - | 100 | 36 | 16WF40 | - | - | - | - | - | - | 26.5K | 374A | 39 | 3/4X3 | | |
| 2081 | - | 100 | 36 | 16B26 | - | - | - | - | - | - | 216C | 342A | 28 | 3/4X3 | | |
| 2082 | - | 100 | 36 | 16WF40 | - | - | - | - | - | - | 374A | 171A | 39 | 3/4X3H | | |
| 2083 | - | 100 | 36 | 16WF36 | - | - | - | - | - | - | 374A | 26.5K | 12 | 3/4X4-1/2C | | |
| 2084 | - | 100 | 36 | 16WF45 | - | - | - | - | - | - | 106F | 106E | 39 | 3/4X3 | | |
| 2085 | - | 100 | 36 | 14WF43 | - | - | - | - | - | - | 106E | 106E | 39 | 3/4X3 | | |
| 2086 | - | 100 | 36 | 16WF40 | - | - | - | - | - | - | 266A | 106F | 42 | 3/4X3 | | |
| 2087 | - | 100 | 36 | 16WF40 | - | - | - | - | - | - | 106F | 106E | 39 | 3/4X3 | | |
| 2088 | - | 100 | 36 | 16WF36 | - | - | - | - | - | - | 106E | 106E | 8 | 3/4X3 | | |
| 2089 | - | 100 | 36 | 14B22 | - | - | - | - | - | - | 342A | 342A | 8 | 3/4X3 | | |
| 2090 | - | 100 | 36 | 16B26 | - | - | - | - | - | - | 203B | 216C | 19 | 3/4X3 | | |
| 2091 | 16X5-1/2BX | 201 | 36 | - | 4 | 3/8 | 16 | 3/4 | - | - | 296A | 296A | - | - | | |
| 2092 | - | 100 | 36 | 9CH13.4 | - | - | - | - | - | - | 517A | 501A | - | - | | |
| 2093 | - | 100 | 36 | 9CH13.4 | - | - | - | - | - | - | 501A | 517B | - | - | | |
| 2094 | - | 100 | 36 | 8B13 | - | - | - | - | - | - | 17.4K | 504A | - | - | | |
| 2095 | - | 100 | 36 | 8B13 | - | - | - | - | - | - | 504A | 17.4K | - | - | | |
| 2096 | - | 100 | 36 | 8B13 | - | - | - | - | - | - | 105H | 105H | - | - | | |
| 2097 | - | 100 | 36 | 8B13 | - | - | - | - | - | - | 283W | 283W | - | - | | |
| 2098 | - | 100 | 36 | 12B19 | - | - | - | - | - | - | 501A | 105L | - | - | | |
| 2099 | - | 100 | 36 | 12B19 | - | - | - | - | - | - | 501A | 501A | - | - | | 1 |

REMARKS

1 DETAIL 507 INTERMEDIATE SUPPORT OF BEAM
2 RIGHT CONNECTION AT FLOOR 105, 201S
3 RIGHT CONNECTION AT FLOOR 106, 26.5K STD.

LICENSED PROFESSIONAL ENGINEER — LESLIE E. ROBERTSON — No. 34360 — UNIVERSITY OF THE STATE OF NEW YORK

**SKILLING-HELLE-CHRISTIANSEN-ROBERTSON** — **Civil & Structural Engineers**

PROJECT: THE WORLD TRADE CENTER | TITLE: BEAM SCHEDULE TOWERS A AND B | DATE: 1/22/68

REVISIONS

| BEAM NO. | SIZE | TYPE | FY | SHAPE | PLATE 1 WIDTH | PLATE 1 THICK | PLATE 2 WIDTH | PLATE 2 THICK | DIMENSIONS LENGTH | DIMENSIONS DIM. A | SUPPORTS LEFT | SUPPORTS RIGHT | STUDS NO. | STUDS SIZE | REMARKS |
|---|---|---|---|---|---|---|---|---|---|---|---|---|---|---|---|
| 2100 | - | 100 | 36 | 14B22 | - | - | - | - | - | - | 105H | 283U | - | - | |
| 2101 | - | 100 | 36 | 9CH13.4 | - | - | - | - | - | - | 501A | 501A | - | - | |
| 2102 | - | 100 | 36 | 9CH13.4 | - | - | - | - | - | - | 501A | 17.4K | - | - | |
| 2103 | - | 100 | 36 | 16B31 | - | - | - | - | - | - | 28.4K | 26.5K | 24 | 3/4X3 | |
| 2104 | 16X4 BX | 200 | 36 | - | 2-1/2 | 3/8 | 16 | 3/4 | - | - | 274C | 296D | - | - | |
| 2105 | - | 100 | 50 | 16WF50 | - | - | - | - | - | - | 106E | 106E | (47) | 3/4X3 (G) | X |
| 2106 | - | 404 | 36 | 18WF50 | - | - | - | - | - | - | 274D | 61.3K | (26) | 3/4X3 | |
| 2108 | 16X7 WF | 400 | 36 | 16WF36 | 6 | 3/4 | - | - | 23FT 6 | 1FT 6 | 374B | 171A | (40) | 3/4X3 (H) | |
| 2109 | - | 100 | 36 | 18WF45 | - | - | - | - | - | - | 374B | 26.5K | (12) | 3/4X4-1/2C | |
| 2110 | - | 100 | 36 | 16WF45 | - | - | - | - | - | - | 106F | 106E | (39) | 3/4X3 | |
| 2111 | - | 100 | 36 | 16WF58 | - | - | - | - | - | - | 53.0K | 456D | - | - | |
| 2112 | - | 100 | 36 | 16WF58 | - | - | - | - | - | - | 53.0K | 53.0K | - | - | |
| 2113 | 38X7 BU | 301 | 36 | - | 7 | 1- 1/2 | 35 | 3/4 | - | - | 242A | 171B | - | - | 1 |
| 2114 | - | 100 | 36 | 18WF45 | - | - | - | - | - | - | 242A | 26.5K | (12) | 3/4X4-1/2C | |
| 2115 | - | 100 | 36 | 16WF45 | - | - | - | - | - | - | 106F | 106E | (47) | 3/4X3 | |
| 2116 | 27X6 BU | 300 | 36 | - | 6 | 1- 1/4 | 24-1/2 | 5/8 | - | - | 278A | 105E | - | - | |
| 2117 | - | 100 | 36 | 16WF58 | - | - | - | - | - | - | 456C | 53.0K | - | - | |
| 2118 | 27X7 BU | 300 | 36 | - | 7 | 1- 1/4 | 24-1/2 | 3/4 | - | - | 174B | 479A | - | - | |
| 2119 | 33X6 BU | 306 | 36 | - | 6 | 1- 1/8 | 30-3/4 | 5/8 | - | - | 44.2K | 105E | - | - | 2 |
| 2120 | - | 100 | 36 | 24WF68 | - | - | - | - | - | - | 106P | 106P | - | - | |
| 2121 | - | 100 | 36 | 24WF68 | - | - | - | - | - | - | 106P | 106P | (39) | 3/4X3 | |
| 2122 | - | 100 | 36 | 8B13 | - | - | - | - | - | - | 17.4K | 17.4K | - | - | |
| 2123 | - | 100 | 36 | 16WF45 | - | - | - | - | - | - | 106F | 106E | 54 | 3/4X3 | |
| 2124 | - | 100 | 36 | 14WF53 | - | - | - | - | - | - | 106E | 106E | (50) | 3/4X3 | |
| 2125 | - | 100 | 36 | 12B16.5 | - | - | - | - | - | - | 105K | 26.5K | (12) | 3/4X4-1/2C | |
| 2126 | - | 100 | 36 | 12B16.5 | - | - | - | - | - | - | 26.5K | 105L | 15 | 3/4X4-1/2B | |
| 2127 | - | 100 | 36 | 12B16.5 | - | - | - | - | - | - | 26.5K | 26.5K | 15 | 3/4X3 | |
| 2128 | - | 100 | 36 | 14B22 | - | - | - | - | - | - | 105K | 105L | 16 | 3/4X3 | |
| 2129 | - | 100 | 36 | 8B13 | - | - | - | - | - | - | 17.4K | 17.4K | 9 | 3/4X3 | |
| 2130 | - | 100 | 36 | 12B19 | - | - | - | - | - | - | 26.5K | 105L | 13 | 3/4X3 (B) | |
| 2131 | - | 100 | 36 | 16WF40 | - | - | - | - | - | - | 106F | 106E | (39) | 3/4X3 | |
| 2132 | - | 100 | 36 | 12B16.5 | - | - | - | - | - | - | 105L | 26.5K | 13 | 3/4X4-1/2C | |
| 2133 | - | 100 | 36 | 12B16.5 | - | - | - | - | - | - | 26.5K | 26.5K | 13 | 3/4X3 | |

REMARKS

1 REINF. PLATES 4FT-11 X 3/4

2 REINF. PLATES 3FT 6 X 1-1/8

LICENSED PROFESSIONAL ENGINEER — LESLIE E. ROBERTSON — No. 34360 — UNIVERSITY OF THE STATE OF NEW YORK

5-ABI- 64

**SKILLING, HELLE, CHRISTIANSEN, ROBERTSON** — Structural & Civil Engineers

PROJECT: THE WORLD TRADE CENTER | TITLE: BEAM SCHEDULE TOWERS A AND B | DATE: 08/15/69

REVISIONS

| BEAM NO. | SIZE | TYPE | FY | SHAPE | PLATE 1 WIDTH | PLATE 1 THICK | PLATE 2 WIDTH | PLATE 2 THICK | DIMENSIONS LENGTH | DIMENSIONS DIM. A | SUPPORTS LEFT | SUPPORTS RIGHT | STUDS NO. | STUDS SIZE | REMARKS |
|---|---|---|---|---|---|---|---|---|---|---|---|---|---|---|---|
| 2134 | - | 100 | 36 | 14WF43 | - | - | - | - | - | - | 106E | 106E | 42 | 3/4X3 | |
| 2135 | - | 100 | 36 | 16WF40 | - | - | - | - | - | - | 106E | L11A | 44 | 3/4X3 | |
| 2136 | - | 400 | 36 | 16WF40 | 6 | 3/4 | - | - | - | - | 106E | 260A | 44 | 3/4X3 | |
| 2137 | - | 100 | 36 | 14WF43 | - | - | - | - | - | - | 106E | 106E | 41 | 3/4X3 | |
| 2138 | - | 100 | 36 | 16WF45 | - | - | - | - | - | - | 106F | 106E | 41 | 3/4X3 | |
| 2139 | - | 100 | 36 | 16WF36 | - | - | - | - | - | - | 111M | 26.5K | 12 | 3/4X4-1/2C | X |
| 2140 | - | 100 | 36 | 12B16.5 | - | - | - | - | - | - | 26.5K | 105L | 15 | 3/4X4-1/2B | 1 |
| 2141 | - | 100 | 36 | 12B16.5 | - | - | - | - | - | - | 26.5K | 26.5K | - | - | 1 |
| 2142 | - | 100 | 36 | 16WF45 | - | - | - | - | - | - | 106F | 106E | 48 | 3/4X3 | |
| 2143 | - | 100 | 36 | 14WF43 | - | - | - | - | - | - | 106E | 106E | 47 | 3/4X3 | |
| 2144 | - | 100 | 36 | 14B22 | - | - | - | - | - | - | 105K | 105L | 20 | 3/4X3 | |
| 2145 | - | 100 | 36 | 8B13 | - | - | - | - | - | - | 17.4K | 17.4K | - | - | |
| 2146 | - | 100 | 36 | 16WF40 | - | - | - | - | - | - | 106E | 314C | 43 | 3/4X3 | |
| 2147 | - | 100 | 36 | 12B19 | - | - | - | - | - | - | 26.5K | 105L | 15 | 3/4X3B | |
| 2148 | - | 100 | 36 | 16WF40 | - | - | - | - | - | - | 106F | 106E | 39 | 3/4X3 | |
| 2149 | - | 100 | 36 | 14B22 | - | - | - | - | - | - | 105K | 105L | 15 | 3/4X3 | |
| 2150 | - | 100 | 36 | 12B16.5 | - | - | - | - | - | - | 26.5K | 26.5K | - | - | |
| 2151 | - | 100 | 36 | 16WF40 | - | - | - | - | - | - | 106E | 106E | 43 | 3/4X3 | |
| 2152 | - | 100 | 36 | 14WF43 | - | - | - | - | - | - | 106E | 106E | 39 | 3/4X3 | |
| 2153 | - | 100 | 50 | 12WF31 | - | - | - | - | - | - | 105L | 201Q | 12 | 3/4X3 | |
| 2154 | - | 100 | 50 | 12B19 | - | - | - | - | - | - | 26.5K | 26.5K | 30 | 3/4X3 | 1 |
| 2155 | - | 100 | 36 | 16B26 | - | - | - | - | - | - | 105L | 201Q | 24 | 3/4X3 | |
| 2156 | - | 100 | 50 | 12B19 | - | - | - | - | - | - | 26.5K | 26.5K | 30 | 3/4X3 | |
| 2157 | - | 100 | 50 | 12B19 | - | - | - | - | - | - | 26.5K | 26.5K | 30 | 3/4X3 | |
| 2158 | - | 100 | 36 | 16B31 | - | - | - | - | - | - | 106K | 106L | 34 | 3/4X3 | |
| 2159 | - | 100 | 50 | 12B16.5 | - | - | - | - | - | - | 26.5K | 26.5K | 22 | 3/4X3 | |
| 2160 | - | 100 | 50 | 16B31 | - | - | - | - | - | - | 26.5K | 26.5K | 48 | 3/4X3 | |
| 2161 | - | 100 | 36 | 12B19 | - | - | - | - | - | - | 26.5K | 105L | - | - | |
| 2162 | - | 100 | 36 | 12B16.5 | - | - | - | - | - | - | 105L | 201Q | 15 | 3/4X4-1/2 | |
| 2163 | - | 100 | 36 | 30WF99 | - | - | - | - | - | - | 105E | 105E | - | - | |
| 2164 | - | 100 | 36 | 15CH40.0 | - | - | - | - | - | - | 290A | 290A | - | - | |
| 2165 | - | 100 | 36 | 16WF36 | - | - | - | - | - | - | 26.5K | 111A | 34 | 3/4X3 | |
| 2166 | - | 100 | 36 | 8B13 | - | - | - | - | - | - | 17.4K | 17.4K | - | - | |

REMARKS

1. AT FLOOR 106 TOWERS A&B USE STUDS 16-3/4X3

LICENSED PROFESSIONAL ENGINEER — LESLIE E. ROBERTSON — No. 34360 — UNIVERSITY OF THE STATE OF NEW YORK

5-AB1- 65

**SKILLING-HELLE-CHRISTIANSEN-ROBERTSON** — **Civil & Structural Engineers**

PROJECT: THE WORLD TRADE CENTER | TITLE: BEAM SCHEDULE TOWERS A AND B | DATE: 1/22/66

REVISIONS

| BEAM NO. | SIZE | TYPE | FY | SHAPE | PLATE 1 WIDTH | PLATE 1 THICK | PLATE 2 WIDTH | PLATE 2 THICK | DIMENSIONS LENGTH | DIMENSIONS DIM. A | SUPPORTS LEFT | SUPPORTS RIGHT | STUDS NO. | STUDS SIZE | REMARKS |
|---|---|---|---|---|---|---|---|---|---|---|---|---|---|---|---|
| 2167 | 16X4 BX | 200 | 36 | - | 2-1/2 | 3/8 | 16 | 3/4 | - | - | 372A | 210A | - | - | |
| 2168 | 16X7WF | 400 | 36 | 16WF36 | 6 | 3/4 | - | - | 23FT 6 | 1FT 6 | 171A | 374A | 44 | 3/4X3 | |
| 2169 | - | 100 | 36 | 16WF40 | - | - | - | - | - | - | 374A | 26.5K | 44 | 3/4X3 | |
| 2170 | - | 100 | 50 | 16WF50 | - | - | - | - | - | - | 106E | 106E | 47 | 3/4X3 | |
| 2171 | - | 402 | 36 | 16WF36 | 6 | 1/2 | - | - | 20FT 6 | - | 106E | 215B | 30 | 5/8X2C | |
| 2172 | 18X4 BX | 200 | 36 | - | 2-1/2 | 3/8 | 18 | 3/4 | - | - | 274D | 296D | - | - | X |
| 2173 | - | 100 | 36 | 16WF36 | - | - | - | - | - | - | 295A | 26.5K | - | - | |
| 2174 | 20X6 BU | 300 | 36 | - | 6 | 3/4 | 18-1/2 | 3/8 | - | - | 201R | 179B | 6 | 3/4X3C | |
| 2175 | - | 100 | 50 | 16B31 | - | - | - | - | - | - | 106K | 106K | 12 | 3/4X3B | |
| 2176 | - | 100 | 50 | 14B22 | - | - | - | - | - | - | 26.5K | 105L | 8 | 3/4X3B | |
| 2177 | - | 100 | 36 | 6B13 | - | - | - | - | - | - | 17.4K | 17.4K | 16 | 5/8X2 | |
| 2178 | - | 100 | 50 | 12B19 | - | - | - | - | - | - | 26.5K | 26.5K | 36 | 5/8X2 | |
| 2179 | - | 100 | 36 | 30WF108 | - | - | - | - | - | - | 35.3K | 295 | - | - | |
| 2180 | 33X6 BU | 306 | 36 | - | 6 | 1- 1/8 | 30-3/4 | 5/8 | - | - | 44.2K | 105E | - | - | 4 |
| 2181 | 25X6 BU | 306 | 36 | - | 6 | 1- 1/8 | 22-3/4 | /8 | - | - | 44.2K | 105E | - | - | 4 |
| 2182 | 25X6 BU | 300 | 36 | - | 6 | 1- 1/4 | 22-1/2 | 1/2 | - | - | 278A | 105E | - | - | |
| 2183 | - | 100 | 36 | 16WF36 | - | - | - | - | - | - | 374A | 26.5K | 15 | 3/4X3C | |
| 2184 | 20X7 BU | 300 | 36 | - | 7 | 1- 1/4 | 17-1/2 | 1/2 | - | - | 242B | 26.5K | 12 | 3/4X3C | |
| 2185 | - | 100 | 36 | 16WF36 | - | - | - | - | - | - | 26.5K | 26.5K | - | - | |
| 2186 | - | 100 | 36 | 16WF36 | - | - | - | - | - | - | 303A | 205I | - | - | 3 |
| 2187 | - | 100 | 36 | 12B16.5 | - | - | - | - | - | - | 26.5K | 26.5K | - | - | |
| 2188 | 30X9 BX | 251 | 36 | - | 9 | 1 | 28 | 3/8 | - | - | 347B | 264A | - | - | |
| 2189 | 30X9 BX | 251 | 36 | - | 9 | 1 | 28 | 3/8 | - | - | 248A | 347B | - | - | |
| 2190 | - | 100 | 50 | 12CH50.0 | - | - | - | - | - | - | 226A | 248A | - | - | |
| 2191 | - | 100 | 36 | 15CH40.0 | - | - | - | - | - | - | 264A | 426A | - | - | |
| 2192 | - | 100 | 50 | 12CH50.0 | - | - | - | - | - | - | 311D | 226A | - | - | |
| 2193 | - | 100 | 36 | 16WF40 | - | - | - | - | - | - | 401A | 401A | - | - | |
| 2194 | - | 100 | 36 | 16WF40 | - | - | - | - | - | - | 205F | 335C | - | - | 2 |
| 2195 | - | 100 | 36 | 16B26 | - | - | - | - | - | - | 111P | 201P | 12 | 3/4X3 | |
| 2196 | 25X7 BU | 300 | 36 | - | 7 | 1- 1/2 | 22 | 3/4 | - | - | 174B | 35.3K | - | - | |
| 2197 | - | 100 | 36 | 14B22 | - | - | - | - | - | - | 26.5K | 26.5K | - | - | |
| 2198 | - | 100 | 50 | 12B19 | - | - | - | - | - | - | 26.5K | 105L | 12 | 3/4X4-1/2B | |
| 2199 | - | 100 | 36 | 14B22 | - | - | - | - | - | - | 105K | 105L | 8 | 3/4X3 | |

REMARKS

2 DETAIL 405 RIGHT END OF BEAM
3 DETAIL 507 RIGHT END OF BEAM
4 REINF. PLATES 3FT 6 X 1-1/8

LICENSED PROFESSIONAL ENGINEER — LESLIE E. ROBERTSON — No. 34360 — UNIVERSITY OF THE STATE OF NEW YORK

**SKILLING, HELLE, CHRISTIANSEN, ROBERTSON** — **Structural & Civil Engineers**

PROJECT: THE WORLD TRADE CENTER | TITLE: BEAM SCHEDULE TOWERS A AND B | DATE: 08/15/69

REVISIONS

| BEAM NO. | SIZE | TYPE | FY | SHAPE | PLATE 1 WIDTH | PLATE 1 THICK | PLATE 2 WIDTH | PLATE 2 THICK | DIMENSIONS LENGTH | DIMENSIONS DIM. A | SUPPORTS LEFT | SUPPORTS RIGHT | STUDS NO. | STUDS SIZE | REMARKS |
|---|---|---|---|---|---|---|---|---|---|---|---|---|---|---|---|
| 2200 | - | 100 | 36 | 16WF40 | - | - | - | - | - | - | 106F | 215B | 12 | 3/4X3C | |
| 2201 | - | 100 | 50 | 12B16.5 | - | - | - | - | - | - | 105L | 26.5K | 15 | 3/4X4-1/2C | |
| 2202 | - | 100 | 50 | 12B16.5 | - | - | - | - | - | - | 26.5K | 26.5K | 26 | 3/4X3 | |
| 2203 | - | 100 | 36 | 12B16.5 | - | - | - | - | - | - | 26.5K | 26.5K | - | - | 2 |
| 2204 | - | 100 | 36 | 12B16.5 | - | - | - | - | - | - | 26.5K | 26.5K | - | - | 2 |
| 2205 | - | 100 | 36 | 8B13 | - | - | - | - | - | - | 17.4K | 17.4K | 12 | 3/4X3 | X |
| 2206 | - | 100 | 50 | 8B13 | - | - | - | - | - | - | 17.4K | 17.4K | - | - | |
| 2207 | - | 100 | 36 | 8B13 | - | - | - | - | - | - | 17.4K | 17.4K | - | - | |
| 2208 | - | 100 | 36 | 8B13 | - | - | - | - | - | - | 17.4K | 17.4K | - | - | |
| 2209 | - | 100 | 36 | 8B13 | - | - | - | - | - | - | 17.4K | 17.4K | - | - | |
| 2210 | - | 100 | 50 | 10B15 | - | - | - | - | - | - | 17.4K | 17.4K | 16 | 3/4X3 | |
| 2211 | - | 100 | 50 | 16WF36 | - | - | - | - | - | - | 314C | 106E | 40 | 3/4X3 | |
| 2212 | - | 100 | 50 | 16WF40 | - | - | - | - | - | - | 106E | 106E | 45 | 3/4X3 | |
| 2213 | - | 100 | 50 | 14WF43 | - | - | - | - | - | - | 106E | 106E | 46 | 3/4X3 | |
| 2214 | - | 100 | 50 | 12B19 | - | - | - | - | - | - | 26.5K | 105L | 30 | 3/4X3 | |
| 2215 | - | 100 | 36 | 16WF40 | - | - | - | - | - | - | 106F | 215B | 12 | 3/4X3C | 1 |
| 2216 | - | 100 | 36 | 12B16.5 | - | - | - | - | - | - | 105L | 26.5K | 15 | 3/4X4-1/2C | |
| 2217 | - | 100 | 50 | 12B16.5 | - | - | - | - | - | - | 26.5K | 26.5K | - | - | |
| 2218 | - | 100 | 36 | 8B13 | - | - | - | - | - | - | 17.4K | 17.4K | - | - | |
| 2219 | - | 100 | 50 | 12B16.5 | - | - | - | - | - | - | 26.5K | 26.5K | - | - | 2 |
| 2220 | - | 100 | 50 | 14B22 | - | - | - | - | - | - | 105K | 105L | 8 | 3/4X3 | |
| 2221 | - | 100 | 50 | 16WF36 | - | - | - | - | - | - | 106E | 106E | 34 | 3/4X3 | |
| 2222 | - | 100 | 50 | 12B16.5 | - | - | - | - | - | - | 26.5K | 105L | 15 | 3/4X4-1/2B | 2 |
| 2223 | - | 100 | 50 | 14WF43 | - | - | - | - | - | - | 106E | 106E | 39 | 3/4X3 | |
| 2224 | - | 100 | 50 | 16WF36 | - | - | - | - | - | - | 111M | 26.5K | 12 | 3/4X3C | 2 |
| 2225 | - | 100 | 50 | 14WF43 | - | - | - | - | - | - | 106E | 106E | 26 | 3/4X3 | |
| 2226 | - | 100 | 50 | 16B31 | - | - | - | - | - | - | 106K | 106L | 40 | 3/4X3 | |
| 2227 | - | 100 | 50 | 16WF36 | - | - | - | - | - | - | 314C | 106E | 34 | 3/4X3 | |
| 2228 | - | 100 | 50 | 12CH50.0 | - | - | - | - | - | - | 226A | 311C | - | - | |
| 2229 | - | 100 | 36 | 15CH33.9 | - | - | - | - | - | - | 426A | 421A | - | - | |
| 2230 | - | 100 | 36 | 15CH33.9 | - | - | - | - | - | - | 290A | 290A | - | - | |
| 2231 | - | 100 | 36 | 15CH33.9 | - | - | - | - | - | - | 422A | 426A | - | - | |
| 2232 | - | 100 | 50 | 12CH50.0 | - | - | - | - | - | - | 311D | 226A | - | - | |
| 2233 | - | 100 | 50 | 12CH50.0 | - | - | - | - | - | - | 226A | 311D | - | - | |

REMARKS

1 BEAM FLOOR 100 ONLY TO HAVE 2-7 DIA SLEEVES 8 FROM THE TOP FLANGE LOCATED AT 145 FT 0 AND 148 FT 0 RESPECTIVELY.

2 AT FLOOR 106 TOWERS A&B USE STUDS 16-3/4X3

LICENSED PROFESSIONAL ENGINEER — LESLIE E. ROBERTSON — No. 34360 — UNIVERSITY OF THE STATE OF NEW YORK

5-A81- 67

**SKILLING, HELLE, CHRISTIANSEN, ROBERTSON** — **Structural & Civil Engineers**

PROJECT: THE WORLD TRADE CENTER | TITLE: BEAM SCHEDULE TOWERS A AND B | DATE: 08/15/69

REVISIONS

| BEAM NO. | SIZE | TYPE | FY | SHAPE | PLATE 1 WIDTH | PLATE 1 THICK | PLATE 2 WIDTH | PLATE 2 THICK | DIMENSIONS LENGTH | DIMENSIONS DIM. A | SUPPORTS LEFT | SUPPORTS RIGHT | STUDS NO. | STUDS SIZE | REMARKS |
|---|---|---|---|---|---|---|---|---|---|---|---|---|---|---|---|
| 2234 | - | 100 | 36 | 15CH33.9 | - | - | - | - | - | - | 426A | 421A | - | - | |
| 2235 | - | 100 | 36 | 15CH33.9 | - | - | - | - | - | - | 290A | 290A | - | - | |
| 2236 | - | 100 | 50 | 12CH45.0 | - | - | - | - | - | - | 426A | 428A | - | - | |
| 2237 | - | 100 | 50 | 12CH50.0 | - | - | - | - | - | - | 311D | 226A | - | - | |
| 2238 | 18X4 CH | 507 | 50 | 18CH51.9 | | | - | - | - | - | 226A | 243A | - | - | 1 |
| 2239 | 12X4 CH | 505 | 50 | 12CH50.0 | 2-7/8 | 3/4 | - | - | 12FT 4 | 1FT 0 | 440A | 441A | - | - | |
| 2240 | 15X3-3/8CH | 504 | 50 | 15CH40.0 | 2-1/2 | 1/2 | - | - | 26FT 0 | 1FT 0 | 243A | 243B | - | - | 2 |
| 2241 | 15X3-3/8CH | 505 | 50 | 15CH40.0 | 2-1/2 | 1/2 | - | - | 26FT 1 | 1FT 0 | 243B | 243A | - | - | 3 |
| 2242 | 12X4 CH | 505 | 50 | 12CH50.0 | 2-7/8 | 3/4 | - | - | 12FT 3 | 1FT 0 | 441B | 440A | - | - | |
| 2243 | 18X4 CH | 500 | 50 | 18CH51.9 | - | - | - | - | - | - | 243A | 226A | - | - | 1 |
| 2244 | 18X4 CH | 507 | 50 | 18CH51.9 | - | - | - | - | - | - | 226A | 243A | - | - | 1 |
| 2245 | 12X4 CH | 505 | 50 | 12CH50.0 | 2-7/8 | 3/4 | - | - | 12FT 3 | 1FT 0 | 440A | 441B | - | - | |
| 2246 | 15X3-3/8CH | 515 | 50 | 15CH40.0 | 2-1/2 | 1/2 | - | - | 26FT 1 | 1FT 0 | 243A | 243B | - | - | 2 |
| 2247 | 15X3-3/8CH | 505 | 50 | 15CH40.0 | 2-1/2 | 1/2 | - | - | 26FT 0 | 1FT 0 | 243B | 243A | - | - | 3 |
| 2248 | 12X4 CH | 505 | 50 | 12CH50.0 | 2-7/8 | 3/4 | - | - | 12FT 4 | 1FT 0 | 441A | 440A | - | - | |
| 2249 | 18X4 CH | 500 | 50 | 18CH51.9 | - | - | - | - | - | - | 243A | 226A | - | - | 1 |
| 2250 | - | 100 | 36 | 14B22 | - | - | - | - | - | - | 26.5K | 26.5K | 22 | 3/4X3 | |
| 2251 | - | 100 | 36 | 16WF45 | - | - | - | - | - | - | 106E | 106E | 44 | 3/4X3 | |
| 2252 | - | 100 | 36 | 15CH40.0 | - | - | - | - | - | - | 290A | 290A | - | - | |
| 2253 | - | 100 | 36 | 16B31 | - | - | - | - | - | - | 111P | 111P | - | - | |
| 2254 | - | 100 | 36 | 12B16.5 | - | - | - | - | - | - | 26.5K | 26.5K | - | - | 4 |
| 2255 | - | 100 | 36 | 16WF36 | - | - | - | - | - | - | 419B | 401A | - | - | |
| 2256 | - | 100 | 50 | 12CH50.0 | - | - | - | - | - | - | 226A | 248A | - | - | |
| 2257 | 30X9 BX | 251 | 36 | - | 9 | 1 | 28 | 3/8 | - | - | 248A | 347B | - | - | |
| 2258 | 30X9 BX | 251 | 36 | - | 9 | 1- 1/2 | 27 | 3/8 | - | - | 347B | 264A | - | - | |
| 2259 | - | 100 | 50 | 12CH50.0 | - | - | - | - | - | - | 264A | 428A | - | - | |
| 2260 | - | 100 | 50 | 12CH50.0 | - | - | - | - | - | - | 311D | 226A | - | - | |
| 2261 | 25X7 BU | 300 | 36 | - | 7 | 1- 1/2 | 22 | 3/4 | - | - | 479A | 174B | - | - | |
| 2262 | - | 100 | 36 | 14WF48 | - | - | - | - | - | - | 35.0K | 35.0K | - | - | |
| 2263 | - | 100 | 50 | 16WF45 | - | - | - | - | - | - | 106E | 106E | 49 | 3/4X3 | |
| 2264 | - | 100 | 36 | 8WF17 | - | - | - | - | - | - | 17.4K | 17.4K | - | - | |
| 2265 | 24X7 BU | 300 | 36 | - | 7 | 1 | 22 | 3/4 | - | - | 35.3K | 35.3K | - | - | |
| 2266 | - | 100 | 36 | 16WF50 | - | - | - | - | - | - | 106K | 106K | - | - | |

REMARKS

1 REINF. PLATE 3FT 9 X 1
2 DETAIL 442A RIGHT END OF BEAM
3 DETAIL 442A LEFT END OF BEAM
4 AT FLOOR 106 TOWERS A&B USE STUDS 16-3/4X3

LICENSED PROFESSIONAL ENGINEER — LESLIE E. ROBERTSON — No. 34360 — UNIVERSITY OF THE STATE OF NEW YORK

**SKILLING, HELLE, CHRISTIANSEN, ROBERTSON** — **Structural & Civil Engineers**

PROJECT: THE WORLD TRADE CENTER | TITLE: BEAM SCHEDULE TOWERS A AND B | DATE: 08/15/69

REVISIONS

| BEAM NO. | SIZE | TYPE | FY | SHAPE | PLATE 1 WIDTH | PLATE 1 THICK | PLATE 2 WIDTH | PLATE 2 THICK | DIMENSIONS LENGTH | DIMENSIONS DIM. A | SUPPORTS LEFT | SUPPORTS RIGHT | STUDS NO. | STUDS SIZE | REMARKS |
|---|---|---|---|---|---|---|---|---|---|---|---|---|---|---|---|
| 2267 | - | 100 | 36 | 16WF36 | - | - | - | - | - | - | 292 | 26.5K | - | - | |
| 2268 | - | 100 | 36 | 12B19 | - | - | - | - | - | - | 26.5K | 212 | - | - | |
| 2269 | - | 100 | 36 | 15CH33.9 | - | - | - | - | - | - | 311D | 290A | - | - | |
| 2270 | - | 100 | 36 | 12B16.5 | - | - | - | - | - | - | 26.5K | 26.5K | 24 | 3/4X3 | |
| 2271 | - | 100 | 36 | 12B16.5 | - | - | - | - | - | - | 17.4K | 481 | - | - | |
| 2272 | - | 100 | 36 | 16B26 | - | - | - | - | - | - | 26.5K | 294D | - | - | X |
| 2273 | - | 100 | 36 | 12WF36 | - | - | - | - | - | - | 26.5K | 26.5K | - | - | |
| 2274 | - | 100 | 36 | 8B13 | - | - | - | - | - | - | 17.4K | 17.4K | - | - | |
| 2275 | - | 100 | 50 | 16WF40 | - | - | - | - | - | - | 26.5K | 26.5K | 47 | 3/4X3H | |
| 2276 | - | 100 | 50 | 16WF36 | - | - | - | - | - | - | 111M | 26.5K | 56 | 3/4X3 | 2 |
| 2277 | - | 100 | 50 | 16WF45 | - | - | - | - | - | - | 106F | 106E | 39 | 3/4X3 | |
| 2278 | - | 100 | 36 | 16B26 | - | - | - | - | - | - | 346A | 201S | 8 | 3/4X3 | |
| 2279 | - | 100 | 36 | 14B22 | - | - | - | - | - | - | 105K | 105L | 8 | 3/4X3 | |
| 2280 | - | 100 | 36 | 16WF40 | - | - | - | - | - | - | 266A | 106F | 8 | 3/4X3C | |
| 2281 | - | 100 | 50 | 16WF40 | - | - | - | - | - | - | 106E | 106E | 39 | 3/4X3G | |
| 2282 | - | 100 | 50 | 12B16.5 | - | - | - | - | - | - | 26.5K | 26.5K | 15 | 3/4X3 | |
| 2283 | - | 100 | 36 | 8B13 | - | - | - | - | - | - | 17.4K | 17.4K | 12 | 3/4X3 | |
| 2284 | - | 100 | 50 | 16WF40 | - | - | - | - | - | - | 106E | 106E | 62 | 3/4X3 | |
| 2285 | - | 100 | 50 | 14WF43 | - | - | - | - | - | - | 106E | 106E | 40 | 3/4X3 | |
| 2286 | - | 100 | 36 | 9CH13.4 | - | - | - | - | - | - | 517A | 501A | - | - | |
| 2287 | - | 100 | 36 | 8B13 | - | - | - | - | - | - | 17.7K | 17.7K | - | - | |
| 2288 | - | 100 | 36 | 9CH13.4 | - | - | - | - | - | - | 501A | 517A | - | - | |
| 2289 | - | 100 | 36 | 16WF36 | - | - | - | - | - | - | 170B | 287G | 15 | 3/4X3B | |
| 2290 | - | 100 | 36 | 8B13 | - | - | - | - | - | - | 105H | 105H | - | - | |
| 2291 | - | 100 | 36 | 8B13 | - | - | - | - | - | - | 201T | 201T | - | - | |
| 2292 | - | 100 | 36 | 14B22 | - | - | - | - | - | - | 501A | 105L | - | - | |
| 2293 | - | 100 | 36 | 12B19 | - | - | - | - | - | - | 501A | 501A | - | - | 1 |
| 2294 | - | 100 | 36 | 14B22 | - | - | - | - | - | - | 501A | 201S | - | - | |
| 2295 | - | 100 | 36 | 9CH13.4 | - | - | - | - | - | - | 501A | 501A | - | - | |
| 2296 | - | 100 | 36 | 16WF40 | - | - | - | - | - | - | 238A | 106F | 8 | 3/4X3C | |
| 2297 | - | 100 | 50 | 16B31 | - | - | - | - | - | - | 26.5K | 26.5K | 48 | 3/4X3 | |
| 2298 | - | 100 | 50 | 12B16.5 | - | - | - | - | - | - | 26.5K | 26.5K | 8 | 3/4X3 | |
| 2299 | - | 404 | 36 | 18WF50 | - | - | - | - | - | - | 26.5K | 475A | 26 | 3/4X3 | |

REMARKS

1 DETAIL 507 INTERMEDIATE SUPPORT OF BEAM
2. AT FLOOR 106 TOWERS A&B USE STUDS 16-3/4X3

LICENSED PROFESSIONAL ENGINEER — LESLIE E. ROBERTSON — No. 34360 — UNIVERSITY OF THE STATE OF NEW YORK

5-AB1- 69

**SKILLING-HELLE-CHRISTIANSEN-ROBERTSON** — **Civil & Structural Engineers**

PROJECT: THE WORLD TRADE CENTER | TITLE: BEAM SCHEDULE TOWERS A AND B | DATE: 10/ 9/68

REVISIONS

| BEAM NO. | SIZE | TYPE | FY | SHAPE | PLATE 1 WIDTH | PLATE 1 THICK | PLATE 2 WIDTH | PLATE 2 THICK | DIMENSIONS LENGTH | DIMENSIONS DIM. A | SUPPORTS LEFT | SUPPORTS RIGHT | STUDS NO. | STUDS SIZE | REMARKS |
|---|---|---|---|---|---|---|---|---|---|---|---|---|---|---|---|
| 2300 | 18X5 BU | 300 | 36 | - | 5 | 3/4 | 16-1/2 | 3/8 | - | - | 105B | 105B | 6 | 3/4X3B | |
| 2301 | 18X4 BX | 200 | 36 | - | 2-1/2 | 3/8 | 18 | 3/4 | - | - | 210A | 210A | - | - | |
| 2302 | 21X7 BU | 300 | 36 | - | 7 | 1 | 19 | 3/8 | - | - | 106P | 215D | 8 | 3/4X3C | |
| 2303 | 30X7 BU | 300 | 36 | - | 7 | 1-1/2 | 27 | 7/8 | - | - | 295G | 313J | 28 | 3/4X3 | 2 |
| 2304 | 16X7 WF | 400 | 36 | 16WF36 | 6 | 3/4 | - | - | 23FT 6 | 1FT 6 | 26.5K | 26.5K | 40 | 3/4X3 | |
| 2305 | - | 100 | 36 | 12WF27 | - | - | - | - | - | - | 26.5K | 26.5K | - | - | |
| 2306 | - | 100 | 50 | 18WF45 | - | - | - | - | - | - | 105N | 26.5K | 12 | 3/4X3C | |
| 2307 | - | 100 | 50 | 12B14 | - | - | - | - | - | - | 26.5K | 105L | 15 | 3/4X3C | |
| 2308 | - | 100 | 50 | 12B16.5 | - | - | - | - | - | - | 105L | 26.5K | 15 | 3/4X3C | |
| 2309 | - | 100 | 36 | 8B13 | - | - | - | - | - | - | 17.4K | 17.4K | - | - | |
| 2310 | - | 100 | 36 | 18WF45 | - | - | - | - | - | - | 456D | 26.5K | - | - | 4 |
| 2311 | - | 100 | 36 | 16WF36 | - | - | - | - | - | - | 352B | 287E | 39 | 3/4X3J | |
| 2312 | - | 100 | 50 | 16B31 | - | - | - | - | - | - | 106K | 106K | 30 | 3/4X3 | |
| 2313 | - | 100 | 50 | 16B31 | - | - | - | - | - | - | 106K | 106L | 48 | 3/4X3 | |
| 2314 | - | 100 | 36 | 14B22 | - | - | - | - | - | - | 26.5K | 201S | 20 | 3/4X3 | |
| 2315 | - | 404 | 36 | 16WF45 | - | - | - | - | - | - | 26.5K | 26.5K | 26 | 3/4X3 | |
| 2316 | - | 100 | 50 | 12B19 | - | - | - | - | - | - | 26.5K | 26.5K | 36 | 5/8X2 | |
| 2317 | - | 100 | 36 | 8B13 | - | - | - | - | - | - | 17.4K | 17.4K | 16 | 5/8X2 | |
| 2318 | - | 100 | 36 | 16WF36 | - | - | - | - | - | - | 26.5K | 287E | 39 | 3/4X3J | |
| 2319 | - | 100 | 36 | 12B16.5 | - | - | - | - | - | - | 26.5K | 170A | 13 | 3/4X3 | |
| 2320 | - | 100 | 36 | 12B19 | - | - | - | - | - | - | 26.5K | 170A | - | - | |
| 2321 | - | 100 | 36 | 18WF45 | - | - | - | - | - | - | 456C | 26.5K | - | - | |
| 2322 | - | 100 | 36 | 18WF45 | - | - | - | - | - | - | 456B | 26.5K | - | - | |
| 2323 | 24X6 BU | 300 | 36 | - | 6 | 1- 1/2 | 21 | 5/8 | - | - | 179D | 398C | - | - | |
| 2324 | - | 100 | 36 | 18WF45 | - | - | - | - | - | - | 53.0K | 53.0K | - | - | |
| 2325 | 24X6 BU | 300 | 36 | - | 6 | 1- 1/4 | 21-1/2 | 1/2 | - | - | 201R | 201R | - | - | |
| 2326 | 30X7 BU | 300 | 36 | - | 7 | 1 | 28 | 5/8 | - | - | 106P | 215C | 12 | 3/4X3B | |
| 2327 | 21X7 BU | 300 | 36 | - | 7 | 1- 3/4 | 17-1/2 | 3/4 | - | - | 259G | 26.5K | - | - | 3 |
| 2328 | 24X7 BU | 300 | 36 | - | 7 | 1- 1/2 | 21 | 3/4 | - | - | 53.0K | 53.0K | - | - | |
| 2329 | 38X7 BU | 301 | 36 | - | 7 | 1- 3/4 | 34-1/2 | 3/4 | - | - | 35.3K | 35.3K | 20 | 3/4X3 | 1 |
| 2330 | 20X7 BU | 300 | 36 | - | 7 | 3/4 | 18-1/2 | 3/8 | - | - | 105E | 26.5K | 12 | 3/4X3C | |
| 2331 | 20X6 BU | 300 | 36 | - | 6 | 1 | 18 | 3/8 | - | - | 201R | 179B | 6 | 3/4X3C | |
| 2332 | - | 100 | 50 | 16WF36 | - | - | - | - | - | - | 106E | 106F | 39 | 3/4X3 | |
| 2333 | - | 100 | 36 | 16B31 | - | - | - | - | - | - | 106K | 106K | 12 | 3/4X3 | |

REMARKS

1 REINF. PLATES 4FT-8 X 3/4
2 DETAIL 204F INTERMEDIATE SUPPORT OF BEAM
3 DETAIL 204C INTERMEDIATE SUPPORT OF BEAM AT COL. 903 AND 904
4 DETAIL 456E LEFT END OF BEAM

LICENSED PROFESSIONAL ENGINEER ★ LESLIE E. ROBERTSON ★ No. 34360 ★ UNIVERSITY OF THE STATE OF NEW YORK

5-A81- 70

**SKILLING, HELLE, CHRISTIANSEN, ROBERTSON** — Structural & Civil Engineers

PROJECT: THE WORLD TRADE CENTER | TITLE: BEAM SCHEDULE TOWERS A AND B | DATE: 9/30/69

REVISIONS

| BEAM NO. | SIZE | TYPE | FY | SHAPE | PLATE 1 WIDTH | PLATE 1 THICK | PLATE 2 WIDTH | PLATE 2 THICK | DIMENSIONS LENGTH | DIMENSIONS DIM. A | SUPPORTS LEFT | SUPPORTS RIGHT | STUDS NO. | STUDS SIZE | REMARKS |
|---|---|---|---|---|---|---|---|---|---|---|---|---|---|---|---|
| 2334 | - | 100 | 36 | 12B19 | - | - | - | - | - | - | 26.5K | 26.5K | 36 | 5/8X2 | |
| 2335 | - | 100 | 36 | 21WF55 | - | - | - | - | - | - | 263A | 263A | - | - | |
| 2336 | - | 100 | 36 | 21WF55 | - | - | - | - | - | - | 263A | 263A | - | - | |
| 2337 | - | 100 | 36 | 21WF55 | - | - | - | - | - | - | 35.3K | 35.3K | - | - | |
| 2338 | - | 100 | 36 | 8B13 | - | - | - | - | - | - | 17.4K | 17.4K | - | - | |
| 2339 | - | 100 | 50 | 12B16.5 | - | - | - | - | - | - | 105L | 26.5K | 12 | 3/4X4-1/2C | |
| 2340 | - | 100 | 50 | 12B16.5 | - | - | - | - | - | - | 26.5K | 26.5K | 26 | 3/4X3 | |
| 2341 | - | 100 | 50 | 12B16.5 | - | - | - | - | - | - | 26.5K | 105L | 6 | 3/4X3B | |
| 2342 | - | 100 | 50 | 16WF36 | - | - | - | - | - | - | 201S | 179A | 10 | 3/4X3C | 4 |
| 2343 | - | 100 | 36 | 16WF40 | - | - | - | - | - | - | 295A | 26.5K | 8 | 3/4X3B | |
| 2344 | - | 100 | 50 | 12B19 | - | - | - | - | - | - | 26.5K | 105L | 12 | 3/4X4-1/2B | |
| 2345 | - | 100 | 50 | 12B19 | - | - | - | - | - | - | 26.5K | 26.5K | 30 | 3/4X3 | |
| 2346 | - | 100 | 50 | 12B19 | - | - | - | - | - | - | 170A | 105L | 30 | 3/4X3 | |
| 2347 | - | 100 | 50 | 12B19 | - | - | - | - | - | - | 26.5K | 26.5K | 30 | 3/4X3 | |
| 2348 | - | 100 | 36 | 8B13 | - | - | - | - | - | - | 105H | 105H | 12 | 3/4X4-1/2 | |
| 2349 | - | 100 | 36 | 8B13 | - | - | - | - | - | - | 17.4K | 17.4K | 12 | 3/4X3 | |
| 2350 | - | 100 | 36 | 8B13 | - | - | - | - | - | - | 17.4K | 17.4K | 12 | 3/4X3 | |
| 2351 | - | 100 | 36 | 8B13 | - | - | - | - | - | - | 201T | 201T | 12 | 3/4X3 | |
| 2352 | - | 100 | 50 | 14WF43 | - | - | - | - | - | - | 106E | 106E | 47 | 3/4X3 | |
| 2353 | - | 100 | 50 | 16WF36 | - | - | - | - | - | - | 106E | 106F | 47 | 3/4X3 | |
| 2354 | - | 100 | 36 | 16B31 | - | - | - | - | - | - | 106K | 106K | 8 | 3/4X3B | |
| 2355 | - | 100 | 50 | 16WF40 | - | - | - | - | - | - | 314C | 106E | 49 | 3/4X3 | |
| 2356 | - | 100 | 50 | 16WF40 | - | - | - | - | - | - | 106E | 106E | 49 | 3/4X3 | |
| 2357 | - | 100 | 50 | 16WF40 | - | - | - | - | - | - | 106E | 106E | 49 | 3/4X3 | |
| 2358 | - | 404 | 50 | 16WF40 | - | - | - | - | - | - | 106E | 106E | 49 | 3/4X3 | |
| 2359 | - | 100 | 36 | 16WF36 | - | - | - | - | - | - | 170B | 106B | - | - | |
| 2360 | - | 100 | 50 | 14WF43 | - | - | - | - | - | - | 106E | 106E | 49 | 3/4X3 | |
| 2361 | - | 100 | 50 | 16WF40 | - | - | - | - | - | - | 106E | 215B | 12 | 3/4X3C | 3 |
| 2362 | - | 100 | 36 | 16WF40 | - | - | - | - | - | - | - | - | - | - | |
| 2363 | - | 100 | 36 | 16B26 | - | - | - | - | - | - | 26.5K | 170B | 24 | 3/4X3 | |
| 2364 | - | 100 | 36 | 10WF21 | - | - | - | - | - | - | 283R | 17.4K | - | - | 1 |
| 2365 | - | 100 | 36 | 10WF21 | - | - | - | - | - | - | 17.4K | 283R | - | - | 2 |

REMARKS

1 ONE SIDED ANGLE CONNECTION RIGHT END OF BEAM
2 ONE SIDED ANGLE CONNECTION LEFT END OF BEAM
3 BEAM 2361 AT FLOOR 103 ONLY TO HAVE 6IN DIA SLEEVE AT 140FT 0 AND 7IN DIA SLEEVE AT 142FT 3 BOTH 7IN BELOW TOP FLANGE TO CENTER LINE OF SLEEVE.
4 LEFT CONNECTION AT FLOOR 106, 203D

LICENSED PROFESSIONAL ENGINEER — LESLIE E. ROBERTSON — No. 34360 — UNIVERSITY OF THE STATE OF NEW YORK

5-AB1- 71

**SKILLING, HELLE, CHRISTIANSEN, ROBERTSON** — Structural & Civil Engineers

PROJECT: THE WORLD TRADE CENTER | TITLE: BEAM SCHEDULE TOWERS A AND B | DATE: 9/30/69

REVISIONS

| BEAM NO. | SIZE | TYPE | FY | PLATE 1 SHAPE | PLATE 1 WIDTH | PLATE 1 THICK | PLATE 2 WIDTH | PLATE 2 THICK | DIMENSIONS LENGTH | DIMENSIONS DIM. A | SUPPORTS LEFT | SUPPORTS RIGHT | STUDS NO. | STUDS SIZE | REMARKS |
|---|---|---|---|---|---|---|---|---|---|---|---|---|---|---|---|
| 2367 | - | 100 | 36 | 16WF36 | - | - | - | - | - | - | 26.5K | 287 | 39 | 3/4X3 | |
| 2368 | - | 100 | 36 | 8B13 | - | - | - | - | - | - | 484 | 17.4K | - | - | |
| 2369 | - | 100 | 36 | 12WF36 | - | - | - | - | - | - | 105L | 105L | - | - | |
| 2370 | - | 100 | 50 | 16WF36 | - | - | - | - | - | - | 106E | 106F | 39 | 3/4X3 | |
| 2371 | - | 100 | 36 | 8B13 | - | - | - | - | - | - | 105H | 105H | 12 | 3/4X4-1/2 | |
| 2372 | - | 100 | 36 | 8B13 | - | - | - | - | - | - | 17.4K | 17.4K | 12 | 3/4X3 | |
| 2373 | - | 100 | 36 | 8B13 | - | - | - | - | - | - | 17.4K | 17.4K | 12 | 3/4X3 | |
| 2374 | - | 100 | 36 | 8B13 | - | - | - | - | - | - | 201T | 201T | 12 | 3/4X3 | |
| 2375 | - | 100 | 36 | 16B31 | - | - | - | - | - | - | 106K | 106K | 8 | 3/4X38 | |
| 2376 | - | 100 | 50 | 16WF40 | - | - | - | - | - | - | 26.5K | 26.5K | 62 | 3/4X3 | |
| 2377 | - | 100 | 50 | 12B19 | - | - | - | - | - | - | 26.5K | 105L | 12 | 3/4X4-1/2B | |
| 2378 | - | 100 | 50 | 12B19 | - | - | - | - | - | - | 26.5K | 26.5K | 30 | 3/4X3 | |
| 2379 | - | 100 | 50 | 12B19 | - | - | - | - | - | - | 26.5K | 26.5K | 30 | 3/4X3 | |
| 2380 | - | 100 | 50 | 12B19 | - | - | - | - | - | - | 170A | 105L | 30 | 3/4X3 | |
| 2381 | - | 100 | 50 | 16WF36 | - | - | - | - | - | - | 106E | 215B | 8 | 3/4X3C | |
| 2382 | - | 100 | 50 | 16WF45 | - | - | - | - | - | - | 106E | 106E | 49 | 3/4X3 | |
| 2383 | - | 100 | 36 | 16WF40 | - | - | - | - | - | - | 295A | 26.5K | - | - | |
| 2384 | - | 100 | 50 | 12B19 | - | - | - | - | - | - | 26.5K | 26.5K | 30 | 3/4X3 | |
| 2385 | - | 100 | 36 | 12B19 | - | - | - | - | - | - | 26.5K | 26.5K | - | - | |
| 2386 | - | 100 | 50 | 12B19 | - | - | - | - | - | - | 17.4K | 17.4K | - | - | |
| 2387 | - | 100 | 50 | 12B19 | - | - | - | - | - | - | 26.5K | 26.5K | - | - | |
| 2388 | - | 100 | 36 | 8B13 | - | - | - | - | - | - | 481 | 201 | 12 | 3/4X3 | |
| 2389 | - | 100 | 36 | 14B22 | - | - | - | - | - | - | 111P | 111P | 12 | 3/4X3 | |
| 2390 | - | 100 | 50 | 12B16.5 | - | - | - | - | - | - | 26.5K | 507 | 26 | 3/4X3 | |
| 2391 | - | 100 | 50 | 12B16.5 | - | - | - | - | - | - | 105 | 201 | 26 | 3/4X3 | |
| 2392 | - | 100 | 50 | 12B16.5 | - | - | - | - | - | - | 26.5K | 507 | 26 | 3/4X3 | |
| 2393 | - | 100 | 50 | 12WF45 | - | - | - | - | - | - | 105 | 201 | 40 | 3/4X3 | |
| 2394 | - | 100 | 50 | 10B15 | - | - | - | - | - | - | 17.4K | 17.4K | 22 | 3/4X3 | |
| 2395 | - | 100 | 50 | 14B22 | - | - | - | - | - | - | 342 | 224 | 34 | 3/4X3 | |
| 2396 | - | 100 | 50 | 14B22 | - | - | - | - | - | - | 342 | 224 | 34 | 3/4X3 | |
| 2397 | - | 100 | 50 | 12B16.5 | - | - | - | - | - | - | 26.5K | 506 | 26 | 3/4X3 | |
| 2398 | - | 100 | 50 | 12WF31 | - | - | - | - | - | - | 201 | 105 | 40 | 3/4X3 | |
| 2399 | - | 100 | 36 | 12WF27 | - | - | - | - | - | - | 26.5K | 507 | - | - | |

LICENSED PROFESSIONAL ENGINEER — LESLIE E. ROBERTSON — No. 34360 — UNIVERSITY OF THE STATE OF NEW YORK

**SKILLING-HELLE-CHRISTIANSEN-ROBERTSON** — **Civil & Structural Engineers**

PROJECT: THE WORLD TRADE CENTER | TITLE: BEAM SCHEDULE TOWERS A AND B | DATE: 07/11/69

REVISIONS

| BEAM NO. | SIZE | TYPE | FY | PLATE 1 SHAPE | PLATE 1 WIDTH | PLATE 1 THICK | PLATE 2 WIDTH | PLATE 2 THICK | DIMENSIONS LENGTH | DIMENSIONS DIM. A | SUPPORTS LEFT | SUPPORTS RIGHT | STUDS NO. | STUDS SIZE | REMARKS |
|---|---|---|---|---|---|---|---|---|---|---|---|---|---|---|---|
| 2400 | - | 100 | 50 | 14B22 | - | - | - | - | - | - | 201 | 201 | 34 | 3/4X3 | |
| 2401 | - | 100 | 50 | 12B16.5 | - | - | - | - | - | - | 26.5K | 507 | 26 | 3/4X3 | |
| 2402 | - | 100 | 50 | 12B16.5 | - | - | - | - | - | - | 26.5K | 507 | 26 | 3/4X3 | |
| 2403 | - | 100 | 50 | 12B16.5 | - | - | - | - | - | - | 26.5K | 26.5K | 26 | 3/4X3 | |
| 2404 | - | 100 | 50 | 12B16.5 | - | - | - | - | - | - | 26.5K | 105 | 26 | 3/4X3 | |
| 2405 | - | 100 | 50 | 16B31 | - | - | - | - | - | - | 105 | 26.5K | 26 | 3/4X3 | |
| 2406 | - | 100 | 50 | 12B16.5 | - | - | - | - | - | - | 26.5K | 26.5K | 26 | 3/4X3 | |
| 2407 | - | 100 | 50 | 16B26 | - | - | - | - | - | - | 26.5K | 105 | 40 | 3/4X3 | |
| 2408 | - | 100 | 50 | 16B31 | - | - | - | - | - | - | 26.5K | 26.5K | 15 | 3/4X3C | |
| 2409 | - | 100 | 50 | 16B26 | - | - | - | - | - | - | 203 | 342 | 40 | 3/4X3 | |
| 2410 | - | 100 | 50 | 16B26 | - | - | - | - | - | - | 216 | 342 | 40 | 3/4X3 | |
| 2411 | - | 100 | 36 | 16WF36 | - | - | - | - | - | - | 105 | 26.5K | 30 | 3/4X3 | |
| 2412 | - | 100 | 50 | 16B26 | - | - | - | - | - | - | 26.5K | 26.5K | 15 | 3/4X3C | |
| 2413 | - | 100 | 50 | 12B16.5 | - | - | - | - | - | - | 26.5K | 26.5K | 26 | 3/4X3 | |
| 2414 | - | 100 | 50 | 16WF36 | - | - | - | - | - | - | 105 | 26.5K | 12 | 3/4X3C | |
| 2415 | - | 100 | 50 | 12B16.5 | - | - | - | - | - | - | 26.5K | 105 | 26 | 3/4X3 | |
| 2416 | - | 100 | 50 | 12B16.5 | - | - | - | - | - | - | 26.5K | 26.5K | 26 | 3/4X3 | |
| 2417 | - | 100 | 36 | 8B13 | - | - | - | - | - | - | 17.4K | 17.4K | 12 | 3/4X3 | |
| 2418 | - | 100 | 36 | 8B13 | - | - | - | - | - | - | 105 | 105 | 12 | 3/4X3 | |
| 2419 | - | 100 | 36 | 8B13 | - | - | - | - | - | - | 17.4K | 17.4K | 12 | 3/4X3 | |
| 2420 | - | 100 | 36 | 12WF27 | - | - | - | - | - | - | 105K | 105L | 12 | 3/4X3 | |
| 2421 | - | 100 | 36 | 16B26 | - | - | - | - | - | - | 346 | 201 | - | - | |
| 2422 | - | 100 | 36 | 16WF64 | - | - | - | - | - | - | 266A | 106F | 8 | 3/4X3C | |
| 2423 | - | 100 | 36 | 14B22 | - | - | - | - | - | - | 26.5K | 203 | - | - | |
| 2424 | - | 100 | 36 | 14B22 | - | - | - | - | - | - | 339 | 105 | 12 | 3/4X3 | |
| 2425 | - | 100 | 36 | 8B13 | - | - | - | - | - | - | 17.4K | 17.4K | 12 | 3/4X3 | |
| 2426 | - | 100 | 50 | 12WF27 | - | - | - | - | - | - | 201 | 201 | 12 | 3/4X3 | |
| 2427 | - | 100 | 50 | 12B16.5 | - | - | - | - | - | - | 26.5K | 26.5K | 26 | 3/4X3 | |
| 2428 | - | 100 | 50 | 12B16.5 | - | - | - | - | - | - | 105 | 26.5K | 26 | 3/4X3 | |
| 2429 | - | 100 | 50 | 16B26 | - | - | - | - | - | - | 26.5K | 105 | 26 | 3/4X3 | |
| 2430 | - | 100 | 50 | 12B16.5 | - | - | - | - | - | - | 26.5K | 26.5K | 26 | 3/4X3 | |
| 2431 | - | 100 | 50 | 16B26 | - | - | - | - | - | - | 212 | 26.5K | 26 | 3/4X3 | |
| 2432 | - | 100 | 50 | 12B16.5 | - | - | - | - | - | - | 26.5K | 26.5K | 26 | 3/4X3 | |
| 2433 | - | 100 | 50 | 12B16.5 | - | - | - | - | - | - | 170 | 105 | 26 | 3/4X3 | |

LICENSED PROFESSIONAL ENGINEER — LESLIE E. ROBERTSON — No. 34960 — UNIVERSITY OF THE STATE OF NEW YORK

5-AB1-73

**SKILLING-HELLE-CHRISTIANSEN-ROBERTSON** — **Civil & Structural Engineers**

| PROJECT | TITLE | DATE |
|---|---|---|
| THE WORLD TRADE CENTER | BEAM SCHEDULE TOWERS A AND B | 1/22/68 |

REVISIONS

| BEAM NO. | SIZE | TYPE | FY | SHAPE | PLATE 1 WIDTH | PLATE 1 THICK | PLATE 2 WIDTH | PLATE 2 THICK | DIMENSIONS LENGTH | DIMENSIONS DIM. A | SUPPORTS LEFT | SUPPORTS RIGHT | STUDS NO. | STUDS SIZE | REMARKS |
|---|---|---|---|---|---|---|---|---|---|---|---|---|---|---|---|
| 2434 | - | 100 | 50 | 14B22 | - | - | - | - | - | - | 313J | 26.5K | (20) | 3/4X3 | |
| 2435 | - | 100 | 50 | 14B26 | - | - | - | - | - | - | 266 | 357 | 40 | 3/4X3 | |
| 2436 | - | 100 | 50 | 12B19 | - | - | - | - | - | - | 26.5K | 201 | 30 | 3/4X3 | |
| 2437 | - | 100 | 50 | 12B16.5 | - | - | - | - | - | - | 105 | 26.5K | 26 | 3/4X3 | |
| 2438 | - | 100 | 50 | 12B16.5 | - | - | - | - | - | - | 26.5K | 26.5K | 26 | 3/4X3 | |
| 2439 | - | 100 | 50 | 16WF40 | - | - | - | - | - | - | 26.5K | 292 | 47 | 3/4X3 | |
| 2440 | - | 100 | 50 | 16WF40 | - | - | - | - | - | - | 26.5K | 26.5K | 47 | 3/4X3H | |
| 2441 | - | 100 | 50 | 12WF27 | - | - | - | - | - | - | 201 | 105 | 34 | 3/4X3 | |
| 2442 | - | 100 | 36 | 12WF27 | - | - | - | - | - | - | 503 | 26.5K | - | - | |
| 2443 | 30X5-1/2BX | 252 | 36 | - | 5-1/2 | 3/4 | 28-1/2 | 3/8 | - | - | 296 | 296 | - | - | |
| 2444 | - | 100 | 36 | 30WF99 | - | - | - | - | - | - | 224 | 313J | (12) | 3/4X3 | |
| 2445 | - | 100 | 50 | 14B22 | - | - | - | - | - | - | 201 | 266 | 34 | 3/4X3 | |
| 2446 | - | 100 | 50 | 12B16.5 | - | - | - | - | - | - | 26.5K | 26.5K | 26 | 3/4X3 | |
| 2447 | - | 100 | 50 | 12WF27 | - | - | - | - | - | - | 357 | 26.5K | 40 | 3/4X3 | |
| 2448 | - | 100 | 50 | 12B16.5 | - | - | - | - | - | - | 507 | 26.5K | 26 | 3/4X3 | |
| 2449 | - | 100 | 50 | 12B16.5 | - | - | - | - | - | - | 201 | 201 | 26 | 3/4X3 | |
| 2450 | - | 100 | 50 | 12B16.5 | - | - | - | - | - | - | 507 | 26.5K | 26 | 3/4X3 | |
| 2451 | - | 100 | 50 | 12B16.5 | - | - | - | - | - | - | 507 | 26.5K | 26 | 3/4X3 | |
| 2452 | - | 100 | 36 | 14B22 | - | - | - | - | - | - | 26.5K | 26.5K | - | - | |
| 2453 | - | 100 | 36 | 16B26 | - | - | - | - | - | - | 26.5K | 26.5K | - | - | |
| 2454 | - | 100 | 50 | 16B31 | - | - | - | - | - | - | 106 | 106 | 48 | 3/4X3 | |
| 2455 | - | 100 | 50 | 16WF36 | - | - | - | - | - | - | 106 | 106 | (47) | 3/4X3 | |
| 2456 | - | 100 | 50 | 16WF36 | - | - | - | - | - | - | 106 | 106 | (47) | 3/4X3 | |
| 2457 | - | 100 | 36 | 14B22 | - | - | - | - | - | - | 342 | 342 | - | - | |
| 2458 | - | 100 | 50 | 16WF40 | - | - | - | - | - | - | 314 | 106 | (47) | 3/4X3 | |
| 2459 | 12X3 CH | 505 | 36 | 12CH50 | 2-1/8 | 3/4 | - | - | FULL LENGTH | | 229 | 311 | - | - | |
| 2460 | 12X3 CH | 505 | 36 | 12CH50 | 2-1/8 | 3/4 | - | - | FULL LENGTH | | 229 | 311 | - | - | |
| 2461 | - | 100 | 36 | 16WF36 | - | - | - | - | - | - | 26.5K | 26.5K | - | - | |
| 2462 | - | 100 | 50 | 16B26 | - | - | - | - | - | - | 203 | 216 | (8) | 3/4X3 | |
| 2463 | - | 100 | 50 | 16WF40 | - | - | - | - | - | - | 106 | 314 | (47) | 3/4X3 | |
| 2464 | - | 100 | 50 | 16WF40 | - | - | - | - | - | - | 106 | 106 | (47) | 3/4X3 | |
| 2465 | - | 100 | 50 | 16WF40 | - | - | - | - | - | - | 106 | 106 | (47) | 3/4X3 | |
| 2466 | - | 100 | 50 | 16WF36 | - | - | - | - | - | - | 26.5K | 26.5K | 56 | 3/4X3 | |

LICENSED PROFESSIONAL ENGINEER LESLIE E. ROBERTSON NO. 34360 STATE OF NEW YORK

5-Aug-74

**SKILLING-HELLE-CHRISTIANSEN-ROBERTSON** — **Civil & Structural Engineers**

PROJECT: THE WORLD TRADE CENTER | TITLE: BEAM SCHEDULE TOWERS A AND B | DATE: 1/22/68

REVISIONS

| BEAM NO. | SIZE | TYPE | FY | SHAPE | PLATE 1 WIDTH | PLATE 1 THICK | PLATE 2 WIDTH | PLATE 2 THICK | DIMENSIONS LENGTH | DIMENSIONS DIM. A | SUPPORTS LEFT | SUPPORTS RIGHT | STUDS NO. | STUDS SIZE | REMARKS |
|---|---|---|---|---|---|---|---|---|---|---|---|---|---|---|---|
| 2467 | - | 100 | 50 | 16WF40 | - | - | - | - | - | - | 106 | 106 | 47 | 3/4X3 | |
| 2468 | - | 100 | 50 | 16WF36 | - | - | - | - | - | - | 106 | 106 | 47 | 3/4X3 | |
| 2469 | - | 100 | 50 | 16WF40 | - | - | - | - | - | - | 106 | 214 | 12 | 3/4X3 | C |
| 2470 | 30X7 BU | 300 | 36 | - | 7 | 1-1/2 | 27 | 7/8 | - | - | 212 | 26.5K | 20 | 3/4X3 | |
| 2471 | - | 100 | 36 | 14B22 | - | - | - | - | - | - | 313J | 266 | 8 | 3/4X3 | |
| 2472 | - | 100 | 36 | 16WF64 | - | - | - | - | - | - | 266 | 106 | 12 | 3/4X3 | X |
| 2473 | - | 100 | 36 | 16WF64 | - | - | - | - | - | - | 106 | 106 | 47 | 3/4X3 | |
| 2474 | - | 100 | 50 | 16WF36 | - | - | - | - | - | - | 106 | 106 | 47 | 3/4X3 | |
| 2475 | - | 100 | 36 | 12B16.5 | - | - | - | - | - | - | 17.4K | 17.4K | - | - | |
| 2476 | 30X5-1/2BU | 300 | 36 | - | 5-1/2 | 1-1/2 | 27 | 3/8 | - | - | 475 | 26.5K | - | - | |
| 2477 | - | 100 | 36 | 16B31 | - | - | - | - | - | - | 26.5K | 26.5K | - | - | |
| 2478 | - | 100 | 36 | 16B26 | - | - | - | - | - | - | 26.5K | 26.5K | 12 | 3/4X3 | |
| 2479 | - | 100 | 50 | 12B19 | - | - | - | - | - | - | 26.5K | 26.5K | - | - | |
| 2480 | - | 100 | 50 | 12B19 | - | - | - | - | - | - | 26.5K | 26.5K | 15 | 3/4X3 | |
| 2481 | - | 100 | 36 | 12B19 | - | - | - | - | - | - | 26.5K | 26.5K | - | - | |
| 2482 | - | 100 | 50 | 12B19 | - | - | - | - | - | - | 17.4K | 17.4K | 30 | 3/4X3 | |
| 2483 | - | 100 | 50 | 16B26 | - | - | - | - | - | - | 26.5K | 26.5K | 15 | 3/4X3 | |
| 2484 | - | 100 | 50 | 16B26 | - | - | - | - | - | - | 105 | 201 | 15 | 3/4X3 | |
| 2485 | - | 100 | 50 | 16B26 | - | - | - | - | - | - | 26.5K | 26.5K | 15 | 3/4X3 | |
| 2486 | - | 100 | 50 | 12B16.5 | - | - | - | - | - | - | 26.5K | 26.5K | 15 | 3/4X3 | |
| 2487 | - | 100 | 50 | 16B31 | - | - | - | - | - | - | 26.5K | 26.5K | - | - | |
| 2488 | - | 100 | 36 | 12WF45 | - | - | - | - | - | - | 105 | 201 | 15 | 3/4X3 | |
| 2489 | - | 100 | 50 | 16B26 | - | - | - | - | - | - | 105 | 201 | 15 | 3/4X3 | |
| 2490 | - | 100 | 50 | 16B26 | - | - | - | - | - | - | 105 | 201 | 15 | 3/4X3 | |
| 2491 | - | 100 | 50 | 14B22 | - | - | - | - | - | - | 26.5K | 26.5K | 12 | 3/4X3 | |
| 2492 | - | 100 | 50 | 16B26 | - | - | - | - | - | - | 201 | 105 | 15 | 3/4X3 | |
| 2493 | - | 100 | 50 | 12WF27 | - | - | - | - | - | - | 26.5K | 26.5K | 15 | 3/4X3 | |
| 2494 | - | 100 | 50 | 16B26 | - | - | - | - | - | - | 201 | 201 | 15 | 3/4X3 | |
| 2495 | - | 100 | 50 | 16B26 | - | - | - | - | - | - | 26.5K | 26.5K | 15 | 3/4X3 | |
| 2496 | - | 100 | 50 | 30WF116 | - | - | - | - | - | - | 494 | 44.2K | 40 | 3/4X3 | |
| 2497 | - | 100 | 50 | 16B26 | - | - | - | - | - | - | 26.5K | 105 | 40 | 3/4X3 | |
| 2498 | - | 100 | 50 | 16B26 | - | - | - | - | - | - | 105 | 26.5K | 40 | 3/4X3 | |
| 2499 | - | 100 | 50 | 16B26 | - | - | - | - | - | - | 26.5K | 26.5K | 40 | 3/4X3 | |

LICENSED PROFESSIONAL ENGINEER — LESLIE E. ROBERTSON — No. 34360 — UNIVERSITY OF THE STATE OF NEW YORK

S-AB1- 75

**SKILLING-HELLE-CHRISTIANSEN-ROBERTSON** — **Civil & Structural Engineers**

PROJECT: THE WORLD TRADE CENTER | TITLE: BEAM SCHEDULE TOWERS A AND B | DATE: 1/22/68

REVISIONS

| BEAM NO. | SIZE | TYPE | FY | PLATE 1 SHAPE | PLATE 1 WIDTH | PLATE 1 THICK | PLATE 2 WIDTH | PLATE 2 THICK | DIMENSIONS LENGTH | DIMENSIONS DIM. A | SUPPORTS LEFT | SUPPORTS RIGHT | STUDS NO. | STUDS SIZE | REMARKS |
|---|---|---|---|---|---|---|---|---|---|---|---|---|---|---|---|
| 2500 | - | 100 | 50 | 16B26 | - | - | - | - | - | - | 26.5K | 105 | 40 | 3/4X3 | |
| 2501 | - | 100 | 50 | 16B26 | - | - | - | - | - | - | 26.5K | 26.5K | 15 | 3/4X3C | |
| 2502 | - | 100 | 36 | 16WF36 | - | - | - | - | - | - | 475 | 201 | - | - | |
| 2503 | - | 100 | 50 | 16B26 | - | - | - | - | - | - | 208 | 342 | 40 | 3/4X3 | |
| 2504 | - | 100 | 50 | 12WF31 | - | - | - | - | - | - | 357B | 201Q | 15 | 3/4X3 | |
| 2505 | - | 100 | 36 | 16WF36 | - | - | - | - | - | - | 26.5K | 208H | 12 | 3/4X3B | X |
| 2506 | - | 100 | 36 | 16WF40 | - | - | - | - | - | - | 220I | 208H | 40 | 3/4X3G | |
| 2507 | - | 100 | 36 | 12B16.5 | - | - | - | - | - | - | 105D | 26.5K | 15 | 3/4X3 | |
| 2508 | - | 100 | 36 | 12B16.5 | - | - | - | - | - | - | 26.5K | 26.5K | - | - | |
| 2509 | - | 100 | 36 | 14B22 | - | - | - | - | - | - | 26.5K | 26.5K | 13 | 3/4X3 | |
| 2510 | - | 100 | 36 | 16WF45 | - | - | - | - | - | - | 106D | 111L | 30 | 3/4X3 | |
| 2511 | - | 404 | 50 | 16WF45 | - | - | - | - | - | - | 26.5K | 274C | 26 | 3/4X3 | |
| 2512 | - | 404 | 36 | 16WF50 | - | - | - | - | - | - | 274C | 475A | 26 | 3/4X3 | |
| 2513 | - | 404 | 36 | 16WF50 | - | - | - | - | - | - | 26.5K | 274C | 26 | 3/4X3 | |
| 2514 | - | 404 | 36 | 16WF45 | - | - | - | - | - | - | 274C | 26.5K | 26 | 3/4X3 | |
| 2515 | - | 100 | 36 | 12B19 | - | - | - | - | - | - | 26.5K | 26.5K | 44 | 5/8X2 | |
| 2516 | - | 100 | 50 | 12CH50.0 | - | - | - | - | - | - | 226A | 311D | - | - | |
| 2517 | - | 100 | 50 | 12CH45.0 | - | - | - | - | - | - | 428A | 426A | - | - | |
| 2518 | - | 100 | 36 | 15CH33.9 | - | - | - | - | - | - | 311D | 311D | - | - | |
| 2519 | - | 100 | 36 | 16WF36 | - | - | - | - | - | - | 283U | 506B | - | - | |
| 2520 | - | 100 | 36 | 16WF36 | - | - | - | - | - | - | 283U | 506A | - | - | |
| 2521 | 20X6 8U | 300 | 36 | - | 6 | 3/4 | 18-1/2 | 3/8 | - | - | 201R | 179B | 6 | 3/4X3C | |
| 2522 | - | 100 | 50 | 16B31 | - | - | - | - | - | - | 106K | 106K | 12 | 3/4X3B | |
| 2523 | - | 100 | 36 | 16WF36 | - | - | - | - | - | - | 26.5K | 106 | 8 | 3/4X3 | |
| 2524 | - | 100 | 50 | 16B26 | - | - | - | - | - | - | 216 | 342 | 40 | 3/4X3 | |
| 2525 | - | 100 | 50 | 16WF36 | - | - | - | - | - | - | 111M | 26.5K | 30 | 3/4X3 | |
| 2526 | - | 100 | 36 | 16WF40 | - | - | - | - | - | - | 208H | 287G | 40 | 3/4X3D | |
| 2527 | - | 100 | 36 | 16WF36 | - | - | - | - | - | - | 26.5K | 26.5K | 8 | 3/4X3 | |
| 2528 | - | 100 | 36 | 16WF40 | - | - | - | - | - | - | 26.5K | 241A | 39 | 3/4X3 | |
| 2529 | - | 100 | 36 | 16WF40 | - | - | - | - | - | - | 241A | 171A | 39 | 3/4X3H | |
| 2530 | - | 100 | 36 | 14B26 | - | - | - | - | - | - | 26.5K | 357G | 19 | 3/4X3 | |
| 2531 | - | 100 | 36 | 14B22 | - | - | - | - | - | - | 342A | 238A | 8 | 3/4X3 | |
| 2532 | - | 100 | 36 | 14B22 | - | - | - | - | - | - | 370J | 342A | 19 | 3/4X3 | |
| 2533 | - | 100 | 36 | 14B22 | - | - | - | - | - | - | 111P | 111P | 19 | 3/4X3 | |

LICENSED PROFESSIONAL ENGINEER — LESLIE E. ROBERTSON — NO. 34360 — UNIVERSITY OF THE STATE OF NEW YORK

**SKILLING, HELLE, CHRISTIANSEN, ROBERTSON** — **Structural & Civil Engineers**

PROJECT: THE WORLD TRADE CENTER | TITLE: BEAM SCHEDULE TOWERS A AND B | DATE: 7/7/68

REVISIONS

| BEAM NO. | SIZE | TYPE | FY | SHAPE | PLATE 1 WIDTH | PLATE 1 THICK | PLATE 2 WIDTH | PLATE 2 THICK | DIMENSIONS LENGTH | DIMENSIONS DIM. A | SUPPORTS LEFT | SUPPORTS RIGHT | STUDS NO. | STUDS SIZE | REMARKS |
|---|---|---|---|---|---|---|---|---|---|---|---|---|---|---|---|
| 2534 | - | 100 | 36 | 16WF40 | - | - | - | - | - | - | 238A | 106F | 8 | 3/4X3C | |
| 2535 | - | 100 | 36 | 8B13 | - | - | - | - | - | - | 17.4K | 17.4K | 12 | 3/4X3 | |
| 2536 | - | 100 | 36 | 12B19 | - | - | - | - | - | - | 26.5K | 26.5K | - | - | |
| 2537 | 32X4CH | 512 | 36 | - | 4 | 7/8 | 30-1/4 | 5/8 | - | - | 226A | 243A | - | - | |
| 2538 | 32X4CH | 513 | 36 | - | 4 | 7/8 | 30-1/4 | 5/8 | - | - | 243A | 226A | - | - | |
| 2539 | 12X4CH | 505 | 50 | 12CH50.0 | 2-7/8 | 3/4 | - | - | 12FT 3 | 1FT 0 | 440A | 441B | - | - | X |
| 2540 | 12X4CH | 505 | 50 | 12CH50.0 | 2-7/8 | 3/4 | - | - | 12FT 3 | 1FT 0 | 441B | 440A | - | - | |
| 2541 | - | 100 | 36 | 16WF45 | - | - | - | - | - | - | 2050 | 220H | - | - | |
| 2542 | - | 100 | 50 | 12B22 | - | - | - | - | - | - | 26.5K | 26.5K | - | - | |
| 2543 | - | 100 | 50 | 12B22 | - | - | - | - | - | - | 26.5K | 26.5K | - | - | |
| 2544 | - | 100 | 36 | 14B22 | - | - | - | - | - | - | 303B | 26.5K | 10 | 3/4X3B | |
| 2545 | - | 100 | 50 | 12B22 | - | - | - | - | - | - | 26.5K | 26.5K | - | - | |
| 2546 | - | 100 | 50 | 18WF64 | - | - | - | - | - | - | 283C | 472G | - | - | |
| 2547 | - | 100 | 50 | 12B22 | - | - | - | - | - | - | 26.5K | 26.5K | - | - | |
| 2548 | - | 100 | 36 | 12WF27 | - | - | - | - | - | - | 17.7K | 17.7K | - | - | |
| 2549 | - | 100 | 36 | 16WF36 | - | - | - | - | - | - | 170B | 287G | 15 | 3/4X3B | |
| 2550 | - | 100 | 36 | 12WF27 | - | - | - | - | - | - | 348B | 283A | - | - | |
| 2551 | - | 100 | 36 | 16WF45 | - | - | - | - | - | - | 303B | 395C | - | - | |
| 2552 | - | 100 | 36 | 8B13 | - | - | - | - | - | - | 17.4K | 17.4K | - | - | |
| 2553 | - | 404 | 36 | 18WF45 | - | - | - | - | - | - | 26.5K | 274D | 26 | 3/4X3 | |
| 2554 | - | 100 | 36 | 12WF45 | - | - | - | - | - | - | 364A | 364A | - | - | |
| 2555 | - | 404 | 36 | 16WF50 | - | - | - | - | - | - | 26.5K | 278A | 26 | 3/4X3 | |
| 2556 | - | 100 | 36 | 16WF36 | - | - | - | - | - | - | 170B | 287G | 12 | 3/4X3B | |
| 2557 | - | 100 | 36 | 21WF55 | - | - | - | - | - | - | 381A | 317E | 16 | 3/4X3 | |
| 2558 | - | 100 | 36 | 16B26 | - | - | - | - | - | - | 201F | 201F | 8 | 3/4X3 | |
| 2559 | - | 100 | 36 | 24I79.9 | - | - | - | - | - | - | 409A | 409A | - | - | |
| 2560 | - | 100 | 36 | 24I79.9 | - | - | - | - | - | - | 205B | 359A | - | - | |
| 2561 | - | 100 | 50 | 18WF64 | - | - | - | - | - | - | 283B | 359A | - | - | |
| 2562 | - | 100 | 50 | 18WF85 | - | - | - | - | - | - | 472L | 472G | - | - | (1) |
| 2563 | - | 100 | 36 | 14B26 | - | - | - | - | - | - | 310B | 26.5K | 24 | 3/4X3 | |
| 2564 | - | 100 | 50 | 18WF64 | - | - | - | - | - | - | 283C | 472G | - | - | |
| 2565 | - | 100 | 50 | 18WF64 | - | - | - | - | - | - | 283C | 472G | - | - | |
| 2566 | - | 100 | 50 | 18WF70 | - | - | - | - | - | - | 472L | 472G | - | - | (1) |

REMARKS

1 LEFT SUPPORT, REVISION AFTER FABRICATION, TOWER A ONLY. SEE 19-A-910

LICENSED PROFESSIONAL ENGINEER — LESLIE E. ROBERTSON — No. 54360 — UNIVERSITY OF THE STATE OF NEW YORK

5-A81- 77

**SKILLING, HELLE, CHRISTIANSEN, ROBERTSON** — Structural & Civil Engineers

PROJECT: THE WORLD TRADE CENTER | TITLE: BEAM SCHEDULE TOWERS A AND B | DATE: 12/ 6/68

REVISIONS

| BEAM NO. | SIZE | TYPE | FY | SHAPE | PLATE 1 WIDTH | PLATE 1 THICK | PLATE 2 WIDTH | PLATE 2 THICK | DIMENSIONS LENGTH | DIMENSIONS DIM. A | SUPPORTS LEFT | SUPPORTS RIGHT | STUDS NO. | STUDS SIZE | REMARKS |
|---|---|---|---|---|---|---|---|---|---|---|---|---|---|---|---|
| 2567 | 15X3-3/8CH | 504 | 50 | 15CH40.0 | 2-1/2 | 1/2 | - | - | 26FT 0 | 1FT 0 | 243A | 245E | - | - | 1 |
| 2568 | - | 100 | 50 | 18WF64 | - | - | - | - | - | - | 283C | 472G | - | - | |
| 2569 | - | 100 | 50 | 18WF64 | - | - | - | - | - | - | 283B | 472G | - | - | |
| 2570 | - | 100 | 50 | 18WF64 | - | - | - | - | - | - | 472L | 472G | - | - | 3 |
| 2571 | 15X3-3/8CH | 505 | 50 | 15CH40.0 | 2-1/2 | 1/2 | - | - | 26FT 1 | 1FT 1 | 245E | 243A | - | - | 2 |
| 2572 | - | 100 | 50 | 18WF64 | - | - | - | - | - | - | 283C | 472G | - | - | X |
| 2573 | - | 100 | 50 | 18WF64 | - | - | - | - | - | - | 472L | 472G | - | - | 3 |
| 2574 | - | 100 | 36 | 12WF31 | - | - | - | - | - | - | 105L | 201Q | 15 | 3/4X3 | |
| 2575 | - | 100 | 50 | 18WF64 | - | - | - | - | - | - | 283B | 359A | - | - | |
| 2576 | - | 100 | 36 | 21WF55 | - | - | - | - | - | - | 469A | 470A | - | - | |
| 2577 | - | 100 | 36 | 21WF55 | - | - | - | - | - | - | 35.3K | 35.3K | - | - | |
| 2578 | - | 100 | 36 | 21WF62 | - | - | - | - | - | - | 53.0K | 470A | - | - | |
| 2579 | - | 446 | 36 | 24WF84 | - | - | - | - | - | - | 371A | 344A | - | - | |
| 2580 | - | 100 | 36 | 21WF55 | - | - | - | - | - | - | 470A | 469A | - | - | |
| 2581 | - | 100 | 36 | 18WF50 | - | - | - | - | - | - | 220J | 344A | - | - | |
| 2582 | - | 100 | 36 | 18WF60 | - | - | - | - | - | - | 344A | 287H | - | - | |
| 2583 | - | 100 | 36 | 21WF55 | - | - | - | - | - | - | 470A | 53.0K | - | - | |
| 2584 | - | 100 | 36 | 18WF50 | - | - | - | - | - | - | 203A | 344A | - | - | |
| 2585 | - | 100 | 36 | 18WF50 | - | - | - | - | - | - | 344A | 220J | - | - | |
| 2586 | - | 100 | 36 | 18WF45 | - | - | - | - | - | - | 170E | 287H | 15 | 3/4X3B | |
| 2587 | - | 100 | 36 | 21WF62 | - | - | - | - | - | - | 487A | 203A | 8 | 3/4X3B | |
| 2588 | - | 446 | 36 | 24WF84 | - | - | - | - | - | - | 344A | 371A | - | - | |
| 2589 | - | 100 | 36 | 30WF116 | - | - | - | - | - | - | 44.2K | 44.2K | - | - | |
| 2590 | 30X10BU | 300 | 36 | - | 10 | 7/8 | 28-1/4 | 1/2 | - | - | 267A | 283T | - | - | |
| 2591 | - | 100 | 36 | 30WF116 | - | - | - | - | - | - | 44.2K | 44.2K | - | - | |
| 2592 | 30X7 BU | 300 | 36 | - | 7 | 1- 1/2 | 27 | 5/8 | - | - | 306A | 111L | - | - | |
| 2593 | 26X7 BU | 300 | 36 | - | 7 | 1- 1/2 | 23 | 1/2 | - | - | 44.2K | 44.2K | - | - | |
| 2594 | 30X10BU | 300 | 36 | - | 10 | 7/8 | 28-1/4 | 1/2 | - | - | 267A | 283T | - | - | |
| 2595 | - | 100 | 36 | 30WF116 | - | - | - | - | - | - | 44.2K | 44.2K | - | - | |
| 2596 | 30X10BU | 300 | 36 | - | 10 | 7/8 | 28-1/4 | 1/2 | - | - | 267A | 283T | - | - | |
| 2597 | - | 100 | 36 | 30WF116 | - | - | - | - | - | - | 44.2K | 44.2K | - | - | |
| 2598 | 30X7 BU | 300 | 36 | - | 7 | 2 | 26 | 3/4 | - | - | 316B | 309A | - | - | |
| 2599 | - | 100 | 36 | 16WF45 | - | - | - | - | - | - | 220F | 395A | - | - | |

REMARKS

1 DETAIL 442A RIGHT END OF BEAM
2 DETAIL 442A LEFT END OF BEAM
3 LEFT SUPPORT, REVISION AFTER FABRICATION, TOWER A ONLY, SEE 19-A-910

LICENSED PROFESSIONAL ENGINEER ★ LESLIE E. ROBERTSON ★ No. 34360 ★ UNIVERSITY OF THE STATE OF NEW YORK

5-A61- 78

**SKILLING-HELLE-CHRISTIANSEN-ROBERTSON** — **Civil & Structural Engineers**

PROJECT: THE WORLD TRADE CENTER | TITLE: BEAM SCHEDULE TOWERS A AND B | DATE: 07/11/69

REVISIONS

| BEAM NO. | SIZE | TYPE | FY | PLATE 1 SHAPE | PLATE 1 WIDTH | PLATE 1 THICK | PLATE 2 WIDTH | PLATE 2 THICK | DIMENSIONS LENGTH | DIMENSIONS DIM. A | SUPPORTS LEFT | SUPPORTS RIGHT | STUDS NO. | STUDS SIZE | REMARKS |
|---|---|---|---|---|---|---|---|---|---|---|---|---|---|---|---|
| 2600 | 26X7 BU | 300 | 36 | - | 7 | 2- 1/4 | 21-1/2 | 3/4 | - | - | 220P | 309A | - | - | |
| 2601 | - | 100 | 36 | 12WF50 | - | - | - | - | - | - | 283A | 283A | - | - | |
| 2602 | - | 100 | 36 | 8B13 | - | - | - | - | - | - | 17.4K | 514 | - | - | |
| 2603 | - | 100 | 36 | 16WF64 | - | - | - | - | - | - | 106E | 106E | 47 | 3/4X3 | |
| 2604 | - | 100 | 36 | 12WF50 | - | - | - | - | - | - | 445A | 445A | - | - | |
| 2605 | - | 100 | 36 | 12WF72 | - | - | - | - | - | - | 317A | 370F | - | - | |
| 2606 | - | 100 | 36 | 12WF65 | - | - | - | - | - | - | 317A | 317A | - | - | |
| 2607 | - | 100 | 36 | 12WF50 | - | - | - | - | - | - | 445A | 445A | - | - | |
| 2608 | - | 100 | 36 | 12WF72 | - | - | - | - | - | - | 317A | 370F | - | - | |
| 2609 | - | 100 | 36 | 12WF31 | - | - | - | - | - | - | 26.5K | 26.5K | - | - | |
| 2610 | - | 100 | 36 | 12WF36 | - | - | - | - | - | - | 111A | 26.5K | - | - | |
| 2611 | - | 100 | 36 | 12WF31 | - | - | - | - | - | - | 26.5K | 26.5K | - | - | |
| 2612 | - | 100 | 50 | 12WF31 | - | - | - | - | - | - | 283M | 26.5K | - | - | |
| 2613 | - | 100 | 36 | 12WF36 | - | - | - | - | - | - | 283A | 26.5K | - | - | |
| 2614 | - | 100 | 36 | 12WF27 | - | - | - | - | - | - | 283A | 349A | - | - | |
| 2615 | - | 100 | 36 | 12WF27 | - | - | - | - | - | - | 349A | 283A | - | - | |
| 2616 | - | 100 | 36 | 12WF27 | - | - | - | - | - | - | 208A | 111A | - | - | |
| 2617 | - | 100 | 36 | 12WF58 | - | - | - | - | - | - | 111D | 111A | - | - | |
| 2618 | - | 100 | 36 | 12WF53 | - | - | - | - | - | - | 111A | 111C | - | - | |
| 2619 | - | 100 | 36 | 16WF45 | - | - | - | - | - | - | 220A | 220A | - | - | |
| 2620 | - | 100 | 36 | 12WF53 | - | - | - | - | - | - | 111A | 111A | - | - | |
| 2621 | - | 100 | 36 | 12WF53 | - | - | - | - | - | - | 111A | 111A | - | - | |
| 2622 | - | 100 | 36 | 12WF58 | - | - | - | - | - | - | 111A | 111C | - | - | |
| 2623 | - | 100 | 50 | 12WF72 | - | - | - | - | - | - | 111A | 111E | - | - | |
| 2624 | - | 100 | 50 | 12WF72 | - | - | - | - | - | - | 111E | 111E | - | - | |
| 2625 | - | 100 | 50 | 12WF72 | - | - | - | - | - | - | 111A | 111E | - | - | |
| 2626 | - | 100 | 50 | 12WF72 | - | - | - | - | - | - | 111E | 111A | - | - | |
| 2627 | 16X5-1/2BX | 200 | 36 | - | 4 | 3/8 | 16 | 3/4 | - | - | 206A | 265A | - | - | |
| 2628 | - | 100 | 36 | 12WF36 | - | - | - | - | - | - | 350C | 370D | - | - | |
| 2629 | - | 100 | 36 | 8B13 | - | - | - | - | - | - | 17.4K | 17.4K | - | - | |
| 2630 | 16X4 BX | 200 | 36 | - | 2-1/2 | 3/4 | 16 | 3/4 | - | - | 247F | 247E | - | - | |
| 2631 | 16X4 BX | 200 | 36 | - | 2-1/2 | 3/4 | 16 | 3/4 | - | - | 372A | 372A | - | - | |
| 2632 | - | 100 | 50 | 12WF27 | - | - | - | - | - | - | 26.5K | 208E | - | - | |
| 2633 | - | 100 | 36 | 12WF27 | - | - | - | - | - | - | 111H | 111H | - | - | |

LICENSED PROFESSIONAL ENGINEER — LESLIE E. ROBERTSON — No. 34360 — UNIVERSITY OF THE STATE OF NEW YORK

5-A21- 79

**SKILLING-HELLE-CHRISTIANSEN-ROBERTSON** — **Civil & Structural Engineers**

PROJECT: THE WORLD TRADE CENTER | TITLE: BEAM SCHEDULE TOWERS A AND B | DATE: 1/22/68

REVISIONS

| BEAM NO. | SIZE | TYPE | FY | PLATE 1 SHAPE | PLATE 1 WIDTH | PLATE 1 THICK | PLATE 2 WIDTH | PLATE 2 THICK | DIMENSIONS LENGTH | DIMENSIONS DIM. A | SUPPORTS LEFT | SUPPORTS RIGHT | STUDS NO. | STUDS SIZE | REMARKS |
|---|---|---|---|---|---|---|---|---|---|---|---|---|---|---|---|
| 2634 | - | 100 | 36 | 16826 | - | - | - | - | - | - | 283M | 283M | - | - | |
| 2635 | - | 100 | 36 | 12WF72 | - | - | - | - | - | - | 370F | 317A | - | - | |
| 2636 | - | 100 | 36 | 21WF55 | - | - | - | - | - | - | 317E | 317E | 20 | 3/4X3 | |
| 2637 | - | 100 | 36 | 12WF72 | - | - | - | - | - | - | 370F | 317A | - | - | |
| 2638 | - | 100 | 36 | 12WF50 | - | - | - | - | - | - | 445A | 445A | - | - | |
| 2639 | - | 100 | 50 | 12WF72 | - | - | - | - | - | - | 220H | 287F | - | - | X |
| 2640 | - | 100 | 50 | 12WF72 | - | - | - | - | - | - | 287F | 287F | - | - | |
| 2641 | - | 100 | 36 | 12WF36 | - | - | - | - | - | - | 287C | 287D | - | - | |
| 2642 | - | 100 | 36 | 12WF27 | - | - | - | - | - | - | 287D | 287B | - | - | |
| 2643 | - | 100 | 50 | 12WF72 | - | - | - | - | - | - | 287D | 287F | - | - | |
| 2644 | - | 100 | 50 | 12WF72 | - | - | - | - | - | - | 287F | 220H | - | - | |
| 2645 | - | 100 | 36 | 8B13 | - | - | - | - | - | - | 260C | 111H | - | - | |
| 2646 | - | 100 | 50 | 8B13 | - | - | - | - | - | - | 17.4K | 17.4K | - | - | |
| 2647 | - | 100 | 36 | 12WF27 | - | - | - | - | - | - | 208E | 350C | - | - | |
| 2648 | - | 100 | 36 | 12WF31 | - | - | - | - | - | - | 217A | 350C | - | - | |
| 2649 | - | 100 | 36 | 8B13 | - | - | - | - | - | - | 28.4K | 28.9K | - | - | |
| 2650 | - | 100 | 36 | 12WF36 | - | - | - | - | - | - | 370D | 235E | - | - | |
| 2651 | - | 100 | 36 | 14B22 | - | - | - | - | - | - | 26.5K | 26.5K | - | - | |
| 2652 | 16X5-1/2BX | 200 | 36 | - | 4 | 3/8 | 16 | 3/4 | - | - | 265A | 247E | - | - | |
| 2653 | - | 100 | 36 | 14B22 | - | - | - | - | - | - | 26.5K | 26.5K | - | - | |
| 2654 | - | 100 | 36 | 9CH13.4 | - | - | - | - | - | - | 517 | 501 | - | - | |
| 2655 | - | 100 | 36 | 12WF50 | - | - | - | - | - | - | 307A | 287D | - | - | |
| 2656 | - | 100 | 36 | 8B13 | - | - | - | - | - | - | 17.4K | 17.4K | - | - | |
| 2657 | - | 100 | 36 | 9CH13.4 | - | - | - | - | - | - | 501 | 501 | - | - | |
| 2658 | - | 100 | 36 | 12WF27 | - | - | - | - | - | - | 334A | 349A | - | - | |
| 2659 | - | 100 | 36 | 12WF27 | - | - | - | - | - | - | 349A | 348A | - | - | |
| 2660 | - | 100 | 36 | 16B31 | - | - | - | - | - | - | 348A | 220A | - | - | |
| 2661 | - | 100 | 36 | 12WF27 | - | - | - | - | - | - | 220A | 349A | - | - | |
| 2662 | - | 100 | 36 | 12WF27 | - | - | - | - | - | - | 349A | 349A | - | - | |
| 2663 | - | 100 | 36 | 12WF27 | - | - | - | - | - | - | 349A | 334B | - | - | |
| 2664 | - | 100 | 36 | 12WF27 | - | - | - | - | - | - | 334A | 349A | - | - | |
| 2665 | - | 100 | 36 | 12WF27 | - | - | - | - | - | - | 349A | 348A | - | - | |
| 2666 | - | 100 | 36 | 16B31 | - | - | - | - | - | - | 348A | 220A | - | - | |

LICENSED PROFESSIONAL ENGINEER — LESLIE E. ROBERTSON — No. 34360 — UNIVERSITY OF THE STATE OF N.Y.

5-AB1- 80

**SKILLING-HELLE-CHRISTIANSEN-ROBERTSON** — **Civil & Structural Engineers**

PROJECT: THE WORLD TRADE CENTER | TITLE: BEAM SCHEDULE TOWERS A AND B | DATE: 1/22/68

REVISIONS

| BEAM NO. | SIZE | TYPE | FY | PLATE 1 SHAPE | PLATE 1 WIDTH | PLATE 1 THICK | PLATE 2 WIDTH | PLATE 2 THICK | DIMENSIONS LENGTH | DIMENSIONS DIM. A | SUPPORTS LEFT | SUPPORTS RIGHT | STUDS NO. | STUDS SIZE | REMARKS |
|---|---|---|---|---|---|---|---|---|---|---|---|---|---|---|---|
| 2667 | 16X6-1/2BU | 300 | 36 | - | 6-1/2 | 1- 1/8 | 13-3/4 | 3/8 | - | - | 220A | 348B | - | - | |
| 2668 | - | 100 | 36 | 12WF27 | - | - | - | - | - | - | 348B | 349A | - | - | |
| 2669 | - | 100 | 36 | 16WF45 | - | - | - | - | - | - | 220H | 205C | - | - | |
| 2670 | - | 100 | 36 | 16WF40 | - | - | - | - | - | - | 401B | 401B | - | - | |
| 2671 | - | 100 | 36 | 16WF45 | - | - | - | - | - | - | 205C | 310D | - | - | |
| 2672 | - | 100 | 36 | 16WF45 | - | - | - | - | - | - | 307E | 310D | - | - | |
| 2673 | - | 100 | 36 | 16WF40 | - | - | - | - | - | - | 401B | 401B | - | - | |
| 2674 | - | 100 | 36 | 16WF45 | - | - | - | - | - | - | 205C | 220H | - | - | |
| 2675 | - | 100 | 36 | 12WF72 | - | - | - | - | - | - | 220H | 205E | - | - | |
| 2676 | - | 100 | 36 | 12WF65 | - | - | - | - | - | - | 445A | 445A | - | - | |
| 2677 | - | 100 | 36 | 12WF72 | - | - | - | - | - | - | 205E | 364B | - | - | |
| 2678 | - | 100 | 36 | 12WF72 | - | - | - | - | - | - | 364B | 205E | - | - | |
| 2679 | - | 100 | 36 | 12WF65 | - | - | - | - | - | - | 445A | 445A | - | - | |
| 2680 | - | 100 | 36 | 12WF72 | - | - | - | - | - | - | 205E | 220H | - | - | |
| 2681 | - | 100 | 36 | 16B31 | - | - | - | - | - | - | 265A | 220E | - | - | |
| 2682 | 16X5-1/2BX | 200 | 36 | - | 4 | 3/8 | 16 | 3/4 | - | - | 265A | 206A | - | - | |
| 2683 | - | 100 | 36 | 12WF36 | - | - | - | - | - | - | 222A | 370A | - | - | |
| 2684 | - | 100 | 36 | 12WF36 | - | - | - | - | - | - | 222B | 370A | - | - | |
| 2685 | - | 100 | 36 | 12WF31 | - | - | - | - | - | - | 26.5K | 222B | - | - | |
| 2686 | - | 100 | 36 | 12WF27 | - | - | - | - | - | - | 201 | 111 | - | - | |
| 2687 | - | 100 | 36 | 8B13 | - | - | - | - | - | - | 17.4K | 17.4K | - | - | |
| 2688 | - | 100 | 36 | 12WF27 | - | - | - | - | - | - | 222A | 222B | - | - | |
| 2689 | - | 100 | 36 | 12WF40 | - | - | - | - | - | - | 310A | 26.5K | - | - | |
| 2690 | - | 100 | 36 | 12WF50 | - | - | - | - | - | - | 283F | 283F | - | - | |
| 2691 | - | 445 | 36 | 18WF45 | - | - | - | - | - | - | 472E | 472F | - | - | |
| 2692 | - | 100 | 36 | 18WF50 | - | - | - | - | - | - | 472C | 472D | - | - | |
| 2693 | - | 100 | 36 | 12B22 | - | - | - | - | - | - | 26.5K | 26.5K | - | - | |
| 2694 | - | 100 | 36 | 12B22 | - | - | - | - | - | - | 283I | 283I | - | - | |
| 2695 | - | 100 | 36 | 12WF50 | - | - | - | - | - | - | 111A | 357A | - | - | |
| 2696 | - | 100 | 36 | 12WF27 | - | - | - | - | - | - | 26.5K | 208A | - | - | |
| 2697 | - | 100 | 36 | 12WF27 | - | - | - | - | - | - | 111B | 111A | - | - | |
| 2698 | - | 100 | 36 | 12B19 | - | - | - | - | - | - | 283I | 283I | - | - | |
| 2699 | - | 100 | 36 | 12WF36 | - | - | - | - | - | - | 370A | 235A | - | - | |

LICENSED PROFESSIONAL ENGINEER — LESLIE E. ROBERTSON — No. 34360 — UNIVERSITY OF THE STATE OF NEW YORK

5-481- 41

**SKILLING-HELLE-CHRISTIANSEN-ROBERTSON** — **Civil & Structural Engineers**

| PROJECT | TITLE | DATE |
|---|---|---|
| THE WORLD TRADE CENTER | BEAM SCHEDULE TOWERS A AND B | 1/22/68 |

REVISIONS

| BEAM NO. | SIZE | TYPE | FY | PLATE 1 SHAPE | PLATE 1 WIDTH | PLATE 1 THICK | PLATE 2 WIDTH | PLATE 2 THICK | DIMENSIONS LENGTH | DIMENSIONS DIM. A | SUPPORTS LEFT | SUPPORTS RIGHT | STUDS NO. | STUDS SIZE | REMARKS |
|---|---|---|---|---|---|---|---|---|---|---|---|---|---|---|---|
| 2700 | - | 100 | 36 | 12WF27 | - | - | - | - | - | - | 283A | 348A | - | - | |
| 2701 | - | 100 | 36 | 8B13 | - | - | - | - | - | - | 17.4K | 17.4K | - | - | |
| 2702 | - | 100 | 36 | 12WF27 | - | - | - | - | - | - | 26.5K | 26.5K | - | - | |
| 2703 | - | 100 | 36 | 12WF36 | - | - | - | - | - | - | 26.5K | 26.5K | - | - | |
| 2704 | - | 100 | 36 | 12B22 | - | - | - | - | - | - | 26.5K | 26.5K | - | - | |
| 2705 | - | 100 | 36 | 12WF27 | - | - | - | - | - | - | 348A | 111B | - | - | |
| 2706 | - | 100 | 36 | 18WF60 | - | - | - | - | - | - | 370C | 235B | - | - | |
| 2707 | - | 100 | 36 | 10WF21 | - | - | - | - | - | - | 436A | 436A | - | - | |
| 2708 | - | 100 | 36 | 16WF40 | - | - | - | - | - | - | 283C | 283C | - | - | |
| 2709 | - | 100 | 36 | 12WF27 | - | - | - | - | - | - | 349A | 334B | - | - | |
| 2710 | - | 100 | 36 | 12WF27 | - | - | - | - | - | - | 208E | 217A | - | - | |
| 2711 | - | 100 | 50 | 12WF79 | - | - | - | - | - | - | 111D | 111B | - | - | |
| 2712 | - | 100 | 50 | 12WF79 | - | - | - | - | - | - | 111B | 111D | - | - | |
| 2713 | - | 100 | 50 | 12WF79 | - | - | - | - | - | - | 111B | 111B | - | - | |
| 2714 | - | 100 | 50 | 12WF79 | - | - | - | - | - | - | 111B | 111B | - | - | |
| 2715 | - | 100 | 50 | 12WF79 | - | - | - | - | - | - | 70.0K | 287A | - | - | |
| 2716 | - | 100 | 50 | 12WF79 | - | - | - | - | - | - | 287A | 287C | - | - | |
| 2717 | - | 100 | 50 | 12WF79 | - | - | - | - | - | - | 287B | 287A | - | - | |
| 2718 | - | 100 | 50 | 12WF79 | - | - | - | - | - | - | 287A | 60.0K | - | - | |
| 2719 | - | 100 | 36 | 12WF53 | - | - | - | - | - | - | 111C | 111A | - | - | |
| 2720 | - | 100 | 36 | 12WF58 | - | - | - | - | - | - | 111A | 111C | - | - | |
| 2721 | - | 100 | 36 | 16WF45 | - | - | - | - | - | - | 220A | 310A | - | - | |
| 2722 | - | 100 | 36 | 18WF50 | - | - | - | - | - | - | 307A | 220B | - | - | |
| 2723 | - | 100 | 36 | 12WF58 | - | - | - | - | - | - | 111A | 111A | - | - | |
| 2724 | - | 100 | 36 | 12WF53 | - | - | - | - | - | - | 111A | 111A | - | - | |
| 2725 | - | 100 | 36 | 12WF79 | - | - | - | - | - | - | 26.5K | 287A | - | - | |
| 2726 | - | 100 | 36 | 12WF58 | - | - | - | - | - | - | 170A | 287C | - | - | |
| 2727 | - | 100 | 36 | 12WF53 | - | - | - | - | - | - | 26.5K | 287B | - | - | |
| 2728 | - | 100 | 36 | 12WF79 | - | - | - | - | - | - | 26.5K | 287A | - | - | |
| 2729 | - | 100 | 36 | 12WF50 | - | - | - | - | - | - | 334A | 353B | - | - | |
| 2730 | - | 100 | 36 | 12WF58 | - | - | - | - | - | - | 353B | 353C | - | - | |
| 2731 | 18X4 8U | 300 | 36 | - | 4 | 1- 1/4 | 15-1/2 | 3/8 | - | - | 29.7K | 31.9K | - | - | |
| 2732 | - | 100 | 36 | 12WF58 | - | - | - | - | - | - | 353F | 353B | - | - | |
| 2733 | - | 100 | 36 | 12WF50 | - | - | - | - | - | - | 353B | 334A | - | - | |

X

LICENSED PROFESSIONAL ENGINEER — LESLIE E. ROBERTSON — No. 34360 — UNIVERSITY OF THE STATE OF NEW YORK

S-A81- 52

**SKILLING-HELLE-CHRISTIANSEN-ROBERTSON** — **Civil & Structural Engineers**

| PROJECT | TITLE | DATE |
|---|---|---|
| THE WORLD TRADE CENTER | BEAM SCHEDULE TOWERS A AND B | 1/22/68 |

REVISIONS

| BEAM NO. | SIZE | TYPE | FY | SHAPE | PLATE 1 WIDTH | PLATE 1 THICK | PLATE 2 WIDTH | PLATE 2 THICK | DIMENSIONS LENGTH | DIMENSIONS DIM. A | SUPPORTS LEFT | SUPPORTS RIGHT | STUDS NO. | STUDS SIZE | REMARKS |
|---|---|---|---|---|---|---|---|---|---|---|---|---|---|---|---|
| 2734 | - | 100 | 36 | 12WF50 | - | - | - | - | - | - | 334B | 353A | - | - | |
| 2735 | - | 100 | 36 | 12WF58 | - | - | - | - | - | - | 353E | 353G | - | - | |
| 2736 | - | 100 | 36 | 18WF50 | - | - | - | - | - | - | 472C | 472D | - | - | |
| 2737 | - | 100 | 36 | 12WF58 | - | - | - | - | - | - | 353A | 353B | - | - | |
| 2738 | - | 100 | 36 | 12WF50 | - | - | - | - | - | - | 353B | 334B | - | - | |
| 2739 | - | 100 | 36 | 12WF79 | - | - | - | - | - | - | 338C | 329A | - | - | |
| 2740 | - | 100 | 36 | 12WF65 | - | - | - | - | - | - | 445A | 445A | - | - | |
| 2741 | - | 100 | 36 | 12WF79 | - | - | - | - | - | - | 329A | 364A | - | - | |
| 2742 | - | 100 | 36 | 12WF79 | - | - | - | - | - | - | 364A | 329A | - | - | |
| 2743 | - | 100 | 36 | 12WF65 | - | - | - | - | - | - | 445A | 445A | - | - | |
| 2744 | - | 100 | 36 | 12WF79 | - | - | - | - | - | - | 329A | 338C | - | - | |
| 2745 | - | 100 | 36 | 12WF79 | - | - | - | - | - | - | 338C | 329A | - | - | |
| 2746 | - | 100 | 36 | 12WF65 | - | - | - | - | - | - | 445A | 445A | - | - | |
| 2747 | - | 100 | 36 | 12WF79 | - | - | - | - | - | - | 329A | 364B | - | - | |
| 2748 | - | 100 | 36 | 12WF79 | - | - | - | - | - | - | 364B | 329A | - | - | |
| 2749 | - | 100 | 36 | 12WF65 | - | - | - | - | - | - | 445A | 445A | - | - | |
| 2750 | - | 100 | 36 | 12WF79 | - | - | - | - | - | - | 329A | 338C | - | - | |
| 2751 | - | 100 | 36 | 18WF45 | - | - | - | - | - | - | 472B | 472A | - | - | |
| 2752 | - | 100 | 36 | 8B13 | - | - | - | - | - | - | 17.4K | 17.4K | - | - | |
| 2753 | - | 100 | 36 | 12WF36 | - | - | - | - | - | - | 283B | 170A | - | - | |
| 2754 | - | 100 | 36 | 12WF79 | - | - | - | - | - | - | 208A | 222A | - | - | |
| 2755 | - | 100 | 36 | 8B13 | - | - | - | - | - | - | 508 | 17.4K | - | - | |
| 2756 | - | 100 | 36 | 8B13 | - | - | - | - | - | - | 172C | 17.4K | - | - | |
| 2757 | - | 100 | 36 | 8B13 | - | - | - | - | - | - | 17.4K | 17.4K | 12 | 3/4X3 | |
| 2758 | - | 100 | 36 | 8B13 | - | - | - | - | - | - | 172 | 17.4K | 12 | 3/4X3 | |
| 2759 | 16X5-1/2BX | 280 | 36 | - | 4 | 3/8 | 16 | 3/4 | - | - | 450 | 450 | - | - | |
| 2760 | 16X5-1/2BX | 202 | 36 | - | 4 | 3/8 | 16 | 3/4 | - | - | 450 | 450 | - | - | |
| 2761 | - | 100 | 50 | 14B22 | - | - | - | - | - | - | 235C | 219A | 34 | 3/4X3 | |
| 2762 | - | 100 | 50 | 14B22 | - | - | - | - | - | - | 235E | 218B | 34 | 3/4X3 | |
| 2763 | - | 100 | 50 | 14B22 | - | - | - | - | - | - | 26.5K | 26.5K | - | - | |
| 2764 | - | 100 | 50 | 12B19 | - | - | - | - | - | - | 26.5K | 26.5K | - | - | |
| 2765 | - | 100 | 50 | 14B22 | - | - | - | - | - | - | 26.5K | 26.5K | - | - | |
| 2766 | - | 100 | 36 | 16B31 | - | - | - | - | - | - | 220L | 294D | - | - | |

LICENSED PROFESSIONAL ENGINEER LESLIE E. ROBERTSON NO. 34360 UNIVERSITY OF THE STATE OF NEW YORK

**SKILLING-HELLE-CHRISTIANSEN-ROBERTSON** — **Civil & Structural Engineers**

PROJECT: THE WORLD TRADE CENTER | TITLE: BEAM SCHEDULE TOWERS A AND B | DATE: 1/22/68

REVISIONS

| BEAM NO. | SIZE | TYPE | FY | SHAPE | PLATE 1 WIDTH | PLATE 1 THICK | PLATE 2 WIDTH | PLATE 2 THICK | DIMENSIONS LENGTH | DIMENSIONS DIM. A | SUPPORTS LEFT | SUPPORTS RIGHT | STUDS NO. | STUDS SIZE | REMARKS |
|---|---|---|---|---|---|---|---|---|---|---|---|---|---|---|---|
| 2767 | - | 100 | 36 | 16B31 | - | - | - | - | - | - | 294D | 294D | - | - | |
| 2768 | - | 100 | 36 | 16B31 | - | - | - | - | - | - | 463C | 294D | - | - | |
| 2769 | - | 100 | 36 | 16B31 | - | - | - | - | - | - | 294D | 294D | - | - | |
| 2770 | - | 100 | 36 | 16B31 | - | - | - | - | - | - | 294D | 220L | - | - | |
| 2771 | - | 100 | 36 | 16B31 | - | - | - | - | - | - | 26.5K | 294D | - | - | |
| 2772 | - | 100 | 36 | 16B31 | - | - | - | - | - | - | 294D | 26.5K | - | - | |
| 2773 | - | 100 | 36 | 16B31 | - | - | - | - | - | - | 26.5K | 26.5K | - | - | |
| 2774 | - | 100 | 36 | 16B31 | - | - | - | - | - | - | 26.5K | 26.5K | 30 | 3/4X3 | |
| 2775 | - | 100 | 36 | 16B31 | - | - | - | - | - | - | 294D | 463C | - | - | |
| 2776 | - | 100 | 50 | 16B26 | - | - | - | - | - | - | 283U | 105L | 15 | 3/4X3 | |
| 2777 | - | 100 | 50 | 16B31 | - | - | - | - | - | - | 283U | 105L | 15 | 3/4X3 | |
| 2778 | 16X5-1/2BX | 202 | 36 | - | 4 | 1/4 | 16 | 3/4 | - | - | 294D | 247G | - | - | |
| 2779 | - | 100 | 50 | 16B26 | - | - | - | - | - | - | 26.5K | 26.5K | - | - | |
| 2780 | - | 100 | 50 | 16B26 | - | - | - | - | - | - | 26.5K | 26.5K | - | - | |
| 2781 | - | 100 | 50 | 16B26 | - | - | - | - | - | - | 26.5K | 26.5K | - | - | |
| 2782 | - | 100 | 50 | 16B26 | - | - | - | - | - | - | 283U | 105L | 10 | 3/4X3 | |
| 2783 | 16X5-1/2BX | 200 | 36 | - | 4 | 1/4 | 16 | 3/4 | - | - | 206A | 294D | - | - | |
| 2784 | - | 100 | 50 | 16B26 | - | - | - | - | - | - | 26.5K | 26.5K | 20 | 3/4X3 | |
| 2785 | - | 100 | 36 | 14B22 | - | - | - | - | - | - | 26.5K | 26.5K | - | - | |
| 2786 | - | 100 | 50 | 14B22 | - | - | - | - | - | - | 26.5K | 26.5K | - | - | |
| 2787 | - | 100 | 36 | 14B22 | - | - | - | - | - | - | 26.5K | 26.5K | 15 | 3/4X3B | |
| 2788 | 20X7 8U | 300 | 36 | - | 7 | 3/4 | 18-1/2 | 1/4 | - | - | 338G | 310G | - | - | |
| 2789 | - | 100 | 50 | 14B22 | - | - | - | - | - | - | 310G | 26.5K | 16 | 3/4X3 | |
| 2790 | - | 100 | 50 | 14B22 | - | - | - | - | - | - | 26.5K | 26.5K | 34 | 3/4X3 | |
| 2791 | - | 100 | 50 | 16B26 | - | - | - | - | - | - | 26.5K | 26.5K | 24 | 3/4X3 | |
| 2792 | - | 100 | 50 | 16WF36 | - | - | - | - | - | - | 105L | 26.5K | 34 | 3/4X3 | |
| 2793 | - | 100 | 50 | 16B26 | - | - | - | - | - | - | 26.5K | 26.5K | 34 | 3/4X3 | |
| 2794 | - | 100 | 50 | 16B26 | - | - | - | - | - | - | 26.5K | 105L | 40 | 3/4X3 | |
| 2795 | - | 100 | 50 | 16B26 | - | - | - | - | - | - | 26.5K | 26.5K | 34 | 3/4X3 | |
| 2796 | - | 100 | 36 | 8B13 | - | - | - | - | - | - | 17.4K | 17.4K | - | - | |
| 2798 | - | 100 | 36 | 14B22 | - | - | - | - | - | - | 105L | 26.5K | - | - | |
| 2799 | - | 100 | 36 | 12B16.5 | - | - | - | - | - | - | 501A | 26.5K | - | - | |

LICENSED PROFESSIONAL ENGINEER — LESLIE E. ROBERTSON — No. 34360 — UNIVERSITY OF THE STATE OF NEW YORK

**SKILLING-HELLE-CHRISTIANSEN-ROBERTSON** — **Civil & Structural Engineers**

PROJECT: THE WORLD TRADE CENTER | TITLE: BEAM SCHEDULE TOWERS A AND B | DATE: 1/22/68

REVISIONS

| BEAM NO. | SIZE | TYPE | FY | PLATE 1 SHAPE | PLATE 1 WIDTH | PLATE 1 THICK | PLATE 2 WIDTH | PLATE 2 THICK | DIMENSIONS LENGTH | DIMENSIONS DIM. A | SUPPORTS LEFT | SUPPORTS RIGHT | STUDS NO. | STUDS SIZE | REMARKS |
|---|---|---|---|---|---|---|---|---|---|---|---|---|---|---|---|
| 2800 | - | 100 | 36 | 16WF36 | - | - | - | - | - | - | 220I | 364C | - | - | |
| 2801 | - | 100 | 36 | 16WF36 | - | - | - | - | - | - | 364C | 220I | - | - | |
| 2802 | - | 100 | 36 | 8B13 | - | - | - | - | - | - | 105H | 105H | 12 | 3/4X3 | |
| 2803 | - | 100 | 50 | 18WF50 | - | - | - | - | - | - | 111J | 106G | 58 | 3/4X3 | |
| 2804 | - | 100 | 50 | 16WF40 | - | - | - | - | - | - | 106J | 106J | 62 | 3/4X3 | |
| 2805 | - | 100 | 50 | 14B22 | - | - | - | - | - | - | 105L | 26.5K | 20 | 3/4X3 | |
| 2806 | - | 100 | 50 | 16B26 | - | - | - | - | - | - | 26.5K | 26.5K | 40 | 3/4X3 | |
| 2807 | - | 100 | 36 | 16B26 | - | - | - | - | - | - | 283M | 170C | - | - | |
| 2808 | - | 100 | 50 | 12B16.5 | - | - | - | - | - | - | 26.5K | 26.5K | 10 | 3/4X3 | |
| 2809 | - | 404 | 36 | 18WF50 | - | - | - | - | - | - | 26.5K | 282A | 26 | 3/4X3 | |
| 2810 | - | 100 | 50 | 18WF45 | - | - | - | - | - | - | 26.5K | 286B | 49 | 3/4X3 | |
| 2811 | - | 100 | 36 | 21WF55 | - | - | - | - | - | - | 35.3K | 105N | 8 | 3/4X3 | |
| 2812 | - | 100 | 36 | 14B22 | - | - | - | - | - | - | 26.5K | 26.5K | - | - | |
| 2813 | - | 100 | 36 | 12B16.5 | - | - | - | - | - | - | 175A | 26.5K | 11 | 3/4X3 | |
| 2814 | - | 100 | 36 | 18WF45 | - | - | - | - | - | - | 111M | 111M | 10 | 3/4X3 | |
| 2815 | 18X4 BX | 200 | 36 | - | 2-1/2 | 3/8 | 18 | 3/4 | - | - | 372A | 282A | - | - | |
| 2816 | - | 100 | 50 | 16B26 | - | - | - | - | - | - | 26.5K | 26.5K | 40 | 3/4X3 | |
| 2817 | - | 100 | 50 | 18WF60 | - | - | - | - | - | - | 111S | 106I | - | - | |
| 2818 | - | 100 | 50 | 14B22 | - | - | - | - | - | - | 208B | 335D | 34 | 3/4X3 | |
| 2819 | - | 100 | 50 | 14B22 | - | - | - | - | - | - | 216A | 335D | 34 | 3/4X3 | |
| 2820 | - | 100 | 36 | 14B22 | - | - | - | - | - | - | 26.5K | 208B | 9 | 3/4X3 | |
| 2821 | - | 100 | 36 | 8B13 | - | - | - | - | - | - | 105D | 105D | 12 | 3/4X3 | |
| 2822 | - | 100 | 36 | 12B16.5 | - | - | - | - | - | - | 360A | 215A | - | - | |
| 2823 | - | 100 | 36 | 16B26 | - | - | - | - | - | - | 201F | 201F | 9 | 3/4X3 | |
| 2824 | - | 100 | 36 | 16WF40 | - | - | - | - | - | - | 111M | 106E | 38 | 3/4X3 | |
| 2825 | - | 100 | 36 | 16WF40 | - | - | - | - | - | - | 106E | 106E | 8 | 3/4X3C | |
| 2826 | - | 100 | 36 | 16WF40 | - | - | - | - | - | - | 106J | 106J | 39 | 3/4X3 | |
| 2827 | - | 100 | 36 | 8B13 | - | - | - | - | - | - | 111N | 105C | - | - | |
| 2828 | - | 100 | 36 | 14B22 | - | - | - | - | - | - | 208B | 216A | 8 | 3/4X3 | |
| 2829 | - | 100 | 36 | 16WF36 | - | - | - | - | - | - | 292A | 295A | 8 | 3/4X3 | |
| 2830 | - | 100 | 50 | 21WF55 | - | - | - | - | - | - | 106G | 106G | 72 | 3/4X3 | |
| 2831 | - | 100 | 50 | 21WF62 | - | - | - | - | - | - | 106G | 111J | 72 | 3/4X3 | |
| 2832 | - | 100 | 50 | 16B26 | - | - | - | - | - | - | 201F | 170C | 40 | 3/4X3 | |
| 2833 | - | 100 | 50 | 16B26 | - | - | - | - | - | - | 26.5K | 26.5K | 40 | 3/4X3 | |

LESLIE E. ROBERTSON — LICENSED PROFESSIONAL ENGINEER — No. 34360 — STATE OF NEW YORK

**SKILLING, HELLE, CHRISTIANSEN, ROBERTSON** — Structural & Civil Engineers

PROJECT: THE WORLD TRADE CENTER | TITLE: BEAM SCHEDULE TOWERS A AND B | DATE: 12/ 6/68

REVISIONS

| BEAM NO. | SIZE | TYPE | FY | SHAPE | PLATE 1 WIDTH | PLATE 1 THICK | PLATE 2 WIDTH | PLATE 2 THICK | DIMENSIONS LENGTH | DIMENSIONS DIM. A | SUPPORTS LEFT | SUPPORTS RIGHT | STUDS NO. | STUDS SIZE | REMARKS |
|---|---|---|---|---|---|---|---|---|---|---|---|---|---|---|---|
| 2834 | - | 100 | 50 | 16B26 | - | - | - | - | - | - | 105L | 26.5K | 40 | 3/4X3 | |
| 2835 | - | 100 | 50 | 16B26 | - | - | - | - | - | - | 26.5K | 26.5K | 24 | 3/4X3 | |
| 2836 | - | 100 | 50 | 21WF55 | - | - | - | - | - | - | 106G | 106G | 70 | 3/4X3 | |
| 2837 | - | 100 | 50 | 21WF55 | - | - | - | - | - | - | 106G | 111J | 70 | 3/4X3 | |
| 2838 | - | 100 | 36 | 12B16.5 | - | - | - | - | - | - | 105L | 105L | - | - | |
| 2839 | - | 100 | 50 | 16WF36 | - | - | - | - | - | - | 218B | 26.5K | 16 | 3/4X3 | X |
| 2840 | 20X7 BU | 300 | 36 | - | 7 | 1 | 18 | 3/8 | - | - | 220Q | 205M | - | - | |
| 2841 | 20X7 BU | 300 | 36 | - | 7 | 1 | 18 | 3/8 | - | - | 408A | 408A | - | - | |
| 2842 | 20X7 BU | 300 | 36 | - | 7 | 1 | 18 | 3/8 | - | - | 205M | 335D | - | - | 3 |
| 2843 | 20X7 BU | 300 | 36 | - | 7 | 1 | 18 | 3/8 | - | - | 335D | 205N | - | - | 4 |
| 2844 | 20X7 BU | 300 | 36 | - | 7 | 1 | 18 | 3/8 | - | - | 408A | 408A | - | - | |
| 2845 | 20X7 BU | 300 | 36 | - | 7 | 1 | 18 | 3/8 | - | - | 205M | 220Q | - | - | |
| 2846 | - | 100 | 36 | 24WF76 | - | - | - | - | - | - | 320A | 313B | 26 | 3/4X3 | |
| 2847 | - | 100 | 36 | 18WF60 | - | - | - | - | - | - | 419A | 414B | 18 | 3/4X3 | |
| 2848 | - | 100 | 36 | 18WF60 | - | - | - | - | - | - | 414B | 419A | 18 | 3/4X3 | |
| 2849 | - | 100 | 36 | 30WF116 | - | - | - | - | - | - | 317E | 318A | 28 | 3/4X3 | |
| 2850 | - | 100 | 36 | 24WF76 | - | - | - | - | - | - | 320A | 313B | 26 | 3/4X3 | |
| 2851 | - | 100 | 36 | 18WF60 | - | - | - | - | - | - | 419A | 414B | 18 | 3/4X3 | |
| 2852 | - | 100 | 36 | 18WF60 | - | - | - | - | - | - | 414B | 419A | 18 | 3/4X3 | |
| 2853 | - | 100 | 36 | 30WF116 | - | - | - | - | - | - | 317E | 318A | 28 | 3/4X3 | |
| 2854 | - | 100 | 36 | 27WF84 | - | - | - | - | - | - | 318A | 251G | 30 | 3/4X3 | |
| 2855 | - | 100 | 36 | 27WF84 | - | - | - | - | - | - | 430A | 430A | 18 | 3/4X3 | |
| 2856 | - | 100 | 36 | 27WF84 | - | - | - | - | - | - | 251G | 482B | 30 | 3/4X3 | |
| 2857 | - | 100 | 36 | 24WF84 | - | - | - | - | - | - | 482B | 482B | 10 | 3/4X3 | |
| 2858 | - | 100 | 36 | 27WF84 | - | - | - | - | - | - | 482B | 251G | 30 | 3/4X3 | |
| 2859 | - | 100 | 36 | 27WF84 | - | - | - | - | - | - | 430A | 430A | 18 | 3/4X3 | |
| 2860 | - | 100 | 36 | 27WF84 | - | - | - | - | - | - | 251G | 318A | 30 | 3/4X3 | |
| 2861 | - | 100 | 36 | 27WF84 | - | - | - | - | - | - | 320A | 205Q | 30 | 3/4X3 | |
| 2862 | - | 100 | 36 | 27WF84 | - | - | - | - | - | - | 430A | 430A | 18 | 3/4X3 | |
| 2863 | - | 434 | 36 | 27WF84 | - | - | - | - | - | - | 205Q | 335L | 34 | 3/4X3 | |
| * 2864 | - | 100 | 36 | 15CH33.9 | - | - | - | - | - | - | 26.5K | 26.5K | - | - | |
| 2865 | - | 100 | 36 | 27WF84 | - | - | - | - | - | - | 335L | 205Q | 34 | 3/4X3 | |
| 2866 | - | 100 | 36 | 27WF84 | - | - | - | - | - | - | 430A | 430A | 18 | 3/4X3 | |

REMARKS

1 DETAIL 430A RIGHT END OF BEAM
2 DETAIL 430A LEFT END OF BEAM
3 DETAIL 408A RIGHT END OF BEAM
4 DETAIL 408A LEFT END OF BEAM

HOLD

LICENSED PROFESSIONAL ENGINEER ☆ LESLIE E. ROBERTSON ☆ No. 34300 ☆ UNIVERSITY OF THE STATE OF NEW YORK

5-AB1- 86

**SKILLING-HELLE-CHRISTIANSEN-ROBERTSON** — **Civil & Structural Engineers**

PROJECT: THE WORLD TRADE CENTER | TITLE: BEAM SCHEDULE TOWERS A AND B | DATE: 1/22/68

REVISIONS

| BEAM NO. | SIZE | TYPE | FY | PLATE 1 SHAPE | PLATE 1 WIDTH | PLATE 1 THICK | PLATE 2 WIDTH | PLATE 2 THICK | DIMENSIONS LENGTH | DIMENSIONS DIM. A | SUPPORTS LEFT | SUPPORTS RIGHT | STUDS NO. | STUDS SIZE | REMARKS |
|---|---|---|---|---|---|---|---|---|---|---|---|---|---|---|---|
| 2867 | - | 100 | 36 | 27WF84 | - | - | - | - | - | - | 205Q | 320A | 30 | 3/4X3 | |
| 2868 | 30X7 BU | 300 | 36 | - | 7 | 2 | 26 | 3/4 | - | - | 309A | 309A | - | - | |
| 2869 | 30X7 BU | 300 | 36 | - | 7 | 2 | 26 | 3/4 | - | - | 309A | 316B | - | - | |
| 2870 | 26X7 BU | 300 | 36 | - | 7 | 2- 1/4 | 21-1/2 | 1/2 | - | - | 309A | 220P | - | - | |
| 2871 | 30X7 BU | 300 | 36 | - | 7 | 2 | 26 | 3/4 | - | - | 267A | 306A | - | - | |
| 2872 | - | 100 | 36 | 16831 | - | - | - | - | - | - | 220E | 364F | - | - | |
| 2873 | 30X7 BU | 300 | 36 | - | 7 | 1- 1/2 | 27 | 5/8 | - | - | 307I | 267A | - | - | |
| 2874 | 30X7 BU | 300 | 36 | - | 7 | 2 | 26 | 3/4 | - | - | 267A | 267A | - | - | |
| 2875 | 30X7 BU | 300 | 36 | - | 7 | 2 | 26 | 3/4 | - | - | 267A | 334D | - | - | |
| 2876 | - | 100 | 36 | 12816.5 | - | - | - | - | - | - | 26.5K | 26.5K | - | - | |
| 2877 | - | 100 | 50 | 16WF40 | - | - | - | - | - | - | 387 | 29.8K | 54 | 3/4X3 | |
| 2878 | - | 100 | 36 | 18WF50 | - | - | - | - | - | - | 287H | 368U | 30 | 3/4X3 | |
| 2879 | - | 100 | 36 | 12B19 | - | - | - | - | - | - | 26.5K | 26.5K | 36 | 5/8X2 | |
| 2880 | - | 100 | 36 | 8B13 | - | - | - | - | - | - | 17.4K | 17.4K | 16 | 5/8X2 | |
| 2881 | - | 404 | 36 | 16WF45 | - | - | - | - | - | - | 26.5K | 274C | 26 | 3/4X3 | |
| 2882 | - | 100 | 36 | 16WF36 | - | - | - | - | - | - | 106E | 106E | 39 | 3/4X3 | H |
| 2883 | - | 100 | 36 | 16WF40 | - | - | - | - | - | - | 171A | 374A | 43 | 3/4X3 | H |
| 2884 | - | 100 | 36 | 16WF36 | - | - | - | - | - | - | 374A | 26.5K | 15 | 3/4X4-1/2 | C |
| 2885 | - | 100 | 36 | 16B31 | - | - | - | - | - | - | 106K | 106L | 106 | 3/4X3 | |
| 2886 | 16X8 BU | 300 | 36 | - | 8 | 3/4 | 14-1/2 | 1/2 | - | - | 378A | 815A | - | - | |
| 2887 | 16X8 BU | 300 | 36 | - | 8 | 1- 1/8 | 13-3/4 | 1/2 | - | - | 815A | 378A | - | - | |
| 2888 | 16X8 BU | 300 | 36 | - | 8 | 1- 1/4 | 13-1/2 | 9/16 | - | - | 378A | 815A | - | - | |
| 2889 | 16X8 BX | 220 | 36 | - | 7-1/4 | 1- 1/4 | 16 | 3/8 | - | - | 816A | 379A | - | - | |
| 2890 | 16X8 BU | 300 | 36 | - | 8 | 1- 1/8 | 13-3/4 | 1/2 | - | - | 378A | 815A | - | - | |
| 2891 | 16X8 BU | 300 | 36 | - | 8 | 3/4 | 14-1/2 | 1/2 | - | - | 815A | 378A | - | - | |
| 2892 | 16X8 BX | 220 | 36 | - | 7-1/4 | 1- 1/4 | 16 | 3/8 | - | - | 379A | 816A | - | - | |
| 2893 | 16X8 BU | 300 | 36 | - | 8 | 1- 1/4 | 13-1/2 | 9/16 | - | - | 815A | 378A | - | - | |
| 2894 | - | 100 | 36 | 16WF40 | - | - | - | - | - | - | 171A | 374A | 39 | 3/4X3 | |
| 2895 | - | 100 | 36 | 16WF58 | - | - | - | - | - | - | 463A | 26.5K | 14 | 3/4X3 | |
| 2896 | - | 100 | 36 | 16WF40 | - | - | - | - | - | - | 26.5K | 242A | 39 | 3/4X3 | |
| 2897 | 27X7 BU | 300 | 36 | - | 7 | 1- 1/4 | 24-1/2 | 3/4 | - | - | 278A | 479A | - | - | |
| 2898 | - | 100 | 36 | 16WF40 | - | - | - | - | - | - | 26.5K | 26.5K | 39 | 3/4X3 | |
| 2899 | - | 404 | 36 | 16WF50 | - | - | - | - | - | - | 26.5K | 26.5K | 26 | 3/4X3 | |

LICENSED PROFESSIONAL ENGINEER — LESLIE E. ROBERTSON — No. 34360 — UNIVERSITY OF THE STATE OF NEW YORK

S-A&1- 27

**SKILLING-HELLE-CHRISTIANSEN-ROBERTSON** — **Civil & Structural Engineers**

PROJECT: THE WORLD TRADE CENTER | TITLE: BEAM SCHEDULE TOWERS A AND B | DATE: 1/22/68

REVISIONS

| BEAM NO. | SIZE | TYPE | FY | PLATE 1 SHAPE | PLATE 1 WIDTH | PLATE 1 THICK | PLATE 2 WIDTH | PLATE 2 THICK | DIMENSIONS LENGTH | DIMENSIONS DIM. A | SUPPORTS LEFT | SUPPORTS RIGHT | STUDS NO. | STUDS SIZE | REMARKS |
|---|---|---|---|---|---|---|---|---|---|---|---|---|---|---|---|
| 2900 | - | 100 | 36 | 16WF40 | - | - | - | - | - | - | 106E | 260A | 39 | 3/4X3 | |
| 2901 | - | 100 | 50 | 15CH33.9 | - | - | - | - | - | - | 311D | 311D | - | - | |
| 2902 | - | 100 | 50 | 12CH50.0 | - | - | - | - | - | - | 311D | 226A | - | - | |
| 2903 | - | 100 | 50 | 12CH50.0 | - | - | - | - | - | - | 226A | 311C | - | - | |
| 2904 | - | 100 | 36 | 14B22 | - | - | - | - | - | - | 201H | 283U | - | - | |
| 2905 | - | 100 | 36 | 9CH13.4 | - | - | - | - | - | - | 17.4K | 501A | - | - | |
| 2906 | - | 100 | 36 | 16WF40 | - | - | - | - | - | - | 242B | 26.5K | 44 | 3/4X3 | H |
| 2907 | - | 100 | 36 | 16WF36 | - | - | - | - | - | - | 106E | 106F | 34 | 3/4X3 | |
| 2908 | - | 100 | 36 | 16WF40 | - | - | - | - | - | - | 26.5K | 26.5K | 44 | 3/4X3 | H |
| 2909 | - | 100 | 36 | 16WF36 | - | - | - | - | - | - | 170B | 398B | 19 | 3/4X3 | |
| 2910 | 16X4 BX | 200 | 36 | - | 2-1/2 | 3/8 | 16 | 3/4 | - | - | 210A | 210A | - | - | |
| 2911 | - | 100 | 50 | 16B31 | - | - | - | - | - | - | 26.5K | 26.5K | 15 | 3/4X3 | |
| 2912 | - | 100 | 36 | 14B22 | - | - | - | - | - | - | 201F | 26.5K | - | - | |
| 2913 | - | 100 | 36 | 16WF36 | - | - | - | - | - | - | 377A | 377A | 8 | 3/4X3 | |
| 2914 | - | 100 | 36 | 8B13 | - | - | - | - | - | - | 283J | 111I | - | - | |
| 2915 | - | 100 | 50 | 15CH40.0 | - | - | - | - | - | - | 383A | 375A | - | - | |
| 2916 | - | 100 | 50 | 15CH40.0 | - | - | - | - | - | - | 375A | 375A | - | - | |
| 2917 | - | 100 | 50 | 15CH40.0 | - | - | - | - | - | - | 375A | 376A | - | - | |
| 2918 | - | 100 | 50 | 15CH40.0 | - | - | - | - | - | - | 376A | 375A | - | - | |
| 2919 | - | 100 | 50 | 15CH40.0 | - | - | - | - | - | - | 375A | 375A | - | - | |
| 2920 | - | 100 | 50 | 15CH40.0 | - | - | - | - | - | - | 375A | 383A | - | - | |
| 2921 | - | 100 | 36 | 16WF36 | - | - | - | - | - | - | 377A | 235B | 15 | 3/4X3 | |
| 2922 | - | 100 | 36 | 16WF36 | - | - | - | - | - | - | 377A | 235B | 15 | 3/4X3 | |
| 2923 | - | 100 | 36 | 16WF36 | - | - | - | - | - | - | 235B | 377A | 15 | 3/4X3 | |
| 2924 | - | 100 | 50 | 16WF50 | - | - | - | - | - | - | 382B | 810A | - | - | |
| 2925 | - | 100 | 50 | 16WF50 | - | - | - | - | - | - | 401C | 401C | - | - | |
| 2926 | - | 100 | 50 | 16WF50 | - | - | - | - | - | - | 205H | 812A | - | - | 3 |
| 2927 | - | 100 | 50 | 16WF50 | - | - | - | - | - | - | 812A | 205H | - | - | 4 |
| 2928 | - | 100 | 50 | 16WF50 | - | - | - | - | - | - | 401C | 401C | - | - | |
| 2929 | - | 100 | 50 | 16WF50 | - | - | - | - | - | - | 810A | 382B | - | - | |
| 2930 | - | 100 | 50 | 16WF50 | - | - | - | - | - | - | 382B | 810B | - | - | |
| 2931 | - | 100 | 50 | 16WF50 | - | - | - | - | - | - | 401C | 401C | - | - | |
| 2932 | - | 100 | 50 | 16WF50 | - | - | - | - | - | - | 205H | 335E | - | - | 1 |
| 2933 | - | 100 | 50 | 16WF50 | - | - | - | - | - | - | 307F | 205H | - | - | 2 |

REMARKS

1 DETAIL 405 RIGHT END OF BEAM
2 DETAIL 405 LEFT END OF BEAM
3 DETAIL 474A RIGHT END OF BEAM
4 DETAIL 474A LEFT END OF BEAM

LICENSED PROFESSIONAL ENGINEER — LESLIE E. ROBERTSON — No. 34360 — UNIVERSITY OF THE STATE OF NEW YORK

5-AP1- 88

**SKILLING-HELLE-CHRISTIANSEN-ROBERTSON** — **Civil & Structural Engineers**

PROJECT: THE WORLD TRADE CENTER | TITLE: BEAM SCHEDULE TOWERS A AND B | DATE: 7/17/68

REVISIONS

| BEAM NO. | SIZE | TYPE | FY | PLATE 1 SHAPE | PLATE 1 WIDTH | PLATE 1 THICK | PLATE 2 WIDTH | PLATE 2 THICK | DIMENSIONS LENGTH | DIMENSIONS DIM. A | SUPPORTS LEFT | SUPPORTS RIGHT | STUDS NO. | STUDS SIZE | REMARKS |
|---|---|---|---|---|---|---|---|---|---|---|---|---|---|---|---|
| 2934 | - | 100 | 50 | 16WF50 | - | - | - | - | - | - | 401C | 401C | - | - | |
| 2935 | - | 100 | 50 | 16WF50 | - | - | - | - | - | - | 810B | 382B | - | - | |
| 2936 | 16X8 BX | 252 | 36 | - | 8 | 1/2 | 15 | 1/2 | - | - | 383A | 382B | - | - | |
| 2937 | 16X8 BX | 252 | 36 | - | 8 | 1/2 | 15 | 1/2 | - | - | 382B | 382C | - | - | |
| 2938 | 16X8 BX | 252 | 36 | - | 8 | 1/2 | 15 | 1/2 | - | - | 382C | 382A | - | - | 5 |
| 2939 | 16X8 BX | 252 | 36 | - | 8 | 1/2 | 15 | 1/2 | - | - | 382A | 382B | - | - | 6 |
| 2940 | 16X8 BX | 252 | 36 | - | 8 | 1/2 | 15 | 1/2 | - | - | 382B | 383A | - | - | |
| 2941 | - | 100 | 36 | 15CH33.9 | - | - | - | - | - | - | SEE | PLAN | - | - | |
| 2942 | - | 100 | 36 | 15CH33.9 | - | - | - | - | - | - | SEE | PLAN | - | - | 7 |
| 2943 | - | 100 | 36 | 15CH33.9 | - | - | - | - | - | - | SEE | PLAN | - | - | 8 |
| 2944 | - | 100 | 36 | 15CH33.9 | - | - | - | - | - | - | SEE | PLAN | - | - | |
| 2945 | - | 100 | 36 | 8B13 | - | - | - | - | - | - | 17.4K | 17.4K | - | - | |
| 2946 | - | 100 | 36 | 12B19 | - | - | - | - | - | - | 474A | 26.5K | - | - | |
| 2947 | - | 100 | 36 | 8B13 | - | - | - | - | - | - | 17.4K | 17.4K | 11 | 3/4X3 | |
| 2948 | - | 100 | 36 | 8B13 | - | - | - | - | - | - | 17.4K | 17.4K | - | - | |
| 2949 | - | 100 | 36 | 8B13 | - | - | - | - | - | - | 17.4K | 17.4K | 8 | 3/4X3 | |
| 2950 | - | 100 | 36 | 16WF96 | - | - | - | - | - | - | 377A | 377A | - | - | |
| 2951 | - | 100 | 36 | 8B13 | - | - | - | - | - | - | 260C | 260C | - | - | |
| 2952 | - | 100 | 36 | 12WF36 | - | - | - | - | - | - | 370D | 235B | - | - | |
| 2953 | - | 100 | 36 | 8B13 | - | - | - | - | - | - | 452A | 452A | - | - | |
| 2954 | - | 100 | 36 | 16B26 | - | - | - | - | - | - | 346A | 201S | 6 | 3/4X3B | |
| 2955 | - | 100 | 36 | 12B16.5 | - | - | - | - | - | - | 17.4K | 346A | - | - | |
| 2956 | - | 100 | 36 | 14B22 | - | - | - | - | - | - | 26.5K | 201S | 20 | 3/4X3 | |
| 2957 | - | 100 | 36 | 16WF36 | - | - | - | - | - | - | 26.5K | 26.5K | 8 | 3/4X3 | |
| 2958 | - | 100 | 50 | 16WF50 | - | - | - | - | - | - | 382B | 811A | - | - | |
| 2959 | - | 100 | 36 | 16WF40 | - | - | - | - | - | - | 208F | 806B | 19 | 3/4X3 | |
| 2960 | - | 100 | 50 | 16WF50 | - | - | - | - | - | - | 205H | - | - | - | 1,3 |
| 2961 | - | 100 | 50 | 16WF50 | - | - | - | - | - | - | - | 205H | - | - | 2,4 |
| 2962 | - | 100 | 36 | 16WF36 | - | - | - | - | - | - | 811B | 26.5K | 20 | 3/4X3 | |
| 2963 | - | 100 | 50 | 16WF50 | - | - | - | - | - | - | 811A | 382B | - | - | |
| 2964 | - | 100 | 50 | 16WF50 | - | - | - | - | - | - | 382B | 811B | - | - | |
| 2965 | - | 100 | 50 | 16WF50 | - | - | - | - | - | - | 811B | 382B | - | - | |
| 2966 | - | 100 | 36 | 8B13 | - | - | - | - | - | - | 17.4K | 105H | - | - | |

REMARKS

1. DETAIL 474A RIGHT END OF BEAM
2. DETAIL 474A LEFT END OF BEAM
3. SEE 6-AB5-3, FOR RIGHT CONN. DET.
4. SEE 6-AB5-3.1, FOR LEFT CONN.DET.
5. DETAIL 382D, RIGHT SUPPORT, TOWER B ONLY
6. DETAIL 382D, LEFT SUPPORT, TOWER B ONLY
7. DETAIL 410B, RIGHT END OF BEAM
8. DETAIL 410B, LEFT END OF BEAM

LICENSED PROFESSIONAL ENGINEER — LESLIE E. ROBERTSON — No. 34360 — UNIVERSITY OF THE STATE OF NEW YORK

**SKILLING, HELLE, CHRISTIANSEN, ROBERTSON** — **Structural & Civil Engineers**

PROJECT: THE WORLD TRADE CENTER | TITLE: BEAM SCHEDULE TOWERS A AND B | DATE: 9/30/69

REVISIONS

| BEAM NO. | SIZE | TYPE | FY | SHAPE | PLATE 1 WIDTH | PLATE 1 THICK | PLATE 2 WIDTH | PLATE 2 THICK | DIMENSIONS LENGTH | DIMENSIONS DIM. A | SUPPORTS LEFT | SUPPORTS RIGHT | STUDS NO. | STUDS SIZE | REMARKS |
|---|---|---|---|---|---|---|---|---|---|---|---|---|---|---|---|
| 2967 | - | 100 | 36 | 18WF45 | - | - | - | - | - | - | 53.0K | 456D | - | - | |
| 2968 | - | 100 | 50 | 12WF45 | - | - | - | - | - | - | 364B | 364B | - | - | |
| 2969 | - | 100 | 36 | 8B13 | - | - | - | - | - | - | 17.4K | 17.4K | - | - | |
| 2970 | - | 100 | 36 | 21WF55 | - | - | - | - | - | - | 35.0K | 60.0K | - | - | |
| 2971 | - | 100 | 36 | 16WF58 | - | - | - | - | - | - | 26.5K | 463A | 14 | 3/4X3 | |
| 2972 | - | 100 | 36 | 14B22 | - | - | - | - | - | - | 26.5K | 26.5K | - | - | |
| 2973 | - | 100 | 36 | 12WF27 | - | - | - | - | - | - | 201Q | 105L | 13 | 3/4X4-1/2 | X |
| 2974 | 16X5-1/2BX | 201 | 36 | - | 4 | 3/8 | 16 | 3/4 | - | - | 296C | 296C | - | - | |
| 2975 | - | 100 | 36 | 8B13 | - | - | - | - | - | - | 201 | 201 | - | - | |
| 2976 | - | 100 | 36 | 9CH13.4 | - | - | - | - | - | - | 501 | 517 | - | - | |
| 2977 | - | 100 | 36 | 12B16.5 | - | - | - | - | - | - | 26.5K | 26.5K | 15 | 3/4X3 | |
| 2978 | - | 100 | 36 | 12B16.5 | - | - | - | - | - | - | 26.5K | 26.5K | 15 | 3/4X3 | |
| 2979 | 15X3-3/8CH | 505 | 36 | 15CH33.9 | 2-3/8 | 5/16 | - | - | - | - | 315 | 233 | - | - | |
| 2980 | - | 100 | 36 | 16WF40 | - | - | - | - | - | - | 106E | 111M | 30 | 3/4X3 | |
| 2981 | - | 100 | 36 | 16WF36 | - | - | - | - | - | - | 286B | 292A | 39 | 3/4X3 | |
| 2982 | - | 100 | 36 | 27WF84 | - | - | - | - | - | - | 482B | 482B | 8 | 3/4X3 | |
| 2983 | - | 100 | 36 | 12B19 | - | - | - | - | - | - | 17.4K | 17.4K | - | - | |
| 2984 | - | 100 | 36 | 12WF31 | - | - | - | - | - | - | 364B | 364B | - | - | |
| 2985 | - | 100 | 36 | 12WF45 | - | - | - | - | - | - | 201Q | 201Q | 12 | 3/4X3 | |
| 2986 | - | 100 | 36 | 12WF45 | - | - | - | - | - | - | 364B | 364B | - | - | |
| 2987 | 16X8 BU | 300 | 36 | - | 8 | 3/4 | 14-1/2 | 1/2 | - | - | 814A | 378A | - | - | |
| 2988 | 16X8 BU | 300 | 36 | - | 8 | 1- 1/8 | 13-3/4 | 1/2 | - | - | 378A | 814A | - | - | |
| 2989 | 16X8 BU | 300 | 36 | - | 8 | 1- 1/4 | 13-1/2 | 9/16 | - | - | 814A | 378A | - | - | |
| 2990 | 16X8 BX | 220 | 36 | - | 7-1/4 | 1- 1/4 | 16 | 3/8 | - | - | 380A | 889A | - | - | |
| 2991 | 16X8 BU | 300 | 36 | - | 8 | 1- 1/8 | 13-3/4 | 1/2 | - | - | 814A | 378A | - | - | |
| 2992 | 16X8 BU | 300 | 36 | - | 8 | 3/4 | 14-1/2 | 1/2 | - | - | 378A | 814A | - | - | |
| 2993 | 16X8 BX | 220 | 36 | - | 7-1/4 | 1- 1/4 | 16 | 3/8 | - | - | 889A | 380A | - | - | |
| 2994 | 16X8 BU | 300 | 36 | - | 8 | 1- 1/4 | 13-1/2 | 9/16 | - | - | 378A | 814A | - | - | |
| 2995 | - | 100 | 36 | 8B13 | - | - | - | - | - | - | 105 | 105 | - | - | |
| 2996 | - | 100 | 36 | 14B22 | - | - | - | - | - | - | 501 | 201 | - | - | |
| 2997 | - | 100 | 36 | 12B19 | - | - | - | - | - | - | 501 | 501 | - | - | |
| 2998 | - | 100 | 36 | 12B16.5 | - | - | - | - | - | - | 339 | 346A | - | - | |
| 2999 | - | 100 | 36 | 16B26 | - | - | - | - | - | - | 346A | 201S | - | - | |

LICENSED PROFESSIONAL ENGINEER — LESLIE E. ROBERTSON — No. 34360 — UNIVERSITY OF THE STATE OF NEW YORK

**SKILLING-HELLE-CHRISTIANSEN-ROBERTSON** — **Civil & Structural Engineers**

PROJECT: THE WORLD TRADE CENTER | TITLE: BEAM SCHEDULE TOWERS A AND B | DATE: 1/22/68

REVISIONS

| BEAM NO. | SIZE | TYPE | FY | PLATE 1 SHAPE | PLATE 1 WIDTH | PLATE 1 THICK | PLATE 2 WIDTH | PLATE 2 THICK | DIMENSIONS LENGTH | DIMENSIONS DIM. A | SUPPORTS LEFT | SUPPORTS RIGHT | STUDS NO. | STUDS SIZE | REMARKS |
|---|---|---|---|---|---|---|---|---|---|---|---|---|---|---|---|
| 3000 | - | 100 | 50 | 16WF96 | - | - | - | - | - | - | 377B | 377B | 8 | 3/4X3 | |
| 3001 | - | 100 | 50 | 16WF36 | - | - | - | - | - | - | 377B | 377B | 8 | 3/4X3 | |
| 3002 | 18X8 BU | 300 | 50 | - | 8 | 7/8 | 16-1/4 | 1/2 | - | - | 885A | 886A | - | - | |
| 3003 | 18X8 BU | 300 | 50 | - | 8 | 7/8 | 16-1/4 | 1/2 | - | - | 887A | 885A | - | - | |
| 3004 | 18X8 BU | 300 | 50 | - | 8 | 7/8 | 16-1/4 | 1/2 | - | - | 884A | 887A | - | - | |
| 3005 | 18X8 BU | 300 | 50 | - | 8 | 7/8 | 16-1/4 | 1/2 | - | - | 885A | 884A | 40 | 3/4X3 | |
| 3006 | 18X8 BU | 300 | 50 | - | 8 | 7/8 | 16-1/4 | 1/2 | - | - | 886A | 885A | - | - | |
| 3007 | 18X8 BU | 300 | 50 | - | 8 | 7/8 | 16-1/4 | 1/2 | - | - | 886A | 885A | 28 | 3/4X3 | |
| 3008 | 18X8 BU | 300 | 50 | - | 8 | 7/8 | 16-1/4 | 1/2 | - | - | 885A | 884A | 40 | 3/4X3 | |
| 3009 | 18X8 BU | 300 | 50 | - | 8 | 7/8 | 16-1/4 | 1/2 | - | - | 884A | 883A | 20 | 3/4X3 | |
| 3010 | 24X8 BU | 300 | 50 | - | 8 | 1 | 22 | 3/4 | - | - | 883A | 881A | - | - | |
| 3011 | 24X8 BU | 300 | 50 | - | 8 | 1 | 22 | 3/4 | - | - | 881A | 879A | - | - | |
| 3012 | - | 100 | 50 | 16WF36 | - | - | - | - | - | - | 377B | 377B | 8 | 3/4X3 | |
| 3013 | - | 100 | 50 | 16WF96 | - | - | - | - | - | - | 377B | 377B | 8 | 3/4X3 | |
| 3014 | - | 100 | 50 | 18WF45 | - | - | - | - | - | - | 235B | 377B | 15 | 3/4X3 | |
| 3015 | - | 100 | 50 | 18WF45 | - | - | - | - | - | - | 802B | 800B | 8 | 3/4X3 | |
| 3016 | - | 100 | 50 | 18WF45 | - | - | - | - | - | - | 801B | 803D | 10 | 3/4X3 | |
| 3017 | - | 100 | 50 | 18WF45 | - | - | - | - | - | - | 804B | 803D | 10 | 3/4X3 | |
| 3018 | - | 100 | 50 | 18WF45 | - | - | - | - | - | - | 801B | 804B | 24 | 3/4X3 | |
| 3019 | - | 100 | 50 | 18WF45 | - | - | - | - | - | - | 804D | 802B | 20 | 3/4X3 | |
| 3020 | - | 100 | 50 | 18WF45 | - | - | - | - | - | - | 26.5K | 802B | - | - | |
| 3021 | - | 100 | 50 | 18WF45 | - | - | - | - | - | - | 174A | 803E | - | - | |
| 3022 | - | 100 | 50 | 18WF45 | - | - | - | - | - | - | 803D | 804B | 10 | 3/4X3 | |
| 3023 | - | 100 | 50 | 18WF45 | - | - | - | - | - | - | 803E | 174A | - | - | |
| 3024 | - | 100 | 50 | 18WF45 | - | - | - | - | - | - | 803D | 801B | 10 | 3/4X3 | |
| 3025 | - | 100 | 50 | 18WF45 | - | - | - | - | - | - | 800B | 26.5K | 24 | 3/4X3 | |
| 3026 | - | 100 | 50 | 18WF45 | - | - | - | - | - | - | 802B | 801B | 10 | 3/4X3 | |
| 3027 | - | 100 | 50 | 18WF45 | - | - | - | - | - | - | 26.5K | 802B | - | - | |
| 3028 | - | 100 | 50 | 18WF45 | - | - | - | - | - | - | 802B | 804D | 20 | 3/4X3 | |
| 3029 | - | 100 | 50 | 18WF45 | - | - | - | - | - | - | 803C | 806C | 10 | 3/4X3 | |
| 3030 | - | 100 | 50 | 18WF45 | - | - | - | - | - | - | 803C | 26.5K | - | - | |
| 3031 | - | 100 | 50 | 18WF45 | - | - | - | - | - | - | 803C | 807B | 10 | 3/4X3 | |
| 3032 | - | 100 | 50 | 18WF45 | - | - | - | - | - | - | 805B | 807B | 10 | 3/4X3 | |
| 3033 | - | 100 | 50 | 18WF45 | - | - | - | - | - | - | 335F | 805B | 15 | 3/4X3 | |

LICENSED PROFESSIONAL ENGINEER — LESLIE E. ROBERTSON — No. 34360 — STATE OF NEW YORK

**SKILLING, HELLE, CHRISTIANSEN, ROBERTSON** — Structural & Civil Engineers

PROJECT: THE WORLD TRADE CENTER | TITLE: BEAM SCHEDULE TOWERS A AND B | DATE: 08/15/69

REVISIONS

| BEAM NO. | SIZE | TYPE | FY | SHAPE | PLATE 1 WIDTH | PLATE 1 THICK | PLATE 2 WIDTH | PLATE 2 THICK | DIMENSIONS LENGTH | DIMENSIONS DIM. A | SUPPORTS LEFT | SUPPORTS RIGHT | STUDS NO. | STUDS SIZE | REMARKS |
|---|---|---|---|---|---|---|---|---|---|---|---|---|---|---|---|
| 3034 | - | 100 | 36 | 12WF50 | - | - | - | - | - | - | 283A | 283A | - | - | |
| 3035 | - | 100 | 36 | 14B22 | - | - | - | - | - | - | 26.5K | 201S | 20 | 3/4X3 | |
| 3036 | - | 100 | 36 | 12WF31 | - | - | - | - | - | - | 201Q | 17.4K | - | - | 8 |
| 3037 | - | 100 | 50 | 16WF50 | - | - | - | - | - | - | 201X | 179A | 12 | 3/4X3C | |
| 3038 | - | 100 | 50 | 16WF78 | - | - | - | - | - | - | 35.0K | 50.0K | 80 | 3/4X3 | |
| 3039 | - | 100 | 50 | 16WF45 | - | - | - | - | - | - | 106E | 106E | 39 | 3/4X3 | X |
| 3040 | - | 100 | 36 | 12B19 | - | - | - | - | - | - | 17.4K | 292A | 22 | 3/4X3 | |
| 3041 | - | 100 | 36 | 16WF36 | - | - | - | - | - | - | 292A | 26.5K | - | - | |
| 3042 | - | 100 | 50 | 12B19 | - | - | - | - | - | - | 17.4K | 17.4K | 14 | 3/4X3 | |
| 3043 | - | 100 | 36 | 8B13 | - | - | - | - | - | - | 481A | 105H | - | - | |
| 3044 | - | 100 | 36 | 16B31 | - | - | - | - | - | - | 26.5K | 26.5K | - | - | |
| 3045 | - | 100 | 36 | 12B19 | - | - | - | - | - | - | 17.4K | 17.4K | - | - | |
| 3046 | - | 100 | 36 | 16B26 | - | - | - | - | - | - | 26.5K | 26.5K | - | - | |
| 3047 | - | 100 | 36 | 12B19 | - | - | - | - | - | - | 17.4K | 17.4K | - | - | |
| 3048 | - | 100 | 36 | 8B13 | - | - | - | - | - | - | 17.4K | 17.4K | - | - | |
| 3049 | - | 100 | 36 | 14B22 | - | - | - | - | - | - | 106 | 106 | - | - | |
| 3050 | - | 100 | 36 | 12B16.5 | - | - | - | - | - | - | 346 | 201 | - | - | |
| 3051 | - | 100 | 36 | 12B16.5 | - | - | - | - | - | - | 17.4K | 295 | - | - | |
| 3052 | - | 100 | 36 | 12B16.5 | - | - | - | - | - | - | 295 | 503 | - | - | |
| 3053 | - | 100 | 36 | 12B16.5 | - | - | - | - | - | - | 357 | 346 | - | - | |
| 3054 | - | 100 | 36 | 12WF36 | - | - | - | | - | - | 370D | 235E | - | - | |
| 3055 | - | 100 | 50 | 16WF50 | - | - | - | - | - | - | 812B | 205H | - | - | |
| 3056 | 16X8 BX | 252 | 36 | | 8 | 1/2 | 15 | 1/2 | - | - | 382A | 812B | - | - | 7 |
| 3057 | - | 100 | 50 | 16WF50 | - | - | - | - | - | - | - | 335E | - | - | 1,4 |
| 3058 | - | 100 | 50 | 16WF50 | - | - | - | - | - | - | 205H | 810A | - | - | 2 |
| 3059 | 16X8 BX | 252 | 36 | | 8 | 1/2 | 15 | 1/2 | - | - | 812B | 382C | - | - | |
| 3060 | - | 100 | 50 | 16WF50 | - | - | - | - | - | - | 205H | 812B | - | - | |
| 3061 | - | 100 | 50 | 16WF50 | - | - | - | - | - | - | 812B | 205H | - | - | |
| 3062 | - | 100 | 36 | 16WF40 | - | - | - | - | - | - | 208F | 335E | 19 | 3/4X3 | |
| 3063 | - | 100 | 50 | 16WF50 | - | - | - | - | - | - | - | 335E | - | - | 3,6 |
| 3064 | - | 100 | 50 | 16WF50 | - | - | - | - | - | - | 307F | - | - | - | 5 |
| 3065 | 16X8 BX | 252 | 36 | | 8 | 1/2 | 15 | 1/2 | - | - | 812B | 383A | - | - | |
| 3066 | - | 100 | 50 | 16WF50 | - | - | - | - | - | - | 205H | 812B | - | - | |

REMARKS

1. DETAIL 474A RIGHT END OF BEAM
2. DETAIL 474A LEFT END OF BEAM
3. DETAIL 405 RIGHT END OF BEAM
4. SEE 6-AB5-3 FOR LEFT CONN. DET.
5. SEE 6-AB5-4 FOR RIGHT CONN. DET.
6. SEE 6-AB5-4 FOR LEFT CONN. DET.
7. DETAIL 382D, LEFT SUPPORT, TOWER B ONLY
8. AT FLOOR 106 (TOWERS A&B) USE STUDS 16-3/4X3

LICENSED PROFESSIONAL ENGINEER — LESLIE E. ROBERTSON — No. 34360 — UNIVERSITY OF THE STATE OF NEW YORK

**SKILLING-HELLE-CHRISTIANSEN-ROBERTSON** **Civil & Structural Engineers**

PROJECT THE WORLD TRADE CENTER | TITLE BEAM SCHEDULE TOWERS A AND B | DATE 1/22/68

REVISIONS

| BEAM NO. | SIZE | TYPE | FY | SHAPE | PLATE 1 WIDTH | PLATE 1 THICK | PLATE 2 WIDTH | PLATE 2 THICK | DIMENSIONS LENGTH | DIMENSIONS DIM. A | SUPPORTS LEFT | SUPPORTS RIGHT | STUDS NO. | STUDS SIZE | REMARKS |
|---|---|---|---|---|---|---|---|---|---|---|---|---|---|---|---|
| 3067 | - | 100 | 36 | 8B13 | - | - | - | - | - | - | 17.4K | 468 | - | - | |
| 3068 | - | 100 | 36 | 12WF36 | - | - | - | - | - | - | 307E | 287B | - | - | |
| 3069 | - | 100 | 36 | 12B19 | - | - | - | - | - | - | 26.5K | 481 | - | - | |
| 3070 | - | 100 | 36 | 30WF116 | - | - | - | - | - | - | 494 | 494 | 8 | 3/4X3 | |
| 3071 | - | 100 | 36 | 16WF36 | - | - | - | - | - | - | 292 | 26.5K | - | - | |
| 3072 | - | 100 | 36 | 16B26 | - | - | - | - | - | - | 26.5K | 26.5K | - | - | X |
| 3073 | 25X7 BU | 300 | 36 | - | 7 | 1- 1/2 | 22 | 3/4 | - | - | 479A | 278A | - | - | |
| 3074 | 38X7 BU | 301 | 36 | - | 7 | 1- 1/2 | 35 | 3/4 | - | - | 171B | 242B | - | - | 1 |
| 3075 | - | 100 | 36 | 30WF116 | - | - | - | - | - | - | 106P | 106P | 12 | 3/4X3 | |
| 3076 | 30X7 BU | 300 | 36 | - | 7 | 1- 1/8 | 27-3/4 | 5/8 | - | - | 106P | 215C | 12 | 3/4X3C | |
| 3077 | - | 100 | 36 | 14B22 | - | - | - | - | - | - | 217B | 218B | 8 | 3/4X3 | |
| 3078 | - | 100 | 50 | 16WF36 | - | - | - | - | - | - | 105 | 26.5K | 30 | 3/4X3 | |
| 3079 | - | 100 | 50 | 16B26 | - | - | - | - | - | - | 26.5K | 26.5K | 15 | 3/4X3C | |
| 3080 | - | 100 | 50 | 16B26 | - | - | - | - | - | - | 26.5K | 26.5K | 40 | 3/4X3 | |
| 3081 | - | 100 | 50 | 16WF36 | - | - | - | - | - | - | 105 | 26.5K | - | - | |
| 3082 | - | 100 | 50 | 16B26 | - | - | - | - | - | - | 26.5K | 105 | 40 | 3/4X3 | |
| 3083 | - | 100 | 36 | 30WF116 | - | - | - | - | - | - | 494 | K | 40 | 3/4X3 | |
| 3084 | - | 100 | 36 | 8B13 | - | - | - | - | - | - | 105 | 105 | 12 | 3/4X3 | |
| 3085 | 16X4 BX | 200 | 36 | - | 2-1/2 | 3/8 | 16 | 3/4 | - | - | 210 | 210 | 12 | 3/4X3 | |
| 3086 | - | 100 | 36 | 16B26 | - | - | - | - | - | - | 26.5K | 208 | - | - | |
| 3087 | - | 100 | 36 | 14B22 | - | - | - | - | - | - | 339 | 105 | 12 | 3/4X3 | |
| 3088 | - | 100 | 36 | 16B26 | - | - | - | - | - | - | 346 | 201 | - | - | |
| 3089 | - | 100 | 36 | 12B16.5 | - | - | - | - | - | - | 26.5K | 26.5K | - | - | |
| 3090 | - | 100 | 36 | 12WF27 | - | - | - | - | - | - | 105 | 105 | - | - | |
| 3091 | - | 100 | 50 | 30WF116 | - | - | - | - | - | - | K | 494 | 40 | 3/4X3 | |
| 3092 | - | 100 | 50 | 16B26 | - | - | - | - | - | - | 105 | 26.5K | 40 | 3/4X3 | |
| 3093 | - | 100 | 50 | 16B26 | - | - | - | - | - | - | 26.5K | 105 | 40 | 3/4X3 | |
| 3094 | - | 100 | 50 | 16B26 | - | - | - | - | - | - | 26.5K | 26.5K | 40 | 3/4X3 | |
| 3095 | - | 100 | 50 | 16WF36 | - | - | - | - | - | - | 105 | 26.5K | 56 | 3/4X3 | |
| 3096 | - | 100 | 50 | 16WF36 | - | - | - | - | - | - | 170 | 105 | 56 | 3/4X3 | |
| 3097 | - | 100 | 50 | 16B26 | - | - | - | - | - | - | 105 | 26.5K | 40 | 3/4X3 | |
| 3098 | - | 100 | 36 | 12CH20.7 | - | - | - | - | - | - | 26.5K | 26.5K | - | - | |
| 3099 | - | 100 | 50 | 16B26 | - | - | - | - | - | - | 266 | 357 | 40 | 3/4X3 | |

REMARKS

1 REINF. PLATES 5FT-9 X 3/4

LICENSED PROFESSIONAL ENGINEER LESLIE E. ROBERTS No. 34560 UNIVERSITY OF THE STATE OF NEW YORK

**SKILLING, HELLE, CHRISTIANSEN, ROBERTSON** — Structural & Civil Engineers

PROJECT: THE WORLD TRADE CENTER | TITLE: BEAM SCHEDULE TOWERS A AND B | DATE: 7/7/68

REVISIONS

| BEAM NO. | SIZE | TYPE | FY | SHAPE | PLATE 1 WIDTH | PLATE 1 THICK | PLATE 2 WIDTH | PLATE 2 THICK | DIMENSIONS LENGTH | DIMENSIONS DIM. A | SUPPORTS LEFT | SUPPORTS RIGHT | STUDS NO. | STUDS SIZE | REMARKS |
|---|---|---|---|---|---|---|---|---|---|---|---|---|---|---|---|
| * 3100 | - | 100 | 36 | 8B13 | - | - | - | - | - | - | 17.4K | 17.4K | - | - | |
| 3101 | - | 100 | 50 | 12WF120 | - | - | - | - | - | - | 238C | 294A | - | - | |
| 3102 | - | 100 | 50 | 12WF120 | - | - | - | - | - | - | 294A | 331A | - | - | |
| 3103 | - | 100 | 50 | 12WF120 | - | - | - | - | - | - | 337A | 294A | - | - | |
| 3104 | - | 100 | 50 | 12WF120 | - | - | - | - | - | - | 294A | 238A | - | - | |
| 3105 | 12X5-1/2BX | 200 | 36 | - | 3 | 3/8 | 12 | 1- 1/4 | - | - | 247F | 294A | - | - | X |
| 3106 | - | 100 | 36 | 12WF72 | - | - | - | - | - | - | 317A | 370F | - | - | |
| 3107 | 16X4 BU | 300 | 36 | - | 4 | 3/4 | 14-1/2 | 3/8 | - | - | 26.5K | 26.5K | - | - | |
| 3108 | - | 100 | 36 | 12WF27 | - | - | - | - | - | - | 111H | 111H | - | - | |
| 3109 | - | 100 | 50 | 12B19 | - | - | - | - | - | - | 26.5K | 208E | - | - | |
| 3110 | 12X5-1/2BX | 200 | 36 | - | 3 | 3/8 | 12 | 1- 1/4 | - | - | 372B | 331A | - | - | |
| 3111 | - | 100 | 36 | 12WF65 | - | - | - | - | - | - | 445A | 445A | - | - | |
| 3112 | - | 100 | 36 | 12WF50 | - | - | - | - | - | - | 445A | 445A | - | - | |
| 3113 | - | 100 | 50 | 12WF79 | - | - | - | - | - | - | 220H | 287F | - | - | |
| 3114 | - | 100 | 50 | 12WF79 | - | - | - | - | - | - | 287F | 287F | - | - | |
| 3115 | - | 100 | 50 | 12WF36 | - | - | - | - | - | - | 287F | 287B | - | - | |
| 3116 | - | 100 | 50 | 12WF27 | - | - | - | - | - | - | 287B | 287F | - | - | |
| 3117 | - | 100 | 50 | 12WF79 | - | - | - | - | - | - | 287F | 287F | - | - | |
| 3118 | - | 100 | 50 | 12WF79 | - | - | - | - | - | - | 287F | 220H | - | - | |
| 3119 | - | 100 | 50 | 8B13 | - | - | - | - | - | - | 17.4K | 17.4K | - | - | |
| 3120 | - | 100 | 36 | 8B13 | - | - | - | - | - | - | 111N | 105C | - | - | |
| 3121 | - | 100 | 36 | 9CH13.4 | - | - | - | - | - | - | 17.4K | 17.4K | - | - | |
| 3122 | - | 100 | 50 | 12WF27 | - | - | - | - | - | - | 208E | 350C | - | - | |
| 3123 | - | 100 | 50 | 14B22 | - | - | - | - | - | - | 283I | 170C | 18 | 3/4X3 | |
| 3124 | - | 100 | 50 | 12WF31 | - | - | - | - | - | - | 217A | 350C | - | - | |
| 3125 | - | 100 | 36 | 8B13 | - | - | - | - | - | - | 260C | 111H | - | - | |
| 3126 | - | 100 | 36 | 12WF58 | - | - | - | - | - | - | 445A | 445A | - | - | |
| 3127 | - | 100 | 36 | 12WF79 | - | - | - | - | - | - | 220H | 205B | - | - | |
| 3128 | - | 100 | 36 | 12WF79 | - | - | - | - | - | - | 205B | 364B | - | - | |
| 3129 | - | 100 | 36 | 16B31 | - | - | - | - | - | - | 220E | 254C | - | - | |
| 3130 | - | 100 | 36 | 16B31 | - | - | - | - | - | - | 254C | 254C | - | - | |
| 3131 | - | 100 | 36 | 16B31 | - | - | - | - | - | - | 254C | 220G | - | - | (1) |
| 3132 | - | 100 | 36 | 16B31 | - | - | - | - | - | - | 220G | 254C | - | - | |
| 3133 | - | 100 | 36 | 12WF72 | - | - | - | - | - | - | 370F | 317A | - | - | |

REMARKS

1 RIGHT SUPPORT REINFORCED, SEE 20-AB-3

* HOLD

LICENSED PROFESSIONAL ENGINEER — LESLIE E. ROBERTSON — No. 34360 — UNIVERSITY OF THE STATE OF NEW YORK

5-AB1- 94

**SKILLING-HELLE-CHRISTIANSEN-ROBERTSON** — **Civil & Structural Engineers**

PROJECT: THE WORLD TRADE CENTER | TITLE: BEAM SCHEDULE TOWERS A AND B | DATE: 1/22/68

REVISIONS

| BEAM NO. | SIZE | TYPE | FY | SHAPE | PLATE 1 WIDTH | PLATE 1 THICK | PLATE 2 WIDTH | PLATE 2 THICK | DIMENSIONS LENGTH | DIMENSIONS DIM. A | SUPPORTS LEFT | SUPPORTS RIGHT | STUDS NO. | STUDS SIZE | REMARKS |
|---|---|---|---|---|---|---|---|---|---|---|---|---|---|---|---|
| 3134 | - | 100 | 36 | 12WF31 | - | - | - | - | - | - | 283M | 337A | - | - | |
| 3135 | 16X5-1/2BX | 208 | 36 | - | 3-3/4 | 3/8 | 16 | 7/8 | - | - | 464 | 464 | - | - | |
| 3136 | - | 100 | 50 | 12WF36 | - | - | - | - | - | - | 350C | 370D | - | - | |
| 3137 | 16X5-1/2BX | 200 | 36 | - | 4 | 1/4 | 16 | 3/4 | - | - | 206 | 26.5K | - | - | |
| 3138 | 16X5-1/2BX | 208 | 36 | - | 3-3/4 | 3/8 | 16 | 7/8 | - | - | 254B | 247C | - | - | |
| 3139 | - | 100 | 36 | 24I79.9 | - | - | - | - | - | - | 359A | 205B | - | - | X |
| 3140 | - | 100 | 36 | 24I79.9 | - | - | - | - | - | - | 409A | 409A | - | - | |
| 3141 | - | 100 | 50 | 12B22 | - | - | - | - | - | - | 283I | 26.5K | - | - | |
| 3142 | - | 100 | 36 | 12WF27 | - | - | - | - | - | - | 208E | 217A | - | - | |
| 3143 | - | 100 | 36 | 8B13 | - | - | - | - | - | - | 17.4K | 17.4K | - | - | |
| 3144 | - | 100 | 36 | 16B26 | - | - | - | - | - | - | 106 | 106 | - | - | |
| 3145 | - | 100 | 36 | 14B22 | - | - | - | - | - | - | 26.5K | 26.5K | - | - | |
| 3146 | - | 100 | 36 | 16B31 | - | - | - | - | - | - | 220G | 254B | - | - | |
| 3147 | - | 100 | 36 | 16WF45 | - | - | - | - | - | - | 220H | 205D | - | - | |
| 3148 | - | 100 | 36 | 16WF40 | - | - | - | - | - | - | 401B | 401B | - | - | |
| 3149 | - | 100 | 36 | 16WF45 | - | - | - | - | - | - | 205D | 310C | - | - | |
| 3150 | - | 100 | 36 | 16WF45 | - | - | - | - | - | - | 307D | 310C | - | - | |
| 3151 | - | 100 | 36 | 24I79.9 | - | - | - | - | - | - | 205B | 220F | - | - | |
| 3152 | - | 100 | 36 | 24I79.9 | - | - | - | - | - | - | 220F | 205B | - | - | |
| 3153 | - | 100 | 36 | 12WF72 | - | - | - | - | - | - | 317A | 317A | - | - | |
| 3154 | - | 100 | 36 | 12WF79 | - | - | - | - | - | - | 370G | 317A | - | - | |
| 3155 | - | 100 | 36 | 12WF65 | - | - | - | - | - | - | 445A | 445A | - | - | |
| 3156 | - | 100 | 36 | 12WF72 | - | - | - | - | - | - | 317A | 317A | - | - | |
| 3157 | - | 100 | 36 | 12WF50 | - | - | - | - | - | - | 445A | 445A | - | - | |
| 3158 | - | 100 | 36 | 12WF72 | - | - | - | - | - | - | 317A | 370F | - | - | |
| 3159 | - | 100 | 36 | 12WF79 | - | - | - | - | - | - | 364B | 205A | - | - | |
| 3160 | - | 100 | 36 | 12WF58 | - | - | - | - | - | - | 445A | 445A | - | - | |
| 3161 | - | 100 | 36 | 12WF79 | - | - | - | - | - | - | 205B | 220H | - | - | |
| 3162 | - | 100 | 36 | 12WF65 | - | - | - | - | - | - | 220H | 205A | - | - | |
| 3163 | - | 100 | 36 | 12WF58 | - | - | - | - | - | - | 445A | 445A | - | - | |
| 3164 | - | 100 | 36 | 12WF65 | - | - | - | - | - | - | 205A | 364B | - | - | |
| 3165 | - | 100 | 36 | 12WF72 | - | - | - | - | - | - | 364B | 205B | - | - | |
| 3166 | - | 100 | 36 | 12WF58 | - | - | - | - | - | - | 445A | 445A | - | - | |

LICENSED PROFESSIONAL ENGINEER — LESLIE E. ROBERTSON — No. 34360 — UNIVERSITY OF THE STATE OF NEW YORK

5-481- 95

**SKILLING-HELLE-CHRISTIANSEN-ROBERTSON** — **Civil & Structural Engineers**

PROJECT: THE WORLD TRADE CENTER | TITLE: BEAM SCHEDULE TOWERS A AND B | DATE: 1/22/68

REVISIONS

| BEAM NO. | SIZE | TYPE | FY | SHAPE | PLATE 1 WIDTH | PLATE 1 THICK | PLATE 2 WIDTH | PLATE 2 THICK | DIMENSIONS LENGTH | DIMENSIONS DIM. A | SUPPORTS LEFT | SUPPORTS RIGHT | STUDS NO. | STUDS SIZE | REMARKS |
|---|---|---|---|---|---|---|---|---|---|---|---|---|---|---|---|
| 3167 | - | 100 | 36 | 12WF65 | - | - | - | - | - | - | 205A | 220H | - | - | |
| 3168 | - | 100 | 36 | 16B31 | - | - | - | - | - | - | 254C | 254C | - | - | |
| 3169 | - | 100 | 36 | 16B31 | - | - | - | - | - | - | 254C | 220E | - | - | |
| 3170 | - | 100 | 36 | 16B31 | - | - | - | - | - | - | 220F | 254B | - | - | |
| 3171 | - | 100 | 36 | 16B31 | - | - | - | - | - | - | 254B | 254B | - | - | |
| 3172 | - | 100 | 36 | 16B31 | - | - | - | - | - | - | 254B | 220G | - | - | |
| 3173 | - | 100 | 36 | 16B31 | - | - | - | - | - | - | 254B | 254B | - | - | |
| 3174 | - | 100 | 36 | 16B31 | - | - | - | - | - | - | 254B | 220E | - | - | |
| 3175 | - | 100 | 36 | 16WF40 | - | - | - | - | - | - | 401 | 401 | - | - | |
| 3176 | - | 100 | 36 | 14B22 | - | - | - | - | - | - | 26.5K | 201 | 20 | 3/4X3 | |
| 3177 | - | 100 | 50 | 16B31 | - | - | - | - | - | - | 26.5K | 26.5K | 40 | 3/4X3 | |
| 3178 | - | 100 | 50 | 14B22 | - | - | - | - | - | - | 26.5K | 201 | 34 | 3/4X3 | |
| 3179 | - | 100 | 50 | 16B26 | - | - | - | - | - | - | 105 | 26.5K | 40 | 3/4X3 | |
| 3180 | - | 100 | 50 | 30WF116 | - | - | - | - | - | - | K | 494 | 40 | 3/4X3 | |
| 3181 | - | 100 | 50 | 16B26 | - | - | - | - | - | - | 26.5K | 26.5K | 15 | 3/4X3 | |
| 3182 | - | 100 | 50 | 16B26 | - | - | - | - | - | - | 201 | 105 | 15 | 3/4X3 | |
| 3183 | - | 100 | 36 | 12WF27 | - | - | - | - | - | - | 26.5K | 26.5K | - | - | |
| 3184 | 16X5-1/2BX | 200 | 36 | - | 4 | 1/4 | 16 | 3/4 | - | - | 296 | 296 | - | - | |
| 3185 | 16X5-1/2BX | 200 | 36 | - | 4 | 1/4 | 16 | 3/4 | - | - | 450 | 450 | - | - | |
| 3186 | - | 100 | 50 | 16B26 | - | - | - | - | - | - | 269 | 216 | 19 | 3/4X3 | |
| 3187 | - | 100 | 50 | 16B26 | - | - | - | - | - | - | 201 | 266 | 19 | 3/4X3 | |
| 3188 | - | 100 | 50 | 14B22 | - | - | - | - | - | - | 26.5K | 26.5K | 12 | 3/4X3 | |
| 3189 | - | 100 | 50 | 12WF27 | - | - | - | - | - | - | 354 | 26.5K | 15 | 3/4X3 | |
| 3190 | - | 100 | 50 | 16B26 | - | - | - | - | - | - | 26.5K | 26.5K | 15 | 3/4X3 | |
| 3191 | - | 100 | 50 | 16B26 | - | - | - | - | - | - | 201 | 201 | 15 | 3/4X3 | |
| 3192 | - | 100 | 50 | 16B26 | - | - | - | - | - | - | 26.5K | 26.5K | 15 | 3/4X3 | |
| 3193 | - | 100 | 50 | 21WF55 | - | - | - | - | - | - | 106 | 106 | - | - | |
| 3194 | - | 100 | 50 | 21WF55 | - | - | - | - | - | - | 106 | 106 | 39 | 3/4X3 | |
| 3195 | - | 100 | 36 | 16WF50 | - | - | - | - | - | - | 106 | 106 | 12 | 3/4X3 | A |
| 3196 | - | 100 | 36 | 16B26 | - | - | - | - | - | - | 342 | 342 | - | - | |
| 3197 | - | 100 | 50 | 21WF55 | - | - | - | - | - | - | 106 | 106 | 20 | 3/4X3 | |
| 3198 | - | 100 | 50 | 21WF55 | - | - | - | - | - | - | 106 | 106 | 20 | 3/4X3 | |
| 3199 | - | 100 | 50 | 21WF55 | - | - | - | - | - | - | 106 | 106 | 20 | 3/4X3 | |

LICENSED PROFESSIONAL ENGINEER — LESLIE E. ROBERTSON — No. 34360 — UNIVERSITY OF THE STATE OF NEW YORK

**SKILLING-HELLE-CHRISTIANSEN-ROBERTSON** — **Civil & Structural Engineers**

PROJECT: THE WORLD TRADE CENTER | TITLE: BEAM SCHEDULE TOWERS A AND B | DATE: 1/22/68

REVISIONS

| BEAM NO. | SIZE | TYPE | FY | SHAPE | PLATE 1 WIDTH | PLATE 1 THICK | PLATE 2 WIDTH | PLATE 2 THICK | DIMENSIONS LENGTH | DIMENSIONS DIM. A | SUPPORTS LEFT | SUPPORTS RIGHT | STUDS NO. | STUDS SIZE | REMARKS |
|---|---|---|---|---|---|---|---|---|---|---|---|---|---|---|---|
| 3200 | - | 100 | 50 | 30WF116 | - | - | - | - | - | - | 314 | 106 | 20 | 3/4X3 | |
| 3201 | - | 100 | 50 | 21WF62 | - | - | - | - | - | - | 35.3K | 292 | 26 | 3/4X3 | |
| 3202 | - | 100 | 36 | 16B26 | - | - | - | - | - | - | 208 | 216 | 8 | 3/4X3 | |
| 3203 | 16X7 WF | 402 | 50 | 12WF40 | 6 | 3/4 | - | - | - | - | 26.5K | 26.5K | 47 | 3/4X3 | |
| 3204 | - | 100 | 50 | 30WF116 | - | - | - | - | - | - | 106 | 314 | 20 | 3/4X3 | |
| 3205 | - | 100 | 50 | 30WF116 | - | - | - | - | - | - | 106 | 106 | 20 | 3/4X3 | |
| 3206 | - | 100 | 50 | 21WF62 | - | - | - | - | - | - | 106 | 106 | 42 | 3/4X3 | |
| 3207 | - | 100 | 50 | 16WF40 | - | - | - | - | - | - | 26.5K | 26.5K | 20 | 3/4X3 | |
| 3208 | - | 100 | 36 | 12B16.5 | - | - | - | - | - | - | 339 | 346 | - | - | |
| 3209 | - | 404 | 36 | 18WF45 | - | - | - | - | - | - | 26.5K | 26.5K | 26 | 3/4X3 | |
| 3210 | - | 100 | 50 | 30WF116 | - | - | - | - | - | - | 106 | 106 | 20 | 3/4X3 | |
| 3211 | - | 100 | 50 | 21WF55 | - | - | - | - | - | - | 106 | 106 | 54 | 3/4X3 | |
| 3212 | - | 100 | 50 | 21WF55 | - | - | - | - | - | - | 106 | 214 | 12 | 3/4X3 | C |
| 3213 | - | 100 | 50 | 21WF55 | - | - | - | - | - | - | 35.3K | 35.3K | 20 | 3/4X3 | |
| 3214 | - | 100 | 36 | 16B26 | - | - | - | - | - | - | 216 | 266 | 8 | 3/4X3 | |
| 3215 | 21X7 BU | 300 | 36 | - | 7 | 1 | 19-1/2 | 3/8 | - | - | 266 | 106 | - | - | |
| 3216 | - | 100 | 50 | 24WF84 | - | - | - | - | - | - | 106 | 106 | 20 | 3/4X3 | |
| 3217 | - | 100 | 50 | 21WF55 | - | - | - | - | - | - | 106 | 106 | 57 | 3/4X3 | |
| 3218 | - | 100 | 36 | 16B31 | - | - | - | - | - | - | 453 | 26.5K | - | - | |
| 3219 | - | 100 | 36 | 16B31 | - | - | - | - | - | - | 26.5K | 26.5K | - | - | |
| 3220 | - | 100 | 36 | 16WF58 | - | - | - | - | - | - | 357 | 106 | - | - | |
| 3221 | - | 100 | 36 | 16WF58 | - | - | - | - | - | - | 106 | 106 | - | - | |
| 3222 | - | 100 | 36 | 16WF58 | - | - | - | - | - | - | 106 | 106 | - | - | |
| 3223 | - | 100 | 36 | 16WF58 | - | - | - | - | - | - | 106 | 106 | - | - | |
| 3224 | - | 100 | 36 | 16WF58 | - | - | - | - | - | - | 106 | 314 | 15 | 3/4X3 | |
| 3225 | - | 100 | 36 | 12B16.5 | - | - | - | - | - | - | 26.5K | 26.5K | - | - | |
| 3226 | - | 100 | 36 | 14B22 | - | - | - | - | - | - | 26.5K | 26.5K | - | - | |
| 3227 | - | 100 | 36 | 14B22 | - | - | - | - | - | - | 105 | 201 | - | - | |
| 3228 | - | 100 | 36 | 14B22 | - | - | - | - | - | - | 216 | 26.5K | - | - | |
| 3229 | - | 100 | 36 | 12WF31 | - | - | - | - | - | - | 102 | 102 | 12 | 3/4X3 | |
| 3230 | - | 100 | 36 | 16WF50 | - | - | - | - | - | - | 106 | 314 | 30 | 3/4X3 | |
| 3231 | - | 100 | 36 | 10WF25 | - | - | - | - | - | - | 505 | 511 | 30 | 3/4X3 | |
| 3232 | - | 100 | 50 | 12B19 | - | - | - | - | - | - | 106 | 26.5K | 8 | 304X3 | |
| 3233 | - | 100 | 50 | 16B26 | - | - | - | - | - | - | 105 | 26.5K | 40 | 3/4X3 | |

LICENSED PROFESSIONAL ENG. LESLIE E. ROBERTSON No. 84360 UNIVERSITY OF THE STATE OF NEW YORK

P-AB1-57

**SKILLING-HELLE-CHRISTIANSEN-ROBERTSON** **Civil & Structural Engineers**

PROJECT: THE WORLD TRADE CENTER | TITLE: BEAM SCHEDULE TOWERS A AND B | DATE: 1/22/68

REVISIONS

| BEAM NO. | SIZE | TYPE | FY | SHAPE | PLATE 1 WIDTH | PLATE 1 THICK | PLATE 2 WIDTH | PLATE 2 THICK | DIMENSIONS LENGTH | DIMENSIONS DIM. A | SUPPORTS LEFT | SUPPORTS RIGHT | STUDS NO. | STUDS SIZE | REMARKS |
|---|---|---|---|---|---|---|---|---|---|---|---|---|---|---|---|
| 3234 | - | 100 | 36 | 16B26 | - | - | - | - | - | - | 106 | 106 | - | - | |
| 3235 | - | 100 | 36 | 16B26 | - | - | - | - | - | - | 26.5K | 105 | 26 | 3/4X3 | |
| 3236 | - | 100 | 50 | 16B26 | - | - | - | - | - | - | 106 | 201 | 40 | 3/4X3 | |
| 3237 | - | 100 | 36 | 16WF36 | - | - | - | - | - | - | 26.5K | 26.5K | - | - | |
| 3238 | - | 100 | 50 | 16B26 | - | - | - | - | - | - | 105 | 201 | 40 | 3/4X3 | |
| 3239 | - | 100 | 36 | 14B22 | - | - | - | - | - | - | 216 | 269 | 16 | 3/4X3 | X |
| 3240 | - | 100 | 50 | 12B16.5 | - | - | - | - | - | - | 26.5K | 26.5K | 26 | 3/4X3 | |
| 3241 | - | 100 | 50 | 16B26 | - | - | - | - | - | - | 105 | 201 | 16 | 3/4X3 | |
| 3242 | - | 100 | 36 | 10WF21 | - | - | - | - | - | - | 17.4K | 17.4K | 30 | 3/4X3 | |
| 3243 | - | 100 | 50 | 16B26 | - | - | - | - | - | - | 26.5K | 106 | 40 | 3/4X3 | |
| 3244 | - | 100 | 50 | 16B26 | - | - | - | - | - | - | 26.5K | 26.5K | 40 | 3/4X3 | |
| 3245 | - | 100 | 36 | 18WF45 | - | - | - | - | - | - | 26.5K | 26.5K | - | - | |
| 3246 | - | 100 | 36 | 18WF45 | - | - | - | - | - | - | 26.5K | 26.5K | - | - | |
| 3247 | - | 100 | 36 | 24WF110 | - | - | - | - | - | - | 35.3K | 35.3K | - | - | |
| 3248 | - | 100 | 36 | 30WF108 | - | - | - | - | - | - | 44.2K | 201 | - | - | |
| 3249 | - | 100 | 36 | 30WF99 | - | - | - | - | - | - | 201 | 201 | - | - | |
| 3250 | - | 100 | 36 | 12CH20.7 | - | - | - | - | - | - | 26.5K | 26.5K | - | - | |
| 3251 | 30X6 BU | 300 | 36 | - | 6 | 1- 3/4 | 26-1/2 | 3/4 | - | - | 44.2K | 201 | - | - | |
| 3252 | 30X6 BU | 300 | 36 | - | 6 | 1- 3/4 | 26-1/2 | 3/4 | - | - | 346 | 201 | - | - | |
| 3253 | 38X7 BU | 301 | 36 | - | 7 | 1- 1/2 | 35 | 5/8 | - | - | . K | . K | - | - | |
| 3254 | 20X7 BU | 300 | 36 | - | 7 | 1- 1/2 | 17 | 1/2 | - | - | 105 | 26.5K | - | - | |
| 3255 | - | 100 | 50 | 16WF36 | - | - | - | - | - | - | 106 | 106 | 47 | 3/4X3 | |
| 3256 | - | 100 | 36 | 21WF55 | - | - | - | - | - | - | 105 | 35.3K | - | - | |
| 3257 | - | 100 | 36 | 16WF40 | - | - | - | - | - | - | 106 | 106 | - | - | |
| 3258 | - | 100 | 36 | 16WF40 | - | - | - | - | - | - | 314 | 106 | 36 | 3/4X3 | |
| 3259 | - | 100 | 36 | 16WF58 | - | - | - | - | - | - | 354 | 106 | - | - | |
| 3260 | - | 100 | 36 | 16WF58 | - | - | - | - | - | - | 106 | 336 | - | - | |
| 3261 | - | 100 | 36 | 16WF58 | - | - | - | - | - | - | 106 | 106 | - | - | |
| 3262 | - | 100 | 36 | 12WF27 | - | - | - | - | - | - | 105 | 201 | - | - | |
| 3263 | - | 100 | 36 | 12WF45 | - | - | - | - | - | - | 105 | 314 | - | - | |
| 3264 | - | 100 | 36 | 16WF50 | - | - | - | - | - | - | 314 | 106 | - | - | |
| 3265 | - | 100 | 36 | 16WF50 | - | - | - | - | - | - | 106 | 106 | - | - | |
| 3266 | - | 100 | 36 | 12WF27 | - | - | - | - | - | - | 105 | 105 | - | - | |

REMARKS

1 REINF. PLATES 6-6 X 3/4

LICENSED PROFESSIONAL ENGINEER LESLIE E. ROBERTSON No. 34360 UNIVERSITY OF THE STATE OF NEW YORK

5-6-1-68

**SKILLING-HELLE-CHRISTIANSEN-ROBERTSON** — **Civil & Structural Engineers**

| PROJECT | TITLE | DATE |
|---|---|---|
| THE WORLD TRADE CENTER | BEAM SCHEDULE TOWERS A AND B | 1/22/68 |

REVISIONS

| BEAM NO. | SIZE | TYPE | FY | PLATE 1 SHAPE | PLATE 1 WIDTH | PLATE 1 THICK | PLATE 2 WIDTH | PLATE 2 THICK | DIMENSIONS LENGTH | DIMENSIONS DIM. A | SUPPORTS LEFT | SUPPORTS RIGHT | STUDS NO. | STUDS SIZE | REMARKS |
|---|---|---|---|---|---|---|---|---|---|---|---|---|---|---|---|
| 3267 | - | 100 | 36 | 12WF27 | - | - | - | - | - | - | 105 | 105 | - | - | |
| 3268 | - | 100 | 36 | 12WF27 | - | - | - | - | - | - | 26.5K | 26.5K | - | - | |
| 3269 | - | 100 | 36 | 16WF45 | - | - | - | - | - | - | 26.5K | 26.5K | - | - | |
| 3270 | - | 100 | 36 | 18WF50 | - | - | - | - | - | - | 106 | 106 | - | - | |
| 3271 | 18X4 BU | 300 | 36 | - | 4 | 1 | 16 | 3/8 | - | - | 357 | 201 | - | - | |
| 3272 | - | 100 | 36 | 14B22 | - | - | - | - | - | - | 26.5K | 213 | - | - | |
| 3273 | - | 100 | 36 | 16B26 | - | - | - | - | - | - | 339 | 105 | - | - | |
| 3274 | - | 100 | 50 | 16WF36 | - | - | - | - | - | - | 105 | 26.5K | 47 | 3/4X3 | |
| 3275 | - | 100 | 50 | 16WF45 | - | - | - | - | - | - | 26.5K | 26.5K | 39 | 3/4X3 | |
| 3276 | - | 100 | 50 | 16WF36 | - | - | - | - | - | - | 342 | 26.5K | 47 | 3/4X3 | |
| 3277 | - | 100 | 50 | 16WF36 | - | - | - | - | - | - | 26.5K | 105 | 47 | 3/4X3 | |
| 3278 | - | 100 | 50 | 14B22 | - | - | - | - | - | - | 26.5K | 357 | 34 | 3/4X3 | |
| 3279 | - | 100 | 36 | 12B16.5 | - | - | - | - | - | - | 339 | 346 | - | - | |
| 3280 | - | 100 | 36 | 16WF58 | - | - | - | - | - | - | 106 | 106 | - | - | |
| 3281 | - | 100 | 36 | 16WF58 | - | - | - | - | - | - | 106 | 214 | 20 | 3/4X3 | |
| 3282 | - | 100 | 36 | 16WF58 | - | - | - | - | - | - | 295 | 295 | - | - | |
| 3283 | - | 100 | 36 | 16WF58 | - | - | - | - | - | - | 336 | 106 | - | - | |
| 3284 | - | 100 | 36 | 12WF45 | - | - | - | - | - | - | 314 | 105 | - | - | |
| 3285 | - | 100 | 36 | 12WF27 | - | - | - | - | - | - | 201 | 105 | - | - | |
| 3286 | - | 100 | 50 | 16WF36 | - | - | - | - | - | - | 26.5K | 26.5K | 56 | 3/4X3 | |
| 3287 | - | 100 | 36 | 16WF40 | - | - | - | - | - | - | 26.5K | 26.5K | - | - | |
| 3288 | - | 100 | 36 | 16WF40 | - | - | - | - | - | - | 26.5K | 26.5K | 39 | 3/4X3 | |
| 3289 | - | 100 | 50 | 16WF40 | - | - | - | - | - | - | 106 | 314 | 62 | 3/4X3 | |
| 3290 | - | 100 | 50 | 16WF40 | - | - | - | - | - | - | 201 | 105 | 62 | 3/4X3 | |
| 3291 | - | 100 | 50 | 16WF40 | - | - | - | - | - | - | 26.5K | 342 | 19 | 3/4X3 | |
| 3292 | - | 100 | 36 | 14B22 | - | - | - | - | - | - | 106 | 269 | - | - | |
| 3293 | - | 100 | 36 | 14B22 | - | - | - | - | - | - | 216 | 216 | - | - | |
| 3294 | - | 100 | 36 | 16B26 | - | - | - | - | - | - | 342 | 214 | - | - | |
| 3295 | 30X7 BU | 300 | 36 | - | 7 | 1- 1/2 | 27 | 1/2 | - | - | 214 | 106 | - | - | |
| 3296 | 30X7 BU | 300 | 36 | - | 7 | 1- 1/2 | 27 | 1/2 | - | - | 106 | 106 | - | - | |
| 3297 | - | 100 | 36 | 16WF58 | - | - | - | - | - | - | 106 | 106 | - | - | |
| 3298 | - | 100 | 36 | 16WF58 | - | - | - | - | - | - | 295 | 295 | - | - | |
| 3299 | - | 100 | 36 | 16WF58 | - | - | - | - | - | - | 106 | 106 | - | - | |

LICENSED PROFESSIONAL ENG. LESLIE E. ROBERTSON No. 34360 STATE OF NEW YORK

2-A-1-69

**SKILLING-HELLE-CHRISTIANSEN-ROBERTSON** — **Civil & Structural Engineers**

PROJECT: THE WORLD TRADE CENTER | TITLE: BEAM SCHEDULE TOWERS A AND B | DATE: 1/22/68

REVISIONS

| BEAM NO. | SIZE | TYPE | FY | PLATE 1 SHAPE | PLATE 1 WIDTH | PLATE 1 THICK | PLATE 2 WIDTH | PLATE 2 THICK | DIMENSIONS LENGTH | DIMENSIONS DIM. A | SUPPORTS LEFT | SUPPORTS RIGHT | STUDS NO. | STUDS SIZE | REMARKS |
|---|---|---|---|---|---|---|---|---|---|---|---|---|---|---|---|
| 3300 | - | 100 | 36 | 16WF58 | - | - | - | - | - | - | 106 | 357 | - | - | |
| 3301 | - | 100 | 50 | 14B22 | - | - | - | - | - | - | 26.5K | 26.5K | 34 | 3/4X3 | |
| 3302 | - | 100 | 36 | 12WF27 | - | - | - | - | - | - | 201 | 105 | - | - | |
| 3303 | - | 100 | 36 | 12WF27 | - | - | - | - | - | - | 201 | 105 | - | - | |
| 3304 | - | 100 | 36 | 10WF21 | - | - | - | - | - | - | 17.4K | 17.4K | - | - | |
| 3305 | - | 100 | 36 | 10WF21 | - | - | - | - | - | - | 17.4K | 17.4K | - | - | |
| 3306 | - | 100 | 50 | 16B26 | - | - | - | - | - | - | 26.5K | 26.5K | 40 | 3/4X3 | |
| 3307 | - | 100 | 50 | 16B26 | - | - | - | - | - | - | 105 | 201 | 40 | 3/4X3 | |
| 3308 | - | 100 | 50 | 16B26 | - | - | - | - | - | - | 26.5K | 26.5K | 40 | 3/4X3 | |
| 3309 | - | 100 | 50 | 16B26 | - | - | - | - | - | - | 26.5K | 26.5K | 40 | 3/4X3 | |
| 3310 | - | 100 | 36 | 16B26 | - | - | - | - | - | - | 26.5K | 26.5K | - | - | |
| 3311 | - | 100 | 36 | 16B26 | - | - | - | - | - | - | 26.5K | 26.5K | - | - | |
| 3312 | - | 100 | 50 | 16B26 | - | - | - | - | - | - | 105 | 201 | 40 | 3/4X3 | |
| 3313 | - | 100 | 36 | 16B26 | - | - | - | - | - | - | 216 | 269 | 34 | 3/4X3 | |
| 3314 | - | 100 | 36 | 16B26 | - | - | - | - | - | - | 105 | 201 | - | - | |
| 3315 | - | 100 | 50 | 16B26 | - | - | - | - | - | - | 26.5K | 26.5K | 40 | 3/4X3 | |
| 3316 | - | 100 | 50 | 16B26 | - | - | - | - | - | - | 105 | 201 | 40 | 3/4X3 | |
| 3317 | - | 100 | 50 | 16B26 | - | - | - | - | - | - | 26.5K | 26.5K | 40 | 3/4X3 | |
| 3318 | - | 100 | 50 | 16B26 | - | - | - | - | - | - | 26.5K | 26.5K | 40 | 3/4X3 | |
| 3319 | - | 100 | 50 | 16B26 | - | - | - | - | - | - | 105 | 201 | 40 | 3/4X3 | |
| 3320 | - | 100 | 50 | 16B26 | - | - | - | - | - | - | 26.5K | 26.5K | 40 | 3/4X3 | |
| 3321 | - | 100 | 50 | 16B26 | - | - | - | - | - | - | 26.5K | 26.5K | 40 | 3/4X3 | |
| 3322 | - | 100 | 50 | 16B26 | - | - | - | - | - | - | 26.5K | 105 | 40 | 3/4X3 | |
| 3323 | - | 100 | 36 | 16WF40 | - | - | - | - | - | - | 26.5K | 26.5K | - | - | |
| 3324 | - | 100 | 36 | 21WF62 | - | - | - | - | - | - | 44.2K | 44.2K | - | - | |
| 3325 | - | 100 | 50 | 16B26 | - | - | - | - | - | - | 26.5K | 26.5K | 40 | 3/4X3 | |
| 3326 | - | 100 | 36 | 10WF21 | - | - | - | - | - | - | 354 | 17.4K | - | - | |
| 3327 | - | 100 | 36 | 30WF116 | - | - | - | - | - | - | 494 | 494 | 30 | 3/4X3 | |
| 3328 | - | 100 | 36 | 30WF116 | - | - | - | - | - | - | 494 | 494 | 30 | 3/4X3 | |
| 3329 | - | 100 | 50 | 16B26 | - | - | - | - | - | - | 26.5K | 105 | 40 | 3/4X3 | |
| 3330 | - | 100 | 50 | 21WF62 | - | - | - | - | - | - | 105 | 35.3K | (22) | 3/4X3 | |
| 3331 | 20X6 BU | 300 | 36 | - | 6 | 1 | 18 | 3/8 | - | - | 105 | 26.5K | - | - | |
| 3332 | - | 100 | 50 | 16WF58 | - | - | - | - | - | - | 360 | 201 | 30 | 3/4X3 | |
| 3333 | - | 100 | 50 | 16B26 | - | - | - | - | - | - | 106 | 201 | 40 | 3/4X3 | |

LICENSED PROFESSIONAL ENGINEER — LESLIE E. ROBERTSON — No. 34360 — STATE OF NEW YORK

**WORTHINGTON, SKILLING, HELLE & JACKSON** — Civil & Structural Engineers

| PROJECT | TITLE | DATE |
|---|---|---|
| THE WORLD TRADE CENTER | BEAM SCHEDULE TOWERS A AND B | 7/20/67 |

REVISIONS

| | BEAM NO. | SIZE | TYPE | FY | PLATE 1 SHAPE | PLATE 1 WIDTH | PLATE 1 THICK | PLATE 2 WIDTH | PLATE 2 THICK | DIMENSIONS LENGTH | DIMENSIONS DIM. A | SUPPORTS LEFT | SUPPORTS RIGHT | STUDS NO. | STUDS SIZE | REMARKS |
|---|---|---|---|---|---|---|---|---|---|---|---|---|---|---|---|---|
| | 3334 | - | 100 | 50 | 16B26 | - | - | - | - | - | - | 105 | 201 | 40 | 3/4X3 | |
| | 3335 | - | 100 | 50 | 16WF36 | - | - | - | - | - | - | 456 | 105 | 30 | 3/4X3 | |
| | 3336 | - | 100 | 50 | 12B16.5 | - | - | - | - | - | - | 106 | 26.5K | - | - | |
| | 3337 | - | 100 | 50 | 16B26 | - | - | - | - | - | - | 26.5K | 26.5K | 40 | 3/4X3 | |
| | 3338 | - | 100 | 50 | 16B26 | - | - | - | - | - | - | 26.5K | 105 | 40 | 3/4X3 | |
| | 3339 | - | 100 | 50 | 16B26 | - | - | - | - | - | - | 26.5K | 26.5K | 40 | 3/4X3 | |
| | 3340 | - | 100 | 50 | 16B26 | - | - | - | - | - | - | 105 | 26.5K | 40 | 3/4X3 | |
| * | 3341 | - | 100 | 50 | 16B26 | - | - | - | - | - | - | 26.5K | 26.5K | 40 | 3/4X3 | |
| * | 3342 | - | 100 | 50 | 16B26 | - | - | - | - | - | - | 26.5K | 26.5K | 40 | 3/4X3 | |
| * | 3343 | - | 100 | 50 | 16B26 | - | - | - | - | - | - | 26.5K | 26.5K | 40 | 3/4X3 | |
| | 3344 | - | 100 | 50 | 16B26 | - | - | - | - | - | - | 105 | 26.5K | 40 | 3/4X3 | |
| | 3345 | - | 100 | 50 | 16B26 | - | - | - | - | - | - | 26.5K | 105 | 40 | 3/4X3 | |
| | 3346 | - | 100 | 50 | 16B26 | - | - | - | - | - | - | 26.5K | 26.5K | 40 | 3/4X3 | |
| | 3347 | - | 100 | 36 | 30WF99 | - | - | - | - | - | - | 201 | 26.5K | - | - | |
| * | 3348 | - | 100 | 36 | 16B26 | - | - | - | - | - | - | 26.5K | 26.5K | - | - | |
| | 3349 | - | 100 | 36 | 16WF36 | - | - | - | - | - | - | 216 | 523 | - | - | |
| | 3350 | - | 100 | 36 | 12CH20.7 | - | - | - | - | - | - | 26.5K | 26.5K | - | - | |
| | 3351 | - | 100 | 36 | 16B26 | - | - | - | - | - | - | 266 | 357 | - | - | |
| | 3352 | - | 100 | 36 | 16B26 | - | - | - | - | - | - | 26.5K | 26.5K | - | - | |
| | 3353 | - | 100 | 36 | 16WF36 | - | - | - | - | - | - | 523 | 456 | - | - | |
| | 3354 | - | 100 | 36 | 16B26 | - | - | - | - | - | - | 105 | 105 | - | - | |
| | 3355 | - | 100 | 36 | 16B26 | - | - | - | - | - | - | 105 | 105 | - | - | |
| | 3356 | - | 100 | 36 | 12B16.5 | - | - | - | - | - | - | 105 | 105 | - | - | |
| | 3357 | - | 100 | 36 | 12B16.5 | - | - | - | - | - | - | 105 | 105 | - | - | |
| | 3358 | - | 100 | 50 | 16B26 | - | - | - | - | - | - | 26.5K | 201 | - | - | |
| | 3359 | - | 100 | 50 | 16B26 | - | - | - | - | - | - | 105 | 26.5K | - | - | |
| | 3360 | - | 100 | 50 | 16B26 | - | - | - | - | - | - | 26.5K | 26.5K | - | - | |
| | 3361 | - | 100 | 50 | 16B26 | - | - | - | - | - | - | 26.5K | 105 | - | - | |
| | 3362 | - | 100 | 50 | 16B26 | - | - | - | - | - | - | 105 | 26.5K | - | - | |
| | 3363 | - | 100 | 36 | 8B13 | - | - | - | - | - | - | 466 | 466 | - | - | |
| * | 3364 | - | 100 | 50 | 16B26 | - | - | - | - | - | - | 26.5K | 26.5K | - | - | |
| | 3365 | - | 100 | 50 | 16B26 | - | - | - | - | - | - | 201 | 105 | - | - | |
| | 3366 | - | 100 | 50 | 16B26 | - | - | - | - | - | - | 26.5K | 26.5K | - | - | |

LICENSED PROFESSIONAL ENGINEER LESLIE E. ROBERTSON No. 34360 STATE OF NEW YORK

REMARKS

* Hold

5-AB1-101

**SKILLING-HELLE-CHRISTIANSEN-ROBERTSON** — **Civil & Structural Engineers**

PROJECT: THE WORLD TRADE CENTER | TITLE: BEAM SCHEDULE TOWERS A AND B | DATE: 1/22/68

REVISIONS

| BEAM NO. | SIZE | TYPE | FY | SHAPE | PLATE 1 WIDTH | PLATE 1 THICK | PLATE 2 WIDTH | PLATE 2 THICK | DIMENSIONS LENGTH | DIMENSIONS DIM. A | SUPPORTS LEFT | SUPPORTS RIGHT | STUDS NO. | STUDS SIZE | REMARKS |
|---|---|---|---|---|---|---|---|---|---|---|---|---|---|---|---|
| 3367 | - | 100 | 50 | 16B26 | - | - | - | - | - | - | 26.5K | 26.5K | - | - | |
| 3368 | 30X10BU | 300 | 36 | - | 10 | 1- 1/2 | 27 | 3/4 | - | - | 44.2K | 44.2K | - | - | |
| 3369 | - | 100 | 50 | 30WF108 | - | - | - | - | - | - | 17.4K | 17.4K | - | - | |
| 3370 | - | 100 | 36 | 30WF116 | - | - | - | - | - | - | 105 | 201 | - | - | |
| 3371 | 3 X7 BU | 300 | 36 | - | 7 | 1- 1/2 | 27 | 3/4 | - | - | 289 | 483 | | | |
| 3372 | - | 100 | 50 | 16B26 | - | - | - | - | - | - | 26.5K | 26.5K | - | - | |
| 3373 | - | 100 | 50 | 16B26 | - | - | - | - | - | - | 26.5K | 26.5K | - | - | |
| 3374 | - | 100 | 50 | 16B26 | - | - | - | - | - | - | 201 | 105 | | | |
| 3375 | - | 100 | 50 | 16B26 | - | - | - | - | | - | 26.5K | 26.5K | - | - | |
| 3376 | - | 100 | 50 | 16B26 | - | - | - | - | - | - | 26.5K | 26.5K | 40 | 3/4X3 | |
| 3377 | - | 100 | 50 | 16B26 | - | - | - | - | - | - | 201 | 105 | 40 | 3/4X3 | |
| 3378 | - | 100 | 50 | 16B26 | - | - | - | - | - | - | 26.5K | 26.5K | 40 | 3/4X3 | |
| 3379 | - | 100 | 50 | 21WF55 | - | - | - | - | - | - | 106 | 106 | 20 | 3/4X3 | |
| 3380 | - | 100 | 50 | 21WF55 | - | - | - | - | - | - | 106 | 106 | 20 | 3/4X3 | |
| 3381 | - | 100 | 36 | 16B26 | - | - | - | - | - | - | 106 | 106 | 24 | 3/4X3 | |
| 3382 | - | 100 | 36 | 16B26 | - | - | - | - | - | - | 216 | 106 | 8 | 3/4X3 | |
| 3383 | - | 100 | 50 | 21WF55 | - | - | - | - | - | - | 106 | 106 | 20 | 3/4X3 | |
| 3384 | - | 100 | 50 | 21WF55 | - | - | - | - | - | - | 106 | 106 | 20 | 3/4X3 | |
| 3385 | - | 100 | 50 | 21WF55 | - | - | - | - | - | - | 106 | 106 | 20 | 3/4X3 | |
| 3386 | - | 100 | 36 | 30WF116 | - | - | - | - | - | - | 314 | 106 | 26 | 3/4X3 | |
| 3387 | - | 100 | 36 | 16WF36 | - | - | - | - | - | - | 105 | 106 | 8 | 3/4X3 | |
| 3388 | - | 100 | 50 | 24WF68 | - | - | - | - | - | - | 106 | 106 | 26 | 3/4X3 | |
| 3389 | - | 100 | 36 | 30WF116 | - | - | - | - | - | - | 106 | 314 | 26 | 3/4X3 | |
| 3390 | - | 100 | 36 | 30WF116 | - | - | - | - | - | - | 106 | 106 | 26 | 3/4X3 | |
| 3391 | - | 100 | 36 | 27WF84 | - | - | - | - | - | - | 106 | 106 | 26 | 3/4X3 | |
| 3392 | 24X7-1/28X | 250 | 36 | - | 7-1/2 | 7/8 | 22-1/4 | 1/2 | - | - | 340 | 341 | - | - | |
| 3393 | - | 100 | 50 | 16B26 | - | - | - | - | - | - | 341 | 295 | - | - | |
| 3394 | - | 100 | 50 | 24WF68 | - | - | - | - | - | - | 106 | 106 | 26 | 3/4X3 | |
| 3395 | - | 100 | 36 | 30WF116 | - | - | - | - | - | - | 106 | 106 | 26 | 3/4X3 | |
| 3396 | - | 100 | 50 | 21WF55 | - | - | - | - | - | - | 106 | 106 | 20 | 3/4X3 | |
| 3397 | - | 100 | 50 | 21WF55 | - | - | - | - | - | - | 106 | 214 | 25 | 3/4X3 | |
| 3398 | - | 100 | 36 | 36WF150 | - | - | - | - | - | - | 483 | 483 | 20 | 3/4X3 | |
| 3399 | - | 100 | 36 | 16WF36 | - | - | - | - | - | - | 216 | 266 | 8 | 3/4X3 | |

LICENSED PROFESSIONAL ENGINEER — LESLIE E. ROBERTSON — No. 34360 — STATE OF NEW YORK

**SKILLING-HELLE-CHRISTIANSEN-ROBERTSON** — **Civil & Structural Engineers**

PROJECT: THE WORLD TRADE CENTER | TITLE: BEAM SCHEDULE TOWERS A AND B | DATE: 1/22/68

REVISIONS

| BEAM NO. | SIZE | TYPE | FY | PLATE 1 SHAPE | PLATE 1 WIDTH | PLATE 1 THICK | PLATE 2 WIDTH | PLATE 2 THICK | DIMENSIONS LENGTH | DIMENSIONS DIM. A | SUPPORTS LEFT | SUPPORTS RIGHT | STUDS NO. | STUDS SIZE | REMARKS |
|---|---|---|---|---|---|---|---|---|---|---|---|---|---|---|---|
| 3400 | - | 100 | 50 | 21WF55 | - | - | - | - | - | - | 266 | 106 | 20 | 3/4X3 | |
| 3401 | - | 100 | 50 | 21WF55 | - | - | - | - | - | - | 106 | 106 | 20 | 3/4X3 | |
| 3402 | - | 100 | 50 | 21WF55 | - | - | - | - | - | - | 106 | 106 | 20 | 3/4X3 | |
| 3403 | - | 404 | 36 | 18WF50 | - | - | - | - | - | - | 26.5K | 274D | 26 | 3/4X3 | |
| 3404 | - | 100 | 36 | 12CH20.7 | - | - | - | - | - | - | 26.5K | 26.5K | - | - | |
| 3405 | - | 100 | 36 | 12WF27 | - | - | - | - | - | - | 26.5K | 26.5K | - | - | X |
| 3406 | - | 100 | 36 | 14WF30 | - | - | - | - | - | - | 172B | 172B | - | - | |
| 3407 | - | 100 | 36 | 14WF30 | - | - | - | - | - | - | 172B | 172B | - | - | |
| 3408 | - | 100 | 36 | 16WF36 | - | - | - | - | - | - | 26.5K | 26.5K | - | - | |
| 3409 | - | 100 | 36 | 8B13 | - | - | - | - | - | - | 17.4K | 17.4K | - | - | |
| 3410 | - | 100 | 36 | 21WF55 | - | - | - | - | - | - | 35.3K | 500 | - | - | |
| 3411 | - | 100 | 36 | 12WF31 | - | - | - | - | - | - | 26.5K | 26.5K | - | - | |
| 3412 | - | 100 | 36 | 12WF31 | - | - | - | - | - | - | 26.5K | 26.5K | - | - | |
| 3413 | - | 100 | 36 | 12B19 | - | - | - | - | - | - | 457 | 26.5K | - | - | |
| 3414 | - | 100 | 36 | 12WF45 | - | - | - | - | - | - | 26.5K | 26.5K | - | - | |
| 3415 | - | 100 | 36 | 16WF36 | - | - | - | - | - | - | 506A | 283U | - | - | |
| 3416 | - | 100 | 36 | 16WF36 | - | - | - | - | - | - | 506B | 283U | - | - | |
| 3417 | - | 100 | 36 | 10WF25 | - | - | - | - | - | - | 506A | 506B | - | - | |
| 3418 | - | 100 | 36 | 16B26 | - | - | - | - | - | - | 314 | 106 | - | - | |
| 3419 | 24X6 BU | 300 | 36 | - | 6 | 1- 1/2 | 21 | 5/8 | - | - | 105 | 201 | - | - | |
| 3420 | - | 100 | 36 | 12WF31 | - | - | - | - | - | - | 26.5K | 26.5K | - | - | |
| 3421 | - | 100 | 36 | 12WF31 | - | - | - | - | - | - | 26.5K | 26.5K | - | - | |
| 3422 | - | 100 | 36 | 9CH13.4 | - | - | - | - | - | - | 363A | 363A | - | - | |
| 3423 | - | 100 | 36 | 10B15 | - | - | - | - | - | - | 26.5K | 26.5K | - | - | |
| 3424 | - | 100 | 36 | 14WF30 | - | - | - | - | - | - | 26.5K | 26.5K | - | - | |
| 3425 | - | 100 | 36 | 12WF27 | - | - | - | - | - | - | 26.5K | 26.5K | - | - | |
| 3426 | - | 100 | 36 | 14WF30 | - | - | - | - | - | - | 508 | 512 | - | - | 1 |
| 3427 | - | 100 | 36 | 14WF30 | - | - | - | - | - | - | 172B | 172B | - | - | |
| 3428 | - | 100 | 36 | 14WF30 | - | - | - | - | - | - | 172B | 172B | - | - | |
| 3429 | - | 100 | 36 | 8B13 | - | - | - | - | - | - | 17.4K | 172C | - | - | |
| 3430 | - | 100 | 36 | 8B13 | - | - | - | - | - | - | 17.4K | 172C | - | - | |
| 3431 | - | 100 | 36 | 8B13 | - | - | - | - | - | - | 17.4K | 172C | - | - | |
| 3432 | - | 100 | 36 | 12WF40 | - | - | - | - | - | - | 370K | 317F | - | - | 2 |
| 3433 | 16X5-1/2BX | 200 | 36 | - | 4 | 3/8 | 16 | 3/4 | - | - | 450 | 450 | - | - | |

REMARKS

1 DETAIL 176A RIGHT END OF BEAM
2 STD. CONN. 26.5K RIGHT END OF BEAM

LICENSED PROFESSIONAL ENGINEER LESLIE E. ROBERTSON No. 34360 UNIVERSITY OF THE STATE OF NEW YORK

**SKILLING-HELLE-CHRISTIANSEN-ROBERTSON** — Civil & Structural Engineers

PROJECT: THE WORLD TRADE CENTER | TITLE: BEAM SCHEDULE TOWERS A AND B | DATE: 2/21/68

REVISIONS

| BEAM NO. | SIZE | TYPE | FY | PLATE 1 SHAPE | PLATE 1 WIDTH | PLATE 1 THICK | PLATE 2 WIDTH | PLATE 2 THICK | DIMENSIONS LENGTH | DIMENSIONS DIM. A | SUPPORTS LEFT | SUPPORTS RIGHT | STUDS NO. | STUDS SIZE | REMARKS |
|---|---|---|---|---|---|---|---|---|---|---|---|---|---|---|---|
| 3434 | - | 100 | 36 | 16WF58 | - | - | - | - | - | - | 220I | 453A | - | - | |
| 3435 | - | 100 | 36 | 16WF58 | - | - | - | - | - | - | 453A | 453A | - | - | |
| 3436 | - | 100 | 36 | 16WF58 | - | - | - | - | - | - | 453A | 26.5K | - | - | |
| 3437 | - | 100 | 36 | 16B31 | - | - | - | - | - | - | 26.5K | 453C | - | - | |
| 3438 | - | 100 | 36 | 16WF58 | - | - | - | - | - | - | 453C | 453A | - | - | |
| 3439 | - | 100 | 36 | 16WF58 | - | - | - | - | - | - | 453A | 220I | - | - | X |
| 3440 | 16X5-1/2BX | 200 | 36 | - | 4 | 1/4 | 16 | 3/4 | - | - | 206A | 247G | - | - | |
| 3441 | - | 100 | 50 | 16B26 | - | - | - | - | - | - | 26.5K | 26.5K | - | - | |
| 3442 | - | 100 | 36 | 16WF40 | - | - | - | - | - | - | 111A | 306D | - | - | |
| 3443 | - | 100 | 50 | 16WF36 | - | - | - | - | - | - | 466A | 26.5K | - | - | |
| 3444 | - | 100 | 50 | 12WF27 | - | - | - | - | - | - | 26.5K | 466A | - | - | |
| 3445 | - | 100 | 36 | 12WF27 | - | - | - | - | - | - | 111M | 111M | - | - | |
| 3446 | - | 100 | 36 | 8B13 | - | - | - | - | - | - | 17.4K | 17.4K | - | - | |
| 3447 | - | 100 | 36 | 12WF45 | - | - | - | - | - | - | 111V | 106N | - | - | |
| 3448 | - | 100 | 36 | 18WF60 | - | - | - | - | - | - | 1118 | 106P | - | - | |
| 3449 | - | 100 | 36 | 30WF108 | - | - | - | - | - | - | 105E | 94.2K | - | - | |
| 3450 | - | 100 | 36 | 16WF58 | - | - | - | - | - | - | 26.5K | 26.5K | - | - | |
| 3451 | 24X6 BU | 300 | 36 | - | 6 | 3/4 | 22-1/2 | 3/8 | - | - | 105E | 94.2K | - | - | |
| 3452 | - | 100 | 50 | 14B22 | - | - | - | - | - | - | 235A | 370K | 34 | 3/4X3 | |
| 3453 | - | 100 | 36 | 16WF58 | - | - | - | - | - | - | 26.5K | 26.5K | - | - | |
| 3454 | 24X6 BU | 300 | 36 | - | 6 | 1- 3/4 | 20-1/2 | 1/2 | - | - | 88.7K | 281A | - | - | |
| 3455 | - | 100 | 36 | 24WF76 | - | - | - | - | - | - | 105E | 105E | - | - | |
| 3456 | 24X6 BU | 300 | 36 | - | 6 | 3/4 | 22-1/2 | 3/8 | - | - | 283V | 281A | - | - | |
| 3457 | - | 100 | 50 | 16WF36 | - | - | - | - | - | - | 252A | 26.5K | 47 | 3/4X3 | |
| 3458 | - | 100 | 50 | 16WF36 | - | - | - | - | - | - | 216A | 26.5K | 47 | 3/4X3 | |
| 3459 | - | 100 | 36 | 12CH20.7 | - | - | - | - | - | - | 26.5K | 26.5K | - | - | |
| 3460 | - | 100 | 36 | 18I70.0 | - | - | - | - | - | - | 281A | 111Q | - | - | |
| 3461 | - | 100 | 36 | 16B26 | - | - | - | - | - | - | 26.5K | 252A | - | - | |
| 3462 | - | 100 | 36 | 12WF27 | - | - | - | - | - | - | 26.5K | 26.5K | - | - | |
| 3463 | - | 100 | 36 | 12WF27 | - | - | - | - | - | - | 105L | 105L | - | - | |
| 3464 | - | 100 | 36 | 14WF30 | - | - | - | - | - | - | 172B | 26.5K | - | - | |
| 3465 | - | 100 | 36 | 14WF30 | - | - | - | - | - | - | 26.5K | 172B | - | - | |
| 3466 | - | 100 | 36 | 12B16.5 | - | - | - | - | - | - | 360A | 214A | - | - | |

LICENSED PROFESSIONAL ENGINEER — LESLIE E. ROBERTSON — No. 34360 — UNIVERSITY OF THE STATE OF NEW YORK

5-AB1-104

**SKILLING-HELLE-CHRISTIANSEN-ROBERTSON** — **Civil & Structural Engineers**

PROJECT: THE WORLD TRADE CENTER | TITLE: BEAM SCHEDULE TOWERS A AND B | DATE: 9/25/68

REVISIONS

| BEAM NO. | SIZE | TYPE | FY | SHAPE | PLATE 1 WIDTH | PLATE 1 THICK | PLATE 2 WIDTH | PLATE 2 THICK | DIMENSIONS LENGTH | DIMENSIONS DIM. A | SUPPORTS LEFT | SUPPORTS RIGHT | STUDS NO. | STUDS SIZE | REMARKS |
|---|---|---|---|---|---|---|---|---|---|---|---|---|---|---|---|
| 3467 | - | 100 | 36 | 16WF36 | - | - | - | - | - | - | 204A | 457A | - | - | |
| 3468 | - | 100 | 50 | 16WF36 | - | - | - | - | - | - | 201F | 170B | 46 | 3/4X3 | |
| 3469 | - | 100 | 50 | 12B19 | - | - | - | - | - | - | 26.5K | 26.5K | 26 | 3/4X3 | |
| 3470 | - | 100 | 36 | 10WF45 | - | - | - | - | - | - | 244A | 244A | - | - | |
| 3471 | - | 100 | 50 | 12B19 | - | - | - | - | - | - | 26.5K | 26.5K | 26 | 3/4X3 | |
| 3472 | - | 100 | 36 | 8B13 | - | - | - | - | - | - | 17.4K | 17.4K | 12 | 3/4X3 | |
| 3473 | - | 100 | 36 | 8B13 | - | - | - | - | - | - | 17.4K | 17.4K | 12 | 3/4X3 | |
| 3474 | - | 100 | 50 | 16WF40 | - | - | - | - | - | - | 106D | 106D | 47 | 3/4X3 | |
| 3475 | - | 100 | 50 | 10WF21 | - | - | - | - | - | - | 508 | 260B | - | - | |
| 3476 | - | 100 | 36 | 10WF45 | - | - | - | - | - | - | 244 | 244 | - | - | |
| 3477 | - | 100 | 36 | 14WF53 | - | - | - | - | - | - | 47.1K | 26.5K | - | - | |
| 3478 | - | 100 | 36 | 12B16.5 | - | - | - | - | - | - | 26.5K | 26.5K | - | - | |
| 3479 | - | 100 | 36 | 10WF45 | - | - | - | - | - | - | 456A | 244A | - | - | |
| 3480 | - | 100 | 36 | 14WF53 | - | - | - | - | - | - | 456N | 26.5K | - | - | |
| 3481 | - | 100 | 36 | 12B16.5 | - | - | - | - | - | - | 26.5K | 26.5K | - | - | |
| 3482 | - | 402 | 36 | 21WF55 | 6 | 3/4 | - | - | 23FT 3 | - | 106P | 111T | 39 | 3/4X3C | |
| 3483 | - | 100 | 36 | 24WF76 | - | - | - | - | - | - | 106P | 111T | - | - | |
| 3484 | - | 100 | 36 | 21WF55 | - | - | - | - | - | - | 35.3K | 35.3K | - | - | |
| 3485 | - | 100 | 36 | 16WF40 | - | - | - | - | - | - | 26.5K | 26.5K | - | - | |
| 3486 | - | 100 | 36 | 12WF45 | - | - | - | - | - | - | 26.5K | 26.5K | - | - | |
| 3487 | - | 100 | 36 | 21WF55 | - | - | - | - | - | - | 35.3K | 111B | - | - | |
| 3488 | - | 100 | 36 | 16WF40 | - | - | - | - | - | - | 111A | 111A | - | - | |
| 3489 | - | 100 | 36 | 12WF27 | - | - | - | - | - | - | 111M | 111M | - | - | |
| 3490 | - | 100 | 36 | 18WF50 | - | - | - | - | - | - | 111A | 306D | - | - | |
| 3491 | - | 100 | 36 | 16WF40 | - | - | - | - | - | - | 306D | 419B | - | - | |
| 3492 | 30X7 8U | 300 | 36 | - | 7 | 3/4 | 28-1/2 | 3/8 | - | - | 205Y | 205U | - | - | |
| 3493 | 30X7 8U | 300 | 36 | - | 7 | 3/4 | 28-1/2 | 3/8 | - | - | 409C | 205U | - | - | 1 |
| 3494 | - | 100 | 36 | 18WF40 | - | - | - | - | - | - | 205I | 205I | - | - | |
| 3495 | - | 100 | 36 | 16WF40 | - | - | - | - | - | - | 401A | 401A | - | - | |
| 3496 | - | 100 | 36 | 16WF40 | - | - | - | - | - | - | 205V | 306D | - | - | |
| 3497 | - | 100 | 50 | 12B22 | - | - | - | - | - | - | 26.5K | 26.5K | - | - | |
| 3498 | - | 100 | 50 | 12B19 | - | - | - | - | - | - | 26.5K | 26.5K | - | - | |
| 3499 | - | 100 | 50 | 12B22 | - | - | - | - | - | - | 173A | 26.5K | 10 | 3/4X3B | |

REMARKS

1 DETAIL 419B RIGHT END OF BEAM

LICENSED PROFESSIONAL ENGINEER ★ LESLIE E. ROBERTSON ★ No. 34360 ★ UNIVERSITY OF THE STATE OF NEW YORK

S-A61-105

**SKILLING-HELLE-CHRISTIANSEN-ROBERTSON** — **Civil & Structural Engineers**

PROJECT: THE WORLD TRADE CENTER | TITLE: BEAM SCHEDULE TOWERS A AND B | DATE: 1/22/68

REVISIONS

| BEAM NO. | SIZE | TYPE | FY | SHAPE | PLATE 1 WIDTH | PLATE 1 THICK | PLATE 2 WIDTH | PLATE 2 THICK | DIMENSIONS LENGTH | DIMENSIONS DIM. A | SUPPORTS LEFT | SUPPORTS RIGHT | STUDS NO. | STUDS SIZE | REMARKS |
|---|---|---|---|---|---|---|---|---|---|---|---|---|---|---|---|
| 3500 | - | 100 | 36 | 24WF94 | - | - | - | - | - | - | 44.2K | 251H | - | - | |
| 3501 | - | 100 | 50 | 12WF85 | - | - | - | - | - | - | 36.1K | 111T | - | - | |
| 3502 | - | 100 | 50 | 12WF31 | - | - | - | - | - | - | 26.5K | 26.5K | - | - | |
| 3503 | - | 100 | 36 | 14B22 | - | - | - | - | - | - | 26.5K | 26.5K | 24 | 3/4X3 | |
| 3504 | - | 100 | 50 | 12B22 | - | - | - | - | - | - | 111I | 26.5K | 34 | 3/4X3 | |
| 3505 | - | 100 | 50 | 16WF40 | - | - | - | - | - | - | 419B | 418A | - | - | |
| 3506 | - | 100 | 50 | 12B22 | - | - | - | - | - | - | 170A | 17.7K | - | - | |
| 3507 | - | 100 | 36 | 16WF36 | - | - | - | - | - | - | 452A | 281F | 33 | 3/4X3 | |
| 3508 | - | 100 | 36 | 8B13 | - | - | - | - | - | - | 17.4K | 172C | - | - | |
| 3509 | - | 100 | 50 | 14B22 | - | - | - | - | - | - | 244B | 26.5K | 15 | 3/4X3 | (8) |
| 3510 | - | 100 | 50 | 14B22 | - | - | - | - | - | - | 26.5K | 26.5K | 34 | 3/4X3 | |
| 3511 | - | 100 | 36 | 12WF40 | - | - | - | - | - | - | 283U | 105L | - | - | |
| 3512 | - | 100 | 36 | 12WF27 | - | - | - | - | - | - | 111I | 201I | - | - | |
| 3513 | 16X5-1/2BX | 202 | 36 | - | 4 | 3/8 | 16 | 3/4 | - | - | 450 | 450 | - | - | |
| 3514 | - | 100 | 36 | 12WF27 | - | - | - | - | - | - | 111I | 111I | - | - | |
| 3515 | - | 100 | 50 | 14B22 | - | - | - | - | - | - | 370K | 26.5K | - | - | |
| 3516 | - | 100 | 50 | 14B22 | - | - | - | - | - | - | 111I | 111I | - | - | |
| 3517 | - | 100 | 50 | 12B19 | - | - | - | - | - | - | 26.5K | 26.5K | - | - | |
| 3518 | - | 100 | 36 | 12WF27 | - | - | - | - | - | - | 111I | 201I | - | - | |
| 3519 | - | 100 | 50 | 12B19 | - | - | - | - | - | - | 26.5K | 26.5K | 30 | 3/4X3 | |
| 3520 | - | 100 | 36 | 12WF27 | - | - | - | - | - | - | 111I | 201I | - | - | |
| 3521 | - | 100 | 36 | 12WF40 | - | - | - | - | - | - | 283U | 105L | - | - | |
| 3522 | - | 100 | 36 | 16WF36 | - | - | - | - | - | - | 252A | 216A | - | - | |
| 3523 | - | 100 | 36 | 14B22 | - | - | - | - | - | - | 111I | 238A | - | - | |
| 3524 | - | 100 | 36 | 18WF60 | - | - | - | - | - | - | 106M | 106M | - | - | |
| 3525 | - | 100 | 36 | 24WF68 | - | - | - | - | - | - | 106P | 260D | - | - | |
| 3526 | 24X7 BU | 300 | 36 | - | 7 | 1- 1/2 | 21 | 1/2 | - | - | 220I | 220H | - | - | |
| 3527 | - | 100 | 36 | 14WF40 | - | - | - | - | - | - | 238D | 106D | 39 | 3/4X3 | |
| 3528 | - | 100 | 36 | 16WF40 | - | - | - | - | - | - | 106D | 106Q | 39 | 3/4X3 | |
| 3529 | - | 100 | 36 | 16WF40 | - | - | - | - | - | - | 106N | 106N | - | - | |
| 3530 | - | 100 | 36 | 16WF58 | - | - | - | - | - | - | 26.5K | 26.5K | - | - | |
| 3531 | - | 100 | 36 | 16WF58 | - | - | - | - | - | - | 26.5K | 26.5K | - | - | |
| 3532 | - | 100 | 36 | 16B31 | - | - | - | - | - | - | 26.5K | 26.5K | - | - | |
| 3533 | - | 100 | 36 | 16WF58 | - | - | - | - | - | - | 26.5K | 26.5K | - | - | |

LICENSED PROFESSIONAL ENG. LESLIE E. ROBERTSON No. 34360 STATE OF NEW YORK

5-4R1-106

**SKILLING-HELLE-CHRISTIANSEN-ROBERTSON** — Civil & Structural Engineers

| PROJECT | TITLE | DATE |
|---|---|---|
| THE WORLD TRADE CENTER | BEAM SCHEDULE TOWERS A AND B | 2/21/68 |

REVISIONS

| BEAM NO. | SIZE | TYPE | FY | SHAPE | PLATE 1 WIDTH | PLATE 1 THICK | PLATE 2 WIDTH | PLATE 2 THICK | DIMENSIONS LENGTH | DIMENSIONS DIM. A | SUPPORTS LEFT | SUPPORTS RIGHT | STUDS NO. | STUDS SIZE | REMARKS |
|---|---|---|---|---|---|---|---|---|---|---|---|---|---|---|---|
| 3534 | - | 100 | 36 | 16WF58 | - | - | - | - | - | - | 26.5K | 26.5K | - | - | |
| 3535 | - | 100 | 36 | 16WF58 | - | - | - | - | - | - | 26.5K | 26.5K | - | - | |
| 3536 | 16X5-1/28X | 204 | 36 | - | 4 | 3/8 | 16 | 3/4 | - | - | 450 | 450 | - | - | |
| 3537 | - | 100 | 50 | 14B22 | - | - | - | - | - | - | 235C | 219A | 34 | 3/4X3 | |
| 3538 | - | 100 | 36 | 16B31 | - | - | - | - | - | - | 220L | 294D | - | - | |
| 3539 | - | 100 | 36 | 16B31 | - | - | - | - | - | - | 294D | 294D | - | - | |
| [illegible] | - | 100 | 36 | [illegible] | - | - | - | - | - | - | 294D | 463C | - | - | |
| [illegible] | - | 100 | 36 | [illegible] | - | - | - | - | - | - | 463C | 294D | - | - | |
| [illegible] | - | 100 | 36 | [illegible] | - | - | - | - | - | - | 294D | 294D | - | - | |
| 3543 | - | 100 | 36 | 16B31 | - | - | - | - | - | - | 294D | 220L | - | - | |
| 3544 | - | 100 | 50 | 12B16.5 | - | - | - | - | - | - | 26.5K | 26.5K | 26 | 3/4X3 | |
| 3545 | - | 100 | 50 | 12B16.5 | - | - | - | - | - | - | 26.5K | 26.5K | 26 | 3/4X3 | |
| 3546 | - | 100 | 36 | 16WF36 | - | - | - | - | - | - | 26.5K | 26.5K | 10 | 3/4X3 | |
| 3547 | - | 100 | 36 | 16WF36 | - | - | - | - | - | - | 26.5K | 26.5K | 10 | 3/4X3 | |
| 3548 | - | 100 | 50 | 12WF31 | - | - | - | - | - | - | 26.5K | 335C | - | - | |
| 3549 | - | 100 | 50 | 12WF31 | - | - | - | - | - | - | 216A | 335C | - | - | |
| 3550 | - | 100 | 50 | 12B16.5 | - | - | - | - | - | - | 26.5K | 26.5K | 26 | 3/4X3 | |
| 3551 | - | 100 | 50 | 12B16.5 | - | - | - | - | - | - | 26.5K | 26.5K | 26 | 3/4X3 | |
| 3552 | - | 100 | 50 | 10WF45 | - | - | - | - | - | - | 283R | 283R | - | - | |
| 3553 | - | 100 | 50 | 14WF53 | - | - | - | - | - | - | 456B | 456F | - | - | |
| 3554 | - | 100 | 36 | 8B13 | - | - | - | - | - | - | 17.4K | 17.4K | 12 | 3/4X3 | |
| [illegible] | - | 100 | 36 | 9CM13.4 | - | - | - | - | - | - | 291A | 363A | - | - | |
| [illegible] | - | 100 | 50 | 10WF45 | - | - | - | - | - | - | 362B | 273A | - | - | |
| [illegible] | - | 100 | 50 | 10WF39 | - | - | - | - | - | - | 362B | 273A | - | - | |
| [illegible] | - | 100 | 36 | 8B13 | - | - | - | - | - | - | 17.4K | 17.4K | - | - | |
| 3559 | - | 100 | 36 | 12B16.5 | - | - | - | - | - | - | 26.5K | 26.5K | - | - | |
| 3560 | - | 100 | 36 | 14WF53 | - | - | - | - | - | - | 456B | 456F | - | - | |
| 3561 | - | 100 | 50 | 10WF45 | - | - | - | - | - | - | 283R | 201I | - | - | |
| 3562 | - | 100 | 36 | 8B13 | - | - | - | - | - | - | 283M | 111N | 12 | 3/4X3 | |
| 3563 | - | 100 | 36 | 8B13 | - | - | - | - | - | - | 17.4K | 105C | - | - | |
| 3564 | - | 100 | 36 | 14B22 | - | - | - | - | - | - | 26.5K | 26.5K | - | - | |
| 3565 | - | 100 | 36 | 8B13 | - | - | - | - | - | - | 291A | 17.4K | 12 | 3/4X3 | |
| 3566 | - | 100 | 36 | 16B26 | - | - | - | - | - | - | 221A | 201F | - | - | |

LICENSED PROFESSIONAL ENGINEER — LESLIE E. ROBERTSON — No. 34360 — STATE OF NEW YORK

S-A81-107

**SKILLING-HELLE-CHRISTIANSEN-ROBERTSON** — **Civil & Structural Engineers**

PROJECT: THE WORLD TRADE CENTER | TITLE: BEAM SCHEDULE TOWERS A AND B | DATE: 9/25/68

REVISIONS

| BEAM NO. | SIZE | TYPE | FY | PLATE 1 SHAPE | PLATE 1 WIDTH | PLATE 1 THICK | PLATE 2 WIDTH | PLATE 2 THICK | DIMENSIONS LENGTH | DIMENSIONS DIM. A | SUPPORTS LEFT | SUPPORTS RIGHT | STUDS NO. | STUDS SIZE | REMARKS |
|---|---|---|---|---|---|---|---|---|---|---|---|---|---|---|---|
| 3567 | - | 100 | 50 | 10WF45 | - | - | - | - | - | - | 201I | 201I | - | - | |
| 3568 | - | 100 | 36 | 16B26 | - | - | - | - | - | - | 26.5K | 26.K5 | - | - | |
| 3569 | - | 100 | 36 | 10B15 | - | - | - | - | - | - | 17.4K | 17.4K | - | - | |
| 3570 | - | 100 | 36 | 6WF20 | - | - | - | - | - | - | 17.4K | 17.4K | - | - | |
| 3571 | - | 100 | 50 | 10WF45 | - | - | - | - | - | - | 362C | 273B | - | - | |
| 3572 | - | 100 | 50 | 18WF45 | - | - | - | - | - | - | 105N | 105N | - | - | |
| 3573 | - | 100 | 36 | 8B13 | - | - | - | - | - | - | 17.4K | 17.4K | 12 | 3/4X3 | |
| 3574 | - | 100 | 50 | 14WF53 | - | - | - | - | - | - | 26.5K | 26.5K | - | - | |
| 3575 | - | 100 | 50 | 18WF45 | - | - | - | - | - | - | 283V | 283V | - | - | |
| 3576 | - | 100 | 50 | 24WF76 | - | - | - | - | - | - | 438 | 273A | 30 | 3/4X3 | |
| 3577 | - | 100 | 50 | 24WF76 | - | - | - | - | - | - | 273A | 35.3K | 30 | 3/4X3 | |
| 3578 | - | 100 | 50 | 24WF76 | - | - | - | - | - | - | 35.3K | 273B | 30 | 3/4X3 | |
| 3579 | - | 100 | 50 | 21WF62 | - | - | - | - | - | - | 273B | 438 | 30 | 3/4X3 | |
| 3580 | - | 100 | 36 | 16WF40 | - | - | - | - | - | - | 220S | 205P | - | - | |
| 3581 | - | 100 | 36 | 16WF40 | - | - | - | - | - | - | 401A | 401A | - | - | |
| 3582 | - | 100 | 36 | 16WF40 | - | - | - | - | - | - | 205F | 335C | - | - | 1 |
| 3583 | - | 100 | 36 | 16WF40 | - | - | - | - | - | - | 335C | 205F | - | - | 2 |
| 3584 | - | 100 | 36 | 16WF40 | - | - | - | - | - | - | 401A | 401A | - | - | |
| 3585 | - | 100 | 36 | 16WF40 | - | - | - | - | - | - | 205P | 220S | - | - | |
| 3586 | - | 100 | 50 | 18WF64 | - | - | - | - | - | - | 201K | 283V | - | - | |
| 3587 | - | 100 | 50 | 18WF85 | - | - | - | - | - | - | 456G | 456B | - | - | |
| 3588 | - | 100 | 50 | 16B26 | - | - | - | - | - | - | 39.8K | 39.8K | - | - | |
| 3589 | - | 100 | 36 | 6WF25 | - | - | - | - | - | - | 17.4K | 17.4K | - | - | |
| 3590 | - | 100 | 50 | 18WF64 | - | - | - | - | - | - | 456H | 362B | - | - | |
| 3591 | - | 100 | 36 | 16WF36 | - | - | - | - | - | - | 26.5K | 27.9K | 30 | 3/4X3 | |
| 3592 | - | 100 | 36 | 14B22 | - | - | - | - | - | - | 26.5K | 26.5K | 19 | 3/4X3 | |
| 3593 | - | 100 | 50 | 16B31 | - | - | - | - | - | - | 39.8K | 39.8K | - | - | |
| 3594 | - | 100 | 50 | 16B26 | - | - | - | - | - | - | 26.5K | 26.5K | - | - | |
| 3595 | - | 100 | 50 | 18WF85 | - | - | - | - | - | - | 456B | 456B | - | - | |
| 3596 | - | 100 | 50 | 18WF64 | - | - | - | - | - | - | 456B | 283V | - | - | |
| 3597 | - | 100 | 50 | 16B26 | - | - | - | - | - | - | 170B | 283S | - | - | |
| 3598 | - | 100 | 50 | 21WF55 | - | - | - | - | - | - | 218C | 35.3K | - | - | |
| 3599 | - | 100 | 36 | 12CH20.7 | - | - | - | - | - | - | 26.5K | 26.5K | - | - | |

REMARKS

1 DETAIL 405 RIGHT END OF BEAM
2 DETAIL 405 LEFT END OF BEAM

LICENSED PROFESSIONAL ENGINEER — LESLIE E. ROBERTSON — No. 94360 — UNIVERSITY OF THE STATE OF NEW YORK

5-AB1-108

**SKILLING-HELLE-CHRISTIANSEN-ROBERTSON** — **Civil & Structural Engineers**

PROJECT: THE WORLD TRADE CENTER | TITLE: BEAM SCHEDULE TOWERS A AND B | DATE: 9/25/68

REVISIONS

| BEAM NO. | SIZE | TYPE | FY | SHAPE | PLATE 1 WIDTH | PLATE 1 THICK | PLATE 2 WIDTH | PLATE 2 THICK | DIMENSIONS LENGTH | DIMENSIONS DIM. A | SUPPORTS LEFT | SUPPORTS RIGHT | STUDS NO. | STUDS SIZE | REMARKS |
|---|---|---|---|---|---|---|---|---|---|---|---|---|---|---|---|
| 3600 | - | 100 | 50 | 16WF36 | - | - | - | - | - | - | 240A | 291A | - | - | |
| 3601 | - | 100 | 36 | 16WF36 | - | - | - | - | - | - | 26.5K | 201F | 30 | 3/4X3 | |
| 3602 | - | 100 | 50 | 18WF64 | - | - | - | - | - | - | 456H | 201J | - | - | |
| 3603 | - | 100 | 36 | 24WF84 | - | - | - | - | - | - | 473B | 482B | 10 | 3/4X3 | |
| 3604 | - | 100 | 50 | 16B26 | - | - | - | - | - | - | 39.8K | 39.8K | 40 | 3/4X3 | |
| 3605 | - | 100 | 50 | 14B22 | - | - | - | - | - | - | 235E | 217B | 34 | 3/4X3 | X |
| 3606 | - | 100 | 50 | 18WF85 | - | - | - | - | - | - | 456I | 362C | - | - | |
| 3607 | - | 100 | 50 | 16WF45 | - | - | - | - | - | - | 456A | 456A | - | - | |
| 3608 | - | 100 | 50 | 14WF53 | - | - | - | - | - | - | 456J | 456B | - | - | |
| 3609 | - | 100 | 50 | 16WF40 | - | - | - | - | - | - | 454A | 26.5K | - | - | |
| 3610 | - | 100 | 50 | 18WF50 | - | - | - | - | - | - | 39.8K | 39.8K | - | - | |
| 3611 | - | 100 | 50 | 16B26 | - | - | - | - | - | - | 39.8K | 39.8K | 32 | 3/4X3 | |
| 3612 | - | 100 | 50 | 18WF85 | - | - | - | - | - | - | 456L | 47.1K | - | - | |
| 3613 | - | 100 | 50 | 18WF64 | - | - | - | - | - | - | 39.8K | 283V | 56 | 3/4X3 | |
| 3614 | - | 100 | 50 | 24WF76 | - | - | - | - | - | - | 111T | 362B | - | - | |
| 3615 | - | 100 | 50 | 24WF76 | - | - | - | - | - | - | 362B | 111T | - | - | |
| 3616 | - | 100 | 50 | 16WF40 | - | - | - | - | - | - | 26.5K | 26.5K | - | - | |
| 3617 | - | 100 | 36 | 16WF36 | - | - | - | - | - | - | 291A | 221A | - | - | |
| 3618 | - | 100 | 50 | 24WF94 | - | - | - | - | - | - | 106H | 362C | - | - | |
| 3619 | - | 100 | 50 | 24WF68 | - | - | - | - | - | - | 35.3K | 70.7K | - | - | |
| 3620 | - | 100 | 50 | 12B19 | - | - | - | - | - | - | 26.5K | 26.5K | 30 | 3/4X3 | |
| 3621 | - | 100 | 50 | 14B22 | - | - | - | - | - | - | 283U | 105L | 16 | 3/4X3 | |
| 3622 | - | 100 | 50 | 16WF36 | - | - | - | - | - | - | 26.5K | 26.5K | - | - | |
| 3623 | - | 100 | 36 | 12B16.5 | - | - | - | - | - | - | 26.5K | 26.5K | - | - | |
| 3624 | 16X5-1/2BX | 202 | 36 | - | 4 | 3/8 | 16 | 3/4 | - | - | 450 | 450 | - | - | |
| 3625 | - | 100 | 36 | 16B31 | - | - | - | - | - | - | 453 | 26.5K | - | - | |
| 3626 | 16X5-1/2BX | 200 | 36 | - | 4 | 3/8 | 16 | 3/4 | - | - | 247A | 247A | - | - | |
| 3627 | - | 100 | 50 | 14B22 | - | - | - | - | - | - | 235E | 218C | 15 | 3/4X3 | |
| 3628 | - | 100 | 50 | 24WF76 | - | - | - | - | - | - | 314A | 314A | - | - | |
| 3629 | - | 100 | 50 | 24WF76 | - | - | - | - | - | - | 106H | 260D | - | - | |
| 3630 | - | 100 | 36 | 16WF40 | - | - | - | - | - | - | 218C | 240A | - | - | |
| 3631 | - | 100 | 36 | 12WF31 | - | - | - | - | - | - | 105K | 216A | - | - | |
| 3632 | - | 100 | 50 | 24179.9 | - | - | - | - | - | - | 220M | 220M | - | - | |
| 3633 | - | 100 | 36 | 14WF34 | - | - | - | - | - | - | - | 111P | 15 | 3/4X3 | (1) |

REMARKS

(1) LEFT SUPPORT, COMBINE DETAILS 111Q AND 111F

LICENSED PROFESSIONAL ENGINEER — LESLIE E. ROBERTSON — No. 34360 — UNIVERSITY OF THE STATE OF NEW YORK

S-A51-109

**SKILLING-HELLE-CHRISTIANSEN-ROBERTSON** — **Civil & Structural Engineers**

| PROJECT | TITLE | DATE |
|---|---|---|
| THE WORLD TRADE CENTER | BEAM SCHEDULE TOWERS A AND B | 3/29/68 |

REVISIONS

| NO. | SIZE | TYPE | FY | SHAPE | PLATE 1 WIDTH | PLATE 1 THICK | PLATE 2 WIDTH | PLATE 2 THICK | DIMENSIONS LENGTH | DIMENSIONS DIM. A | SUPPORTS LEFT | SUPPORTS RIGHT | STUDS NO. | STUDS SIZE | REMARKS |
|---|---|---|---|---|---|---|---|---|---|---|---|---|---|---|---|
| 3634 | - | 100 | 50 | 14B22 | - | - | - | - | - | - | 26.5K | 26.5K | 34 | 3/4X3 | |
| 3635 | 24X6 BU | 300 | 50 | - | 6 | 1 | 22 | 3/8 | - | - | 238D | 106G | - | - | |
| 3636 | - | 100 | 36 | 16B31 | - | - | - | - | - | - | 26.5K | 26.5K | - | - | |
| 3637 | - | 100 | 36 | 16WF36 | - | - | - | - | - | - | 283U | 354C | - | - | |
| 3638 | - | 100 | 50 | 14B22 | - | - | - | - | - | - | 26.5K | 26.5K | - | - | |
| 3639 | - | 100 | 50 | 12B19 | - | - | - | - | - | - | 283U | 105L | 30 | 3/4X3 | |
| 3640 | - | 100 | 50 | 12B19 | - | - | - | - | - | - | 26.5K | 26.5K | 30 | 3/4X3 | |
| 3641 | - | 100 | 50 | 24WR76 | - | - | - | - | - | - | 354C | 106H | - | - | |
| 3642 | - | 100 | 50 | 24WF76 | - | - | - | - | - | - | 106H | 106H | - | - | |
| 3643 | - | 100 | 50 | 24WF76 | - | - | - | - | - | - | 320B | 313C | 26 | 3/4X3 | |
| 3644 | - | 100 | 36 | 21WF55 | - | - | - | - | - | - | 437A | 381A | 22 | 3/4X3 | |
| 4? | - | 100 | 36 | 21WF55 | - | - | - | - | - | - | 438 | 419A | 18 | 3/4X3 | |
| 3646 | - | 100 | 36 | 30WF116 | - | - | - | - | - | - | 317E | 318A | 28 | 3/4X3 | |
| 3647 | - | 100 | 36 | 24WF76 | - | - | - | - | - | - | 320A | 313D | 26 | 3/4X3 | |
| 3648 | - | 100 | 36 | 21WF55 | - | - | - | - | - | - | 437A | 414B | 16 | 3/4X3 | |
| 3649 | - | 100 | 36 | 21WF55 | - | - | - | - | - | - | 438 | 419A | 18 | 3/4X3 | |
| 3650 | - | 100 | 36 | 30WF116 | - | - | - | - | - | - | 317E | 318A | 26 | 3/4X3 | |
| 3651 | - | 100 | 36 | 27WF84 | - | - | - | - | - | - | 318A | 251G | 30 | 3/4X3 | |
| 3652 | - | 100 | 36 | 27WF84 | - | - | - | - | - | - | 430A | 430A | 18 | 3/4X3 | |
| 3653 | - | 100 | 36 | 27WF84 | - | - | - | - | - | - | 251G | 482B | 30 | 3/4X3 | |
| 3654 | - | 100 | 36 | 14WF43 | - | - | - | - | - | - | 26.5K | 26.5K | - | - | |
| 3655 | - | 100 | 36 | 27WR84 | - | - | - | - | - | - | 482B | 251G | 30 | 3/4X3 | |
| 3656 | - | 100 | 36 | 27WF84 | - | - | - | - | - | - | 430A | 430A | 18 | 3/4X3 | |
| 3657 | - | 100 | 36 | 27WR84 | - | - | - | - | - | - | 251G | 318A | 30 | 3/4X3 | |
| 3658 | - | 100 | 36 | 27WF84 | - | - | - | - | - | - | 320B | 205Q | 30 | 3/4X3 | |
| 3659 | - | 100 | 36 | 27WR84 | - | - | - | - | - | - | 430A | 430A | 18 | 3/4X3 | |
| 3660 | - | 100 | 36 | 27WF84 | - | - | - | - | - | - | 205Q | 335L | 34 | 3/4X3 | 1 |
| 3661 | - | 100 | 36 | 27WR84 | - | - | - | - | - | - | 335L | 205Q | 34 | 3/4X3 | 2 |
| 3662 | - | 100 | 36 | 27WR84 | - | - | - | - | - | - | 430A | 430A | 18 | 3/4X3 | |
| 3663 | - | 100 | 36 | 27WF84 | - | - | - | - | - | - | 205Q | 320A | 30 | 3/4X3 | |
| 3664 | - | 100 | 36 | 18154.7 | - | - | - | - | - | - | 273B | 26.5K | - | - | |
| 3665 | - | 100 | 36 | 18154.7 | - | - | - | - | - | - | 273A | 26.5K | - | - | |
| 3666 | - | 100 | 36 | 18154.7 | - | - | - | - | - | - | 105N | 170E | - | - | |

REMARKS

1 DETAIL 430A RIGHT END OF BEAM
2 DETAIL 430A LEFT END OF BEAM

LICENSED PROFESSIONAL ENGINEER LESLIE E. ROBERTSON No. 34360 UNIVERSITY OF THE STATE OF N.Y.

5-AB1-110

**SKILLING, HELLE, CHRISTIANSEN, ROBERTSON** — Structural & Civil Engineers

PROJECT: THE WORLD TRADE CENTER | TITLE: BEAM SCHEDULE TOWERS A AND B | DATE: 11/22/68

REVISIONS

| BEAM NO. | SIZE | TYPE | FY | PLATE 1 SHAPE | PLATE 1 WIDTH | PLATE 1 THICK | PLATE 2 WIDTH | PLATE 2 THICK | DIMENSIONS LENGTH | DIMENSIONS DIM. A | SUPPORTS LEFT | SUPPORTS RIGHT | STUDS NO. | STUDS SIZE | REMARKS |
|---|---|---|---|---|---|---|---|---|---|---|---|---|---|---|---|
| 3667 | - | 100 | 36 | 18I54.7 | - | - | - | - | - | - | 105N | 170E | - | - | |
| 3668 | 16X5-1/2BX | 200 | 36 | - | 4 | 3/8 | 16 | 3/4 | - | - | 206A | 294D | - | - | |
| 3669 | - | 100 | 50 | 12WF27 | - | - | - | - | - | - | 26.5K | 26.5K | 17 | 3/4X3 | |
| 3670 | - | 100 | 50 | 12WF27 | - | - | - | - | - | - | 26.5K | 26.5K | 17 | 3/4X3 | |
| 3671 | - | 100 | 36 | 8WF17 | - | - | - | - | - | - | 26.5K | 26.5K | - | - | |
| 3672 | - | 100 | 36 | 16WF36 | - | - | - | - | - | - | 26.5K | 26.5K | - | - | X |
| 3673 | - | 100 | 50 | 12WF27 | - | - | - | - | - | - | 26.5K | 26.5K | 17 | 3/4X3 | |
| 3674 | - | 100 | 50 | 12WF27 | - | - | - | - | - | - | 26.5K | 26.5K | 17 | 3/4X3 | |
| 3675 | - | 100 | 36 | 16B31 | - | - | - | - | - | - | 39.8K | 294D | - | - | |
| 3676 | - | 100 | 36 | 16B31 | - | - | - | - | - | - | 294D | 294D | - | - | |
| 3677 | - | 100 | 36 | 16B31 | - | - | - | - | - | - | 294D | 463C | - | - | |
| 3678 | - | 100 | 36 | 16B31 | - | - | - | - | - | - | 463C | 294D | - | - | |
| 3679 | - | 100 | 36 | 16B31 | - | - | - | - | - | - | 294D | 294D | - | - | |
| 3680 | - | 100 | 36 | 16B31 | - | - | - | - | - | - | 294D | 39.8K | - | - | |
| 3681 | - | 100 | 36 | 8B13 | - | - | - | - | - | - | 17.4K | 17.4K | 12 | 3/4X3 | |
| 3682 | - | 100 | 36 | 16B31 | - | - | - | - | - | - | 26.5K | 26.5K | - | - | |
| 3683 | - | 100 | 50 | 16B26 | - | - | - | - | - | - | 26.5K | 26.5K | 40 | 3/4X3 | |
| 3684 | - | 100 | 50 | 12WF36 | - | - | - | - | - | - | 203B | 335C | 19 | 3/4X3 | |
| 3685 | - | 100 | 50 | 14B22 | - | - | - | - | - | - | 235C | 370J | 15 | 3/4X3 | |
| 3686 | - | 100 | 36 | 14B22 | - | - | - | - | - | - | 26.5K | 203B | 12 | 3/4X3 | |
| 3687 | - | 100 | 36 | 14B22 | - | - | - | - | - | - | 105L | 105L | 12 | 3/4X3 | |
| 3688 | - | 100 | 36 | 14B22 | - | - | - | - | - | - | 26.5K | 26.5K | - | - | |
| 3689 | - | 100 | 36 | 8B13 | - | - | - | - | - | - | 17.4K | 17.4K | 12 | 3/4X3 | |
| 3690 | - | 100 | 36 | 8B13 | - | - | - | - | - | - | 17.4K | 17.4K | 12 | 3/4X3 | |
| 3691 | - | 100 | 50 | 16WF50 | - | - | - | - | - | - | 26.5K | 208I | 39 | 3/4X3K | |
| 3692 | - | 100 | 50 | 16WF50 | - | - | - | - | - | - | 208I | 26.5K | 39 | 3/4X3K | |
| 3693 | - | 100 | 50 | 16WF50 | - | - | - | - | - | - | 26.5K | 208I | 39 | 3/4X3K | |
| 3694 | - | 100 | 50 | 16WF50 | - | - | - | - | - | - | 208I | 26.5K | 39 | 3/4X3K | |
| 3695 | - | 100 | 50 | 16WF36 | - | - | - | - | - | - | 208I | 26.5K | 15 | 3/4X3C | |
| 3696 | - | 100 | 50 | 16WF36 | - | - | - | - | - | - | 111M | 170B | 15 | 3/4X3C | |
| 3697 | - | 100 | 50 | 16WF36 | - | - | - | - | - | - | 111M | 170B | 15 | 3/4X3C | |
| 3698 | - | 100 | 50 | 16WF36 | - | - | - | - | - | - | 208I | 26.5K | 15 | 3/4X3C | |
| 3699 | - | 100 | 36 | 16WF40 | - | - | - | - | - | - | 220M | 205F | - | - | |

LICENSED PROFESSIONAL ENGINEER — LESLIE E. ROBERTSON — No. 34360 — UNIVERSITY OF THE STATE OF NEW YORK

**SKILLING-HELLE-CHRISTIANSEN-ROBERTSON** — **Civil & Structural Engineers**

PROJECT: THE WORLD TRADE CENTER | TITLE: BEAM SCHEDULE TOWERS A AND B | DATE: 9/27/68

REVISIONS

| BEAM NO. | SIZE | TYPE | FY | SHAPE | PLATE 1 WIDTH | PLATE 1 THICK | PLATE 2 WIDTH | PLATE 2 THICK | DIMENSIONS LENGTH | DIMENSIONS DIM. A | SUPPORTS LEFT | SUPPORTS RIGHT | STUDS NO. | STUDS SIZE | REMARKS |
|---|---|---|---|---|---|---|---|---|---|---|---|---|---|---|---|
| 3700 | - | 100 | 36 | 16WF40 | - | - | - | - | - | - | 401A | 401A | - | - | |
| 3701 | - | 100 | 36 | 16WF40 | - | - | - | - | - | - | 205F | 335C | - | - | 1 |
| 3702 | - | 100 | 36 | 16WF40 | - | - | - | - | - | - | 310B | 205F | 30 | 3/4X3 | 2 |
| 3703 | - | 100 | 36 | 16WF40 | - | - | - | - | - | - | 401A | 401A | - | - | |
| 3704 | - | 100 | 36 | 16WF40 | - | - | - | - | - | - | 205F | 220M | - | - | |
| 3705 | 16X5-1/2BX | 200 | 36 | - | 4 | 3/8 | 16 | 3/4 | - | - | 206A | 294D | - | - | X |
| 3706 | - | 100 | 50 | 14B22 | - | - | - | - | - | - | 26.5K | 26.5K | 34 | 3/4X3 | |
| 3707 | - | 100 | 36 | 12B19 | - | - | - | - | - | - | 26.5K | 105L | - | - | |
| 3708 | - | 100 | 50 | 14B22 | - | - | - | - | - | - | 26.5K | 26.5K | 34 | 3/4X3 | |
| 3709 | - | 100 | 50 | 14B22 | - | - | - | - | - | - | 26.5K | 26.5K | 34 | 3/4X3 | |
| 3710 | - | 100 | 50 | 12WF27 | - | - | - | - | - | - | 342A | 26.5K | 34 | 3/4X3 | |
| 3711 | - | 100 | 36 | 16WF40 | - | - | - | - | - | - | 399A | 26.5K | 16 | 3/4X3 | |
| 3712 | - | 100 | 36 | 16WF36 | - | - | - | - | - | - | 170B | 399A | 40 | 3/4X3 | |
| 3713 | - | 100 | 36 | 18WF45 | - | - | - | - | - | - | 368D | 203A | 8 | 3/4X3 | |
| 3714 | - | 100 | 36 | 12CH20.7 | - | - | - | - | - | - | 26.5K | 26.5K | - | - | |
| 3715 | - | 100 | 50 | 14B22 | - | - | - | - | - | - | 26.5K | 357K | 34 | 3/4X3 | |
| 3716 | - | 100 | 36 | 14B22 | - | - | - | - | - | - | 26.5K | 201S | 20 | 3/4X3 | |
| 3717 | - | 100 | 50 | 14B22 | - | - | - | - | - | - | 26.5K | 26.5K | 34 | 3/4X3 | |
| 3718 | - | 100 | 36 | 12B19 | - | - | - | - | - | - | 26.5K | 105L | - | - | |
| 3719 | - | 100 | 50 | 14B22 | - | - | - | - | - | - | 26.5K | 26.5K | 34 | 3/4X3 | |
| 3720 | - | 404 | 50 | 16WF50 | - | - | - | - | - | - | 26.5K | 274C | 26 | 3/4X3 | |
| 3721 | - | 404 | 50 | 16WF50 | - | - | - | - | - | - | 274C | 475A | 26 | 3/4X3 | |
| 3722 | - | 404 | 50 | 16WF50 | - | - | - | - | - | - | 26.5K | 274C | 26 | 3/4X3 | |
| 3723 | - | 404 | 50 | 16WF50 | - | - | - | - | - | - | 274C | 26.5K | 26 | 3/4X3 | |
| 3724 | 16X4 BX | 200 | | | 2- 1/2 | 3/8 | 16 | 3/4 | - | - | 274C | 296D | - | - | |
| 3725 | 16X4 BX | 200 | 36 | - | 2- 1/2 | 3/8 | 16 | 3/4 | - | - | 372A | 210A | - | - | |
| 3726 | - | 100 | 36 | 16B26 | - | - | - | - | - | - | 346A | 201S | 8 | 3/4X3 | |
| 3727 | | 100 | 36 | 12WF50 | - | - | - | - | - | - | 111M | 310B | 19 | 3/4X3 | |
| 3728 | - | 100 | 36 | 12B16.5 | - | - | - | - | - | - | 26.5K | 26.5K | 30 | 3/4X3 | |
| 3729 | - | 100 | 50 | 12WF27 | - | - | - | - | - | - | 201Q | 105L | 12 | 3/4X3 | |
| 3730 | - | 100 | 36 | 12B19 | - | - | - | - | - | - | 26.5K | 26.5K | - | - | |
| 3731 | - | 100 | 36 | 16B31 | - | - | - | - | - | - | 26.5K | 26.5K | - | - | |
| 3732 | | 100 | 36 | 16B31 | - | - | - | - | - | - | 111P | 111P | - | - | |
| 3733 | - | 100 | 36 | 14B22 | - | - | - | - | - | - | 370J | 342A | 19 | 3/4X3 | |

REMARKS

1 DETAIL 405 RIGHT END OF BEAM
2 DETAIL 405 LEFT END OF BEAM

LICENSED PROFESSIONAL ENGINEER — LESLIE E. ROBERTSON — No. 34360 — UNIVERSITY OF THE STATE OF NEW YORK

**SKILLING-HELLE-CHRISTIANSEN-ROBERTSON** — **Civil & Structural Engineers**

PROJECT: THE WORLD TRADE CENTER | TITLE: BEAM SCHEDULE TOWERS A AND B | DATE: 1/22/68

REVISIONS

| BEAM NO. | SIZE | TYPE | FY | PLATE 1 SHAPE | PLATE 1 WIDTH | PLATE 1 THICK | PLATE 2 WIDTH | PLATE 2 THICK | DIMENSIONS LENGTH | DIMENSIONS DIM. A | SUPPORTS LEFT | SUPPORTS RIGHT | STUDS NO. | STUDS SIZE | REMARKS |
|---|---|---|---|---|---|---|---|---|---|---|---|---|---|---|---|
| 3734 | - | 100 | 36 | 14B22 | - | - | - | - | - | - | 111P | 111P | 19 | 3/4X3 | |
| 3735 | - | 100 | 36 | 14B22 | - | - | - | - | - | - | 342A | 238A | 8 | 3/4X3 | |
| 3736 | - | 100 | 50 | 14B22 | - | - | - | - | - | - | 26.5K | 26.5K | 19 | 3/4X3 | |
| 3737 | - | 100 | 50 | 14B22 | - | - | - | - | - | - | 26.5K | 26.5K | 34 | 3/4X3 | |
| 3738 | - | 100 | 36 | 12WF27 | - | - | - | - | - | - | 201Q | 26.5K | 35 | 3/4X3 | |
| 3739 | - | 100 | 36 | 12B16.5 | - | - | - | - | - | - | 105L | 201Q | 26 | 3/4X3 | |
| 3740 | - | 100 | 36 | 12B16.5 | - | - | - | - | - | - | 26.5K | 26.5K | 26 | 3/4X3 | |
| 3742 | - | 100 | 36 | 16B31 | - | - | - | - | - | - | 26.5K | 26.5K | - | - | |
| 3743 | - | 100 | 36 | 16B31 | - | - | - | - | - | - | 26.5K | 26.5K | - | - | |
| 3744 | - | 100 | 36 | 16WF40 | - | - | - | - | - | - | 314C | 314C | 40 | 3/4X3 | |
| 3745 | - | 100 | 36 | 16WF40 | - | - | - | - | - | - | 106F | 111M | 8 | 3/4X3E | |
| 3746 | - | 100 | 36 | 16WF40 | - | - | - | - | - | - | 220I | 26.5K | - | - | |
| 3747 | - | 100 | 36 | 16WF40 | - | - | - | - | - | - | 238A | 106F | 8 | 3/4X3C | |
| 3748 | - | 100 | 36 | 16WF40 | - | - | - | - | - | - | 106F | 106E | 8 | 3/4X3C | |
| 3749 | - | 100 | 36 | 16WF40 | - | - | - | - | - | - | 106E | 106E | 40 | 3/4X3 | |
| 3750 | - | 100 | 36 | 24WF76 | - | - | - | - | - | - | 228B | 313H | 30 | 3/4X3 | |
| 3751 | - | 100 | 36 | 21WF55 | - | - | - | - | - | - | 313H | 263A | - | - | |
| 3752 | - | 100 | 36 | 21WF55 | - | - | - | - | - | - | 263A | 381C | - | - | |
| 3753 | 21X7 BU | 300 | 36 | - | 7 | 1- 1/2 | 18 | 1/2 | - | - | 381C | 324B | - | - | |
| 3754 | - | 100 | 36 | 24WF76 | - | - | - | - | - | - | 228B | 313H | - | - | |
| 3755 | - | 100 | 36 | 21WF55 | - | - | - | - | - | - | 313H | 263A | - | - | |
| 3756 | - | 100 | 36 | 21WF55 | - | - | - | - | - | - | 263A | 381C | - | - | |
| 3757 | 21X7 BU | 300 | 36 | - | 7 | 1- 1/2 | 18 | 1/2 | - | - | 381C | 324B | - | - | |
| 3758 | 18X4 CH | 500 | 50 | 18CH58.0 | 3 | 1/2 | - | - | FULL LENGTH | | 324B | 246D | - | - | |
| 3759 | - | 100 | 50 | 18CH42.7 | - | - | - | - | - | - | 410A | 411A | - | - | |
| 3760 | 18X4 CH | 505 | 50 | 18CH58.0 | 3 | 1/2 | - | - | 21FT 0 | 1FT 0 | 246B | 249C | - | - | |
| 3761 | 18X4 CH | 508 | 50 | 18CH58.0 | 3 | 1 | - | - | 24FT 0 | 1FT 0 | 249C | 246D | - | - | |
| 3762 | - | 100 | 36 | 18CH42.7 | - | - | - | - | - | - | 412A | 410A | - | - | |
| 3763 | 18X4 CH | 505 | 50 | 18CH58.0 | 3 | 1/2 | - | - | FULL LENGTH | | 246D | 324B | - | - | |
| 3764 | - | 100 | 36 | 8B13 | - | - | - | - | - | - | 481A | 105C | - | - | |
| 3765 | 12X4 CH | 505 | 50 | 12CH50.0 | 3 | 1/2 | - | - | 10FT 0 | 1FT 0 | 440B | 441A | - | - | |
| 3766 | 15X3-3/8CH | 505 | 50 | 15CH50.0 | 2-1/2 | 1-3/8 | - | - | 24FT 0 | 1FT 0 | 243C | 245G | - | - | 1 |

REMARKS

1 DETAIL 442A RIGHT END OF BEAM

LICENSED PROFESSIONAL ENGINEER LESLIE E. ROBERTSON No. 34360 UNIVERSITY OF THE STATE OF NEW YORK

5-SK1-113

**SKILLING, HELLE, CHRISTIANSEN, ROBERTSON** — Structural & Civil Engineers

PROJECT: THE WORLD TRADE CENTER | TITLE: BEAM SCHEDULE TOWERS A AND B | DATE: 12/ 6/68

REVISIONS

| BEAM NO. | SIZE | TYPE | FY | SHAPE | PLATE 1 WIDTH | PLATE 1 THICK | PLATE 2 WIDTH | PLATE 2 THICK | DIMENSIONS LENGTH | DIMENSIONS DIM. A | SUPPORTS LEFT | SUPPORTS RIGHT | STUDS NO. | STUDS SIZE | REMARKS |
|---|---|---|---|---|---|---|---|---|---|---|---|---|---|---|---|
| 3767 | 15X3-3/8CH | 505 | 50 | 15CH50.0 | 2-1/2 | 1-3/8 | - | - | 24FT 0 | 3FT 0 | 245G | 243C | - | - | 1 |
| 3768 | 12X4-CH | 505 | 50 | 12CH50.0 | 3 | 1-1/4 | - | - | 11FT 0 | 1FT 0 | 441A | 440A | - | - | |
| 3769 | 18X4 CH | 500 | 50 | 18CH58.0 | 3 | 1-1/4 | - | - | FULL LENGTH | | 243C | 228B | - | - | |
| 3770 | 18X4 CH | 507 | 50 | 18CH58.0 | 3 | 1-1/4 | - | - | FULL LENGTH | | 228B | 243C | - | - | |
| 3771 | - | 100 | 36 | 16B31 | - | - | - | - | - | - | 26.5K | 294D | - | - | |
| 3772 | - | 100 | 36 | 16B31 | - | - | - | - | - | - | 294D | 294D | - | - | X |
| 3773 | - | 100 | 36 | 16B31 | - | - | - | - | - | - | 294D | 463C | - | - | |
| 3774 | - | 100 | 36 | 16B31 | - | - | - | - | - | - | 463C | 294D | - | - | |
| 3775 | - | 100 | 36 | 16B31 | - | - | - | - | - | - | 294D | 294D | - | - | |
| 3776 | - | 100 | 36 | 16B31 | - | - | - | - | - | - | 294D | 26.5K | - | - | |
| 3777 | 16X5-1/28X | 200 | 36 | - | 4 | 3/8 | 16 | 3/4 | - | - | 206A | 294D | - | - | |
| 3778 | - | 100 | 50 | 14B22 | - | - | - | - | - | - | 235C | 370J | 34 | 3/4X3 | |
| 3779 | - | 100 | 50 | 12B16.5 | - | - | - | - | - | - | 26.5K | 26.5K | 18 | 3/4X3 | |
| 3780 | - | 100 | 50 | 12B16.5 | - | - | - | - | - | - | 26.5K | 26.5K | 18 | 3/4X3 | |
| 3781 | - | 100 | 36 | 12WF36 | - | - | - | - | - | - | 26.5K | 26.5K | - | - | |
| 3782 | - | 100 | 36 | 12WF36 | - | - | - | - | - | - | 26.5K | 26.5K | - | - | |
| 3783 | - | 100 | 50 | 12WF36 | - | - | - | - | - | - | 203B | 335C | 30 | 3/4X3 | |
| 3784 | - | 100 | 50 | 12WF36 | - | - | - | - | - | - | 105L | 310B | 30 | 3/4X3 | |
| 3785 | - | 100 | 50 | 12B16.5 | - | - | - | - | - | - | 26.5K | 26.5K | 12 | 3/4X3 | |
| 3786 | - | 100 | 50 | 12B16.5 | - | - | - | - | - | - | 26.5K | 26.5K | 26 | 3/4X3 | |
| 3787 | - | 100 | 36 | 8B13 | - | - | - | - | - | - | 17.4K | 17.4K | 12 | 3/4X3 | |
| 3788 | - | 100 | 36 | 14B26 | - | - | - | - | - | - | 203B | 106K | 8 | 3/4X3 | |
| 3789 | - | 100 | 36 | 8B13 | - | - | - | - | - | - | 17.4K | 17.4K | 12 | 3/4X3 | |
| 3790 | - | 100 | 36 | 8B13 | - | - | - | - | - | - | 17.4K | 17.4K | 12 | 3/4X3 | |
| 3791 | - | 100 | 36 | 8B13 | - | - | - | - | - | - | 17.4K | 17.4K | 12 | 3/4X3 | |
| 3792 | - | 100 | 36 | 8B13 | - | - | - | - | - | - | 17.4K | 17.4K | 16 | 5/8X2 | |
| 3793 | - | 100 | 50 | 14WF53 | - | - | - | - | - | - | 171A | 368B | 39 | 3/4X3D | |
| 3794 | - | 100 | 50 | 14WF53 | - | - | - | - | - | - | 368B | 26.5K | 39 | 3/4X3D | |
| 3795 | - | 100 | 36 | 8B13 | - | - | - | - | - | - | 481A | 105C | - | - | |
| 3796 | - | 100 | 36 | 14B22 | - | - | - | - | - | - | 26.5K | 203B | 8 | 3/4X3 | |
| 3797 | - | 100 | 50 | 14WF53 | - | - | - | - | - | - | 26.5K | 368B | 39 | 3/4X3D | |
| 3798 | - | 100 | 50 | 14WF53 | - | - | - | - | - | - | 368B | 26.5K | 39 | 3/4X3D | |
| 3799 | - | 100 | 50 | 12WF45 | - | - | - | - | - | - | 368B | 26.5K | 56 | 3/4X3 | |

REMARKS

1 DETAIL 442A LEFT END OF BEAM

LICENSED PROFESSIONAL ENGINEER — LESLIE E. ROBERTSON — No. 34360 — UNIVERSITY OF THE STATE OF NEW YORK

5-AB1-114

**SKILLING-HELLE-CHRISTIANSEN-ROBERTSON** — **Civil & Structural Engineers**

PROJECT: THE WORLD TRADE CENTER | TITLE: BEAM SCHEDULE TOWERS A AND B | DATE: 1/22/68

REVISIONS

| BEAM NO. | SIZE | TYPE | FY | PLATE 1 SHAPE | PLATE 1 WIDTH | PLATE 1 THICK | PLATE 2 WIDTH | PLATE 2 THICK | DIMENSIONS LENGTH | DIMENSIONS DIM. A | SUPPORTS LEFT | SUPPORTS RIGHT | STUDS NO. | STUDS SIZE | REMARKS |
|---|---|---|---|---|---|---|---|---|---|---|---|---|---|---|---|
| 3800 | - | 100 | 50 | 12WF45 | - | - | - | - | - | - | 111M | 170B | 12 | 3/4X3 | |
| 3801 | - | 100 | 50 | 12WF45 | - | - | - | - | - | - | 111M | 170B | 12 | 3/4X3 | |
| 3802 | - | 100 | 50 | 12WF45 | - | - | - | - | - | - | 368B | 26.5K | 56 | 3/4X3 | |
| 3803 | - | 100 | 50 | 14B22 | - | - | - | - | - | - | 26.5K | 26.5K | 19 | 3/4X3 | |
| 3804 | - | 100 | 36 | 12B19 | - | - | - | - | - | - | 26.5K | 105L | - | - | |
| 3805 | - | 100 | 50 | 14B22 | - | - | - | - | - | - | 26.5K | 26.5K | 19 | 3/4X3 | |
| 3806 | - | 100 | 50 | 14B22 | - | - | - | - | - | - | 26.5K | 26.5K | 19 | 3/4X3 | |
| 3807 | - | 100 | 36 | 18WF36 | - | - | - | - | - | - | 170B | 399A | 15 | 3/4X3 | |
| 3808 | - | 100 | 50 | 14B22 | - | - | - | - | - | - | 342A | 26.5K | 26 | 3/4X3 | |
| 3809 | - | 100 | 50 | 14B22 | - | - | - | - | - | - | 26.5K | 357G | 26 | 3/4X3 | |
| 3810 | - | 100 | 36 | 14B22 | - | - | - | - | - | - | 26.5K | 201S | 20 | 3/4X3 | |
| 3811 | - | 100 | 50 | 14B22 | - | - | - | - | - | - | 26.5K | 26.5K | 12 | 5/8X2 | |
| 3812 | - | 100 | 50 | 14B22 | - | - | - | - | - | - | 26.5K | 26.5K | 36 | 5/8X2 | |
| 3813 | - | 100 | 36 | 12B19 | - | - | - | - | - | - | 26.5K | 105L | - | - | |
| 3814 | - | 404 | 50 | 16WF45 | - | - | - | - | - | - | 26.5K | 274C | 26 | 3/4X3 | |
| 3815 | - | 404 | 50 | 16WF45 | - | - | - | - | - | - | 274C | 475A | 26 | 3/4X3 | |
| 3816 | - | 404 | 50 | 16WF45 | - | - | - | - | - | - | 26.5K | 274C | 26 | 3/4X3 | |
| 3817 | - | 404 | 50 | 16WF45 | - | - | - | - | - | - | 274C | 26.5K | 26 | 3/4X3 | |
| 3818 | - | 100 | 50 | 16WF36 | - | - | - | - | - | - | 399A | 26.5K | 14 | 3/4X3 | |
| 3819 | - | 100 | 36 | 12B16.5 | - | - | - | - | - | - | 26.5K | 346A | 8 | 3/4X3 | |
| 3820 | 16X4 BX | 200 | 36 | - | 2-1/2 | 3/8 | 16 | 3/4 | - | - | 274C | 296D | - | - | |
| 3821 | 16X4 BX | 200 | 36 | - | 2-1/2 | 3/8 | 16 | 3/4 | - | - | 372A | 210A | - | - | |
| 3822 | - | 100 | 50 | 14B22 | - | - | - | - | - | - | 239C | 370J | 34 | 3/4X3 | |
| 3823 | 16X4 BX | 200 | 36 | - | 2-1/2 | 3/8 | 16 | 3/4 | - | - | 274C | 296D | - | - | |
| 3824 | - | 100 | 50 | 12B16.5 | - | - | - | - | - | - | 26.5K | 26.5K | 18 | 3/4X3 | |
| 3825 | - | 100 | 50 | 12WF27 | - | - | - | - | - | - | 201Q | 105L | 26 | 3/4X3 | |
| 3826 | - | 100 | 36 | 12B19 | - | - | - | - | - | - | 26.5K | 26.5K | - | - | |
| 3827 | - | 100 | 36 | 16B31 | - | - | - | - | - | - | 111P | 111P | - | - | |
| 3828 | - | 100 | 50 | 14B22 | - | - | - | - | - | - | 370J | 342A | 12 | 3/4X3 | |
| 3829 | - | 100 | 50 | 14B22 | - | - | - | - | - | - | 111P | 111P | 12 | 3/4X3 | |
| 3830 | - | 100 | 50 | 14B22 | - | - | - | - | - | - | 26.5K | 26.5K | - | - | |
| 3831 | - | 100 | 50 | 12WF27 | - | - | - | - | - | - | 201Q | 26.5K | 12 | 3/4X3 | |
| 3832 | - | 100 | 36 | 12B16.5 | - | - | - | - | - | - | 26.5K | 26.5K | 18 | 3/4X3 | |
| 3833 | - | 100 | 36 | 12B16.5 | - | - | - | - | - | - | 105L | 201Q | 22 | 3/4X4-1/2 | |

X

LICENSED PROFESSIONAL ENGINEER — LESLIE E. ROBERTSON — No. 34360 — UNIVERSITY OF THE STATE OF N.Y.

5-AB1-115

**SKILLING, HELLE, CHRISTIANSEN, ROBERTSON** — Structural & Civil Engineers

PROJECT: THE WORLD TRADE CENTER | TITLE: BEAM SCHEDULE TOWERS A AND B | DATE: 12/ 6/68

REVISIONS

| BEAM NO. | SIZE | TYPE | FY | SHAPE | PLATE 1 WIDTH | PLATE 1 THICK | PLATE 2 WIDTH | PLATE 2 THICK | DIMENSIONS LENGTH | DIMENSIONS DIM. A | SUPPORTS LEFT | SUPPORTS RIGHT | STUDS NO. | STUDS SIZE | REMARKS |
|---|---|---|---|---|---|---|---|---|---|---|---|---|---|---|---|
| 3834 | - | 10C | 36 | 12B16.5 | - | - | - | - | - | - | 26.5K | 26.5K | 18 | 3/4X3 | |
| 3835 | - | 10C | 36 | 16WF40 | - | - | - | - | - | - | 314C | 314C | 39 | 3/4X3 | |
| 3836 | - | 10C | 36 | 16WF40 | - | - | - | - | - | - | 106F | 111M | 8 | 3/4X3 | |
| 3837 | - | 10C | 36 | 16WF40 | - | - | - | - | - | - | 220I | 26.5K | 6 | 3/4X3 | |
| 3838 | - | 10C | 36 | 14B22 | - | - | - | - | - | - | 342A | 238A | 8 | 3/4X3 | |
| 3839 | - | 10C | 36 | 16WF40 | - | - | - | - | - | - | 238A | 106F | 8 | 3/4X3 | X |
| 3840 | - | 10C | 36 | 16WF40 | - | - | - | - | - | - | 106F | 106E | 39 | 3/4X3 | |
| 3841 | - | 10C | 36 | 16WF40 | - | - | - | - | - | - | 106E | 106E | 39 | 3/4X3 | |
| 3842 | - | 10C | 50 | 12CH50.0 | - | - | - | - | - | - | 227A | 311B | - | - | |
| 3843 | - | 10C | 36 | 15CH33.9 | - | - | - | - | - | - | 426A | 421A | - | - | |
| 3844 | - | 10C | 50 | 12CH45.0 | - | - | - | - | - | - | 426A | 427A | - | - | |
| 3845 | 21X7 DL | 20C | 36 | - | 7 | 1 | 19 | 5/8 | - | - | 317C | 324B | - | - | |
| 3846 | - | 10C | 36 | 24WF76 | - | - | - | - | - | - | 259 | 324 | - | - | |
| 3847 | - | 10C | 36 | 15CH33.9 | - | - | - | - | - | - | 290A | 277A | - | - | |
| 3848 | - | 10C | 36 | 12WF99 | - | - | - | - | - | - | 381B | 435B | - | - | |
| 3849 | 21X7 BU | 30C | 36 | - | 7 | 1 | 19 | 5/8 | - | - | 317D | 324B | - | - | |
| 3850 | 18X4 CH | 509 | 50 | 18CH45.8 | - | - | - | - | - | - | 324B | 246B | - | - | |
| 3851 | - | 10C | 36 | 18CH42.7 | - | - | - | - | - | - | 410A | 411A | - | - | |
| 3852 | 18X4 CH | 10C | 50 | 18CH42.7 | - | - | - | - | - | - | 246B | 249B | - | - | |
| 3853 | 18X4 CH | 50E | 50 | 18CH42.7 | 2-7/8 | 7/8 | - | - | 24FT 0 | 1FT 0 | 249B | 246B | - | - | |
| 3854 | - | 10C | 36 | 18CH42.7 | - | - | - | - | - | - | 412A | 410A | - | - | |
| 3855 | - | 10D | 50 | 18CH45.8 | - | - | - | - | - | - | 246B | 324B | - | - | |
| 3856 | 18X4 CH | 507 | 50 | 18CH51.9 | - | - | - | - | - | - | 227A | 243A | - | - | |
| 3857 | 12X4 CH | 505 | 50 | 12CH50.0 | 2-7/8 | 3/4 | - | - | 12FT 3 | 1FT 0 | 440A | 441B | - | - | |
| 3858 | 15X3-3/8CH | 515 | 50 | 15CH40.0 | 2-1/2 | 1/2 | - | - | 26FT 1 | 1FT 0 | 243A | 245E | - | - | 1 |
| 3859 | 15X3-3/8CH | 505 | 50 | 15CH40.0 | 2-1/2 | 1/2 | - | - | 26FT 0 | 1FT 0 | 245E | 243A | - | - | 2 |
| 3860 | 12X4 CH | 505 | 50 | 12CH50.0 | 2-7/8 | 3/4 | - | - | 12FT 4 | 1FT 0 | 441A | 440A | - | - | |
| 3861 | 18X4 CH | 500 | 50 | 18CH51.9 | - | - | - | - | - | - | 243A | 228A | - | - | |
| 3862 | - | 10C | 36 | 16B31 | - | - | - | - | - | - | 26.5K | 299 | 26 | 3/4X3 | |
| 3863 | - | 10C | 36 | 16B26 | - | - | - | - | - | - | 346A | 201S | 12 | 3/4X3 | |
| 3864 | - | 10C | 50 | 14B22 | - | - | - | - | - | - | 370J | 342A | 12 | 3/4X3 | |
| 3865 | - | 10C | 36 | 15CH33.9 | - | - | - | - | - | - | 290A | 277A | - | - | |
| 3866 | - | 10C | 36 | 14B22 | - | - | - | - | - | - | 395A | 306B | - | - | |

REMARKS

1 DETAIL 442A RIGHT END OF BEAM
2 DETAIL 442A LEFT END OF BEAM

LICENSED PROFESSIONAL ENGINEER ★ LESLIE E. ROBERTSON ★ No. 54360 ★ UNIVERSITY OF THE STATE OF NEW YORK

S-A3.1-116

**SKILLING-HELLE-CHRISTIANSEN-ROBERTSON** — **Civil & Structural Engineers**

PROJECT: THE WORLD TRADE CENTER | TITLE: BEAM SCHEDULE TOWERS A AND B | DATE: 1/22/68

REVISIONS

| BEAM NO. | SIZE | TYPE | FY | SHAPE | PLATE 1 WIDTH | PLATE 1 THICK | PLATE 2 WIDTH | PLATE 2 THICK | DIMENSIONS LENGTH | DIMENSIONS DIM. A | SUPPORTS LEFT | SUPPORTS RIGHT | STUDS NO. | STUDS SIZE | REMARKS |
|---|---|---|---|---|---|---|---|---|---|---|---|---|---|---|---|
| 3867 | - | 404 | 36 | 16WF50 | - | - | - | - | - | - | 26.5K | 208H | 26 | 3/4X3 | |
| 3868 | - | 404 | 36 | 18WF45 | - | - | - | - | - | - | 274D | 475A | 26 | 3/4X3 | |
| 3869 | - | 100 | 50 | 14B22 | - | - | - | - | - | - | 26.5K | 26.5K | - | - | |
| 3870 | - | 100 | 36 | 14B22 | - | - | - | - | - | - | 26.5K | 26.5K | - | - | |
| 3871 | - | 100 | 50 | 14B22 | - | - | - | - | - | - | 26.5K | 26.5 | - | - | |
| 3872 | - | 100 | 50 | 12B19 | - | - | - | - | - | - | 26.5K | 26.5K | 30 | 3/4X3 | X |
| 3873 | - | 100 | 50 | 14B22 | - | - | - | - | - | - | 310B | 26.5K | 15 | 3/4X3 | C |
| 3874 | - | 100 | 50 | 16B36 | - | - | - | - | - | - | 178B | 287G | 15 | 3/4X3 | B |
| 3875 | - | 100 | 50 | 14B22 | - | - | - | - | - | - | 307C | 368B | 34 | 3/4X3 | |
| 3876 | - | 100 | 36 | 12B16.5 | - | - | - | - | - | - | 26.5K | 26.5K | - | - | |
| 3877 | - | 100 | 36 | 16WF40 | - | - | - | - | - | - | 368B | 287G | 39 | 3/4X3 | D |
| 3878 | - | 100 | 50 | 14B22 | - | - | - | - | - | - | 26.5K | 26.5K | - | - | |
| 3879 | - | 100 | 36 | 16B26 | - | - | - | - | - | - | 308A | 26.5K | 15 | 3/4X3 | C |
| 3880 | - | 100 | 50 | 14B22 | - | - | - | - | - | - | 26.5K | 26.5K | - | - | |
| 3881 | - | 100 | 50 | 16WF40 | - | - | - | - | - | - | 220I | 208H | 39 | 3/4X3 | D |
| 3882 | - | 100 | 50 | 16WF40 | - | - | - | - | - | - | 208H | 287G | 39 | 3/4X3 | D |
| 3883 | - | 100 | 36 | 16WF36 | - | - | - | - | - | - | 368B | 208H | 8 | 3/4X3 | |
| 3884 | - | 100 | 50 | 16WF40 | - | - | - | - | - | - | 208H | 208H | 39 | 3/4X3 | D |
| 3885 | - | 100 | 50 | 16WF40 | - | - | - | - | - | - | 208H | 220I | 39 | 3/4X3 | J |
| 3886 | - | 100 | 50 | 16WF36 | - | - | - | - | - | - | 26.5K | 208H | 39 | 3/4X3 | |
| 3887 | - | 100 | 50 | 16WF36 | - | - | - | - | - | - | 26.5K | 208H | 47 | 3/4X3 | |
| 3888 | - | 100 | 50 | 16WF36 | - | - | - | - | - | - | 26.5K | 208H | 47 | 3/4X3 | |
| 3889 | - | 100 | 50 | 14B22 | - | - | - | - | - | - | 26.5K | 26.5K | - | - | |
| 3890 | - | 100 | 50 | 14B22 | - | - | - | - | - | - | 26.5K | 26.5K | - | - | |
| 3891 | - | 100 | 50 | 14B22 | - | - | - | - | - | - | 26.5K | 26.5K | - | - | |
| 3892 | - | 100 | 50 | 14B22 | - | - | - | - | - | - | 26.5K | 26.5K | - | - | |
| 3893 | - | 100 | 50 | 14B22 | - | - | - | - | - | - | 26.5K | 26.5K | - | - | |
| 3894 | - | 402 | 36 | 16WF40 | 4 | 3/8 | - | - | 18FT 0 | - | 316A | 251D | - | - | |
| 3895 | - | 402 | 36 | 16WF40 | 4 | 3/8 | - | - | 13FT 0 | - | 402A | 402A | - | - | |
| 3896 | - | 402 | 36 | 16WF40 | 4 | 3/8 | - | - | 18FT 0 | - | 310B | 335C | - | - | 1 |
| 3897 | - | 402 | 36 | 16WF40 | 4 | 3/8 | - | - | 18FT 0 | - | 307C | 308A | - | - | 2 |
| 3898 | - | 402 | 36 | 16WF40 | 4 | 3/8 | - | - | 13FT 0 | - | 402A | 402A | - | - | |
| 3899 | - | 402 | 36 | 16WF40 | 4 | 3/8 | - | - | 18FT 0 | - | 251D | 316A | - | - | |

REMARKS

1 DETAIL 405 RIGHT END OF BEAM
2 DETAIL 405 LEFT END OF BEAM

LICENSED PROFESSIONAL ENGINEER LESLIE E. ROBERTSON No. 34360 STATE OF NEW YORK

**SKILLING-HELLE-CHRISTIANSEN-ROBERTSON** — **Civil & Structural Engineers**

PROJECT: THE WORLD TRADE CENTER | TITLE: BEAM SCHEDULE TOWERS A AND B | DATE: 10/ 7/68

REVISIONS

| BEAM NO. | SIZE | TYPE | FY | SHAPE | PLATE 1 WIDTH | PLATE 1 THICK | PLATE 2 WIDTH | PLATE 2 THICK | DIMENSIONS LENGTH | DIMENSIONS DIM. A | SUPPORTS LEFT | SUPPORTS RIGHT | STUDS NO. | STUDS SIZE | REMARKS |
|---|---|---|---|---|---|---|---|---|---|---|---|---|---|---|---|
| 3900 | - | 402 | 36 | 16B31 | 4 | 3/8 | - | - | 18FT 0 | - | 220D | 267B | - | - | |
| 3901 | - | 402 | 36 | 16B31 | 4 | 3/8 | - | - | 18FT 0 | - | 267B | 267B | - | - | |
| 3902 | - | 402 | 36 | 16B31 | 4 | 3/8 | - | - | 18FT 0 | - | 267B | 335I | - | - | 1 |
| 3903 | - | 402 | 36 | 16B31 | 4 | 3/8 | - | - | 18FT 0 | - | 307D | 267B | - | - | 2 |
| 3904 | - | 402 | 36 | 16B31 | 4 | 3/8 | - | - | 18FT 0 | - | 267B | 267B | - | - | |
| 3905 | - | 402 | 36 | 16B31 | 4 | 3/8 | - | - | 18FT 0 | - | 267B | 220D | - | - | X |
| 3906 | - | 100 | 50 | 16B31 | - | - | - | - | - | - | 267B | 283S | 15 | 3/4X3 | |
| 3907 | - | 100 | 50 | 16B31 | - | - | - | - | - | - | 267B | 111P | 15 | 3/4X3 | |
| 3908 | - | 100 | 50 | 16B31 | - | - | - | - | - | - | 267B | 283S | 15 | 3/4X3 | |
| 3909 | - | 100 | 50 | 16B31 | - | - | - | - | - | - | 267B | 283S | 15 | 3/4X3 | |
| 3910 | - | 700 | 36 | 16WF36 | 9 | 1/2 | - | - | SEE SUPT. DET. | | 719 | 705 | 48 | 3/4X3 | (4) |
| 3911 | 16X6 BU | 300 | 36 | - | 6 | 1 | 14 | 1/2 | - | - | 720 | 719 | 48 | 3/4X3 | (5) |
| 3912 | - | 700 | 36 | 16WF36 | 9 | 1/2 | - | - | SEE SUPT. DET. | | 704 | 705 | 40 | 3/4X3 | |
| 3913 | - | 700 | 36 | 16WF45 | 9 | 1/2 | - | - | SEE SUPT. DET. | | 704 | 713 | 58 | 3/4X3 | |
| * 3914 | - | 100 | 36 | 16WF40 | - | - | - | - | - | - | 220 | 26.5K | - | - | |
| 3915 | - | 100 | 36 | 30WF108 | - | - | - | - | - | - | 44.2K | 44.2K | - | - | (6) |
| 3916 | - | 100 | 36 | 30WF108 | - | - | - | - | - | - | 44.2K | 44.2K | - | - | (7) |
| 3917 | - | 100 | 36 | 30WF108 | - | - | - | - | - | - | 325A | 283L | - | - | |
| 3918 | - | 100 | 36 | 30WF108 | - | - | - | - | - | - | 326A | 283L | - | - | |
| 3919 | - | 100 | 36 | 30WF108 | - | - | - | - | - | - | 325A | 312A | - | - | |
| 3920 | - | 700 | 36 | 16WF36 | 9 | 1/2 | - | - | SEE SUPT. DET. | | 705 | 702 | 48 | 3/4X3 | |
| 3921 | - | 100 | 36 | 30WF108 | - | - | - | - | - | - | 712 | 707 | - | - | 3 |
| 3922 | - | 100 | 36 | 30WF108 | - | - | - | - | - | - | 714 | 706 | - | - | |
| 3923 | - | 700 | 36 | 16WF36 | 9 | 1/2 | - | - | SEE SUPT. DET. | | 705 | 705 | - | - | |
| 3924 | - | 100 | 36 | 16WF36 | - | - | - | - | - | - | 701 | 705 | 48 | 3/4X3 | |
| 3925 | - | 700 | 36 | 16WF36 | 9 | 1/2 | - | - | SEE SUPT. DET. | | 705 | 707 | 48 | 3/4X3 | |
| 3926 | - | 100 | 36 | 16WF36 | - | - | - | - | - | - | 707 | 706 | 48 | 3/4X3 | |
| 3927 | - | 700 | 36 | 16WF36 | 9 | 1/2 | - | - | SEE SUPT. DET. | | 705A | 705 | 48 | 3/4X3 | |
| 3928 | - | 100 | 36 | 30WF108 | - | - | - | - | - | - | 283L | 326A | - | - | |
| 3929 | - | 700 | 36 | 16WF36 | 9 | 1/2 | - | - | SEE SUPT. DET. | | 714 | 715 | 24 | 3/4X3 | |
| 3930 | - | 100 | 50 | 30WF108 | - | - | - | - | - | - | 283L | 325A | - | - | |
| 3931 | - | 700 | 50 | 16WF45 | 9 | 1/2 | - | - | SEE SUPT. DET. | | 710 | 739 | 58 | 3/4X3 | |
| 3932 | - | 100 | 50 | 30WF108 | - | - | - | - | - | - | 312A | 325A | - | - | |
| 3933 | - | 700 | 50 | 16WF36 | 9 | 1/2 | - | - | SEE SUPT. DET. | | 722 | 739 | 48 | 3/4X3 | |

REMARKS:

1 DETAIL 406 [illegible] END OF BEAM
2 DETAIL 406 [illegible] END OF BEAM
3 DET. 712 ,REV. AFTER FABRICATION,TOWER A ONLY
4 TOWER A ELEV. 264. DETAIL 719A FOR LEFT SUPPORT.
5 TOWER A ELEV. 264. DETAIL 719A FOR RIGHT SUPPORT.
6 TOWER A & B ELEV. 264. DETAIL 19-AB-912 FOR BOTH SUPPORTS.
7 TOWER A & B ELEV. 264. DETAIL 19-AB-912 FOR BOTH SUPPORTS.
* HOLD

LICENSED PROFESSIONAL ENGINEER * LESLIE E. ROBERTSON * No. 34360 * UNIVERSITY OF THE STATE OF NEW YORK

5-AB1-118

**SKILLING, HELLE, CHRISTIANSEN, ROBERTSON** — Structural & Civil Engineers

PROJECT: THE WORLD TRADE CENTER | TITLE: BEAM SCHEDULE TOWERS A AND B | DATE: 1/10/69

REVISIONS

| BEAM NO. | SIZE | TYPE | FY | SHAPE | PLATE 1 WIDTH | PLATE 1 THICK | PLATE 2 WIDTH | PLATE 2 THICK | DIMENSIONS LENGTH | DIMENSIONS DIM. A | SUPPORTS LEFT | SUPPORTS RIGHT | STUDS NO. | STUDS SIZE | REMARKS |
|---|---|---|---|---|---|---|---|---|---|---|---|---|---|---|---|
| 3934 | - | 700 | 50 | 16WF36 | 9 | 1/2 | - | - | SEE SUPT. DET. | | 727 | 714 | 48 | 3/4X3 | |
| 3935 | - | 100 | 36 | 8B13 | - | - | - | - | - | - | 17.4K | 436A | - | - | |
| 3936 | - | 700 | 50 | 16WF36 | 9 | 1/2 | - | - | SEE SUPT. DET. | | 726 | 715 | 48 | 3/4X3 | |
| 3937 | - | 700 | 50 | 16WF36 | 9 | 1/2 | - | - | SEE SUPT. DET. | | 723 | 739 | 48 | 3/4X3 | |
| 3938 | - | 100 | 50 | 12CH45.0 | - | - | - | - | - | - | 426A | 427B | - | - | |
| 3939 | - | 700 | 50 | 16WF36 | 9 | 1/2 | - | - | SEE SUPT. DET. | | 710 | 739 | 48 | 3/4X3 | |
| 3940 | - | 469 | 50 | 30WF108 | - | - | - | - | - | - | 283P | 323A | - | - | 2 |
| 3941 | - | 700 | 36 | 16WF36 | 9 | 1/2 | - | - | SEE SUPT. DET. | | 710 | 710 | 26 | 3/4X3 | |
| 3942 | - | 700 | 36 | 12WF27 | 8-1/2 | 1/2 | - | - | SEE SUPT. DET. | | 721 | 722 | 36 | 3/4X3 | |
| 3943 | - | 700 | 36 | 16B26 | 7-1/2 | 1/2 | - | - | SEE SUPT. DET. | | 739 | 727 | 30 | 3/4X3 | |
| 3944 | - | 700 | 36 | 12WF27 | 8-1/2 | 1/2 | - | - | SEE SUPT. DET. | | 725 | 726 | 36 | 3/4X3 | |
| 3945 | - | 700 | 36 | 12WF27 | 8-1/2 | 1/2 | - | - | SEE SUPT. DET. | | 724 | 723 | 36 | 3/4X3 | |
| 3946 | - | 700 | 36 | 16WF36 | 9 | 1/2 | - | - | SEE SUPT. DET. | | 709 | 710 | 25 | 3/4X3 | |
| 3947 | - | 700 | 36 | 12WF27 | 8-1/2 | 1/2 | - | - | SEE SUPT. DET. | | 722 | 727 | 36 | 3/4X3 | |
| 3948 | - | 700 | 36 | 16WF36 | 9 | 1/2 | - | - | SEE SUPT. DET. | | 727 | 726 | 25 | 3/4X3 | |
| 3949 | - | 700 | 36 | 12WF27 | 8-1/2 | 1/2 | - | - | SEE SUPT. DET. | | 726 | 723 | 36 | 3/4X3 | |
| 3950 | - | 700 | 50 | 16WF40 | 9 | 1/2 | - | - | SEE SUPT. DET. | | 721 | 725 | 52 | 3/4X3 | |
| 3951 | - | 700 | 36 | 16WF36 | 9 | 1/2 | - | - | SEE SUPT. DET. | | 725 | 724 | 24 | 3/4X3 | |
| 3952 | - | 425 | 36 | 16WF40 | - | - | - | - | - | 4FT 0 | 708 | 704 | 15 | 3/4X3 | |
| 3953 | - | 700 | 36 | 16WF45 | 9 | 1/2 | - | - | SEE SUPT. DET. | | 704 | 712 | 52 | 3/4X3 | |
| 3954 | - | 700 | 36 | 18WF45 | 9-1/2 | 1/2 | - | - | SEE SUPT. DET. | | 712 | 714 | 58 | 3/4X3 | |
| 3955 | - | 700 | 36 | 16WF40 | 9 | 1/2 | - | - | SEE SUPT. DET. | | 715 | 711A | 52 | 3/4X3 | |
| 3956 | - | 700 | 36 | 16WF40 | 9 | 1/2 | - | - | SEE SUPT. DET. | | 711A | 711A | 52 | 3/4X3 | |
| 3957 | - | 700 | 36 | 16WF40 | 9 | 1/2 | - | - | SEE SUPT. DET. | | 711A | 709 | 52 | 3/4X3 | |
| 3958 | - | 700 | 50 | 18WF45 | 9-1/2 | 1/2 | - | - | SEE SUPT. DET. | | 709 | 710 | 58 | 3/4X3 | |
| 3959 | - | 700 | 50 | 18WF45 | 9-1/2 | 1/2 | - | - | SEE SUPT. DET. | | 710 | 722 | 58 | 3/4X3 | |
| 3960 | - | 700 | 50 | 18WF45 | 9-1/2 | 1/2 | - | - | SEE SUPT. DET. | | 723 | 710 | 58 | 3/4X3 | |
| 3961 | - | 700 | 50 | 18WF45 | 9-1/2 | 1/2 | - | - | SEE SUPT. DET. | | 710 | 709 | 58 | 3/4X3 | |
| 3962 | - | 100 | 36 | 10WF21 | - | - | - | - | - | - | 369A | 1728 | - | - | |
| 3963 | - | 700 | 50 | 16WF45 | 9 | 1/2 | - | - | SEE SUPT. DET. | | 739 | 710 | 58 | 3/4X3 | |
| 3964 | - | 100 | 36 | 16B26 | - | - | - | - | - | - | 508 | 418B | - | - | 1 |
| 3965 | - | 700 | 36 | 16WF36 | 9 | 1/2 | - | - | SEE SUPT. DET. | | 739 | 721 | 48 | 3/4X3 | |
| 3966 | - | 100 | 50 | 16B26 | - | - | - | - | - | - | 26.5K | 26.5K | - | - | |

REMARKS

1 DETAIL 512 INTERMEDIATE SUPPORT OF BEAM
2 BEAM TYPE 469, REVISION AFTER FABRICATION, TOWER A ONLY

LICENSED PROFESSIONAL ENGINEER — LESLIE E. ROBERTSON — No. 34360 — STATE OF NEW YORK

5-AB1-119

**SKILLING, HELLE, CHRISTIANSEN, ROBERTSON** — Structural & Civil Engineers

PROJECT: THE WORLD TRADE CENTER | TITLE: BEAM SCHEDULE TOWERS A AND B | DATE: 1/10/69

REVISIONS

| BEAM NO. | SIZE | TYPE | FY | SHAPE | PLATE 1 WIDTH | PLATE 1 THICK | PLATE 2 WIDTH | PLATE 2 THICK | DIMENSIONS LENGTH | DIMENSIONS DIM. A | SUPPORTS LEFT | SUPPORTS RIGHT | STUDS NO. | STUDS SIZE | REMARKS |
|---|---|---|---|---|---|---|---|---|---|---|---|---|---|---|---|
| 3967 | - | 700 | 36 | 16WF36 | 9 | 1/2 | - | - | SEE SUPT. DET. | | 717 | 725 | 48 | 3/4X3 | |
| 3968 | - | 700 | 36 | 16WF45 | 9 | 1/2 | - | - | SEE SUPT. DET. | | 739 | 724 | 58 | 3/4X3 | |
| 3969 | - | 100 | (36) | 16B26 | - | - | - | - | - | - | 509A | 509A | - | - | |
| 3970 | - | 700 | 50 | 16WF45 | 9 | 1/2 | - | - | SEE SUPT. DET. | | 739 | 709 | 48 | 3/4X3 | |
| 3971 | - | 100 | 36 | 21WF55 | - | - | - | - | - | - | 437A | 414B | - | - | |
| 3972 | - | 700 | 36 | 16WF36 | 9 | 1/2 | - | - | SEE SUPT. DET. | | 715 | 705A | 40 | 3/4X3 | X |
| 3973 | - | 700 | 50 | 18WF45 | 9-1/2 | 1/2 | - | - | SEE SUPT. DET. | | 710 | 721 | 58 | 3/4X3 | |
| 3974 | - | 700 | 50 | 16WF45 | 9 | 1/2 | - | - | SEE SUPT. DET. | | 739 | 739 | 58 | 3/4X3 | |
| 3975 | - | 700 | 50 | 18WF45 | 9-1/2 | 1/2 | - | - | SEE SUPT. DET. | | 709 | 709 | 58 | 3/4X3 | |
| 3976 | - | 100 | 36 | 16B26 | - | - | - | - | - | - | 26.5K | 418B | - | - | 1 |
| 3977 | - | 100 | 36 | 30WF108 | - | - | - | - | - | - | 44.2K | 44.2K | - | - | 4 |
| 3978 | - | 100 | 36 | 16B26 | - | - | - | - | - | - | 418B | 508 | - | - | 1 |
| 3979 | - | 700 | 36 | 16WF36 | 9 | 1/2 | - | - | SEE SUPT. DET. | | 705 | 704 | 40 | 3/4X3 | |
| 3980 | - | 100 | 36 | 12WF31 | - | - | - | - | - | - | 201Q | 105L | 12 | 3/4X3 | |
| 3981 | - | 100 | 36 | 30WF108 | - | - | - | - | - | - | 706 | 716 | - | - | |
| 3982 | - | 700 | 36 | 16WF36 | 9 | 1/2 | - | - | SEE SUPT. DET. | | 720 | 717 | 40 | 3/4X3 | |
| 3983 | 18X4 BU | 300 | 36 | - | 4 | 1- 3/8 | 15-1/4 | 1/2 | - | - | 35.3K | 35.3K | 58 | 3/4X3 | |
| 3984 | - | 100 | 36 | 24WF68 | - | - | - | - | - | - | 719 | 718 | - | - | 5 |
| 3985 | - | 100 | 36 | 30WF108 | - | - | - | - | - | - | 707 | 713 | - | - | 6 |
| 3986 | - | 100 | 36 | 10WF21 | - | - | - | - | - | - | 17.4K | 17.4K | - | - | |
| 3987 | - | 100 | 36 | 16B26 | - | - | - | - | - | - | 508 | 418B | - | - | 1 |
| 3988 | - | 100 | 36 | 18WF50 | - | - | - | - | - | - | 487A | 30.0K | - | - | 7 |
| 3989 | - | 100 | 36 | 12WF27 | - | - | - | - | - | - | 26.5K | 26.5K | 36 | 3/4X3 | |
| 3990 | - | 700 | 36 | 14WF30 | 8-3/4 | 1/2 | - | - | SEE SUPT. DET. | | 739 | 739 | 40 | 3/4X3 | 2,3 |
| 3991 | - | 700 | 36 | 18WF45 | 9-1/2 | 1/2 | - | - | SEE SUPT. DET. | | 713 | 716 | 58 | 3/4X3 | |
| 3992 | - | 700 | 36 | 18WF50 | 9-1/2 | 1/2 | - | - | SEE SUPT. DET. | | 717 | 718 | 58 | 3/4X3 | |
| 3993 | - | 700 | 36 | 16WF40 | 9 | 1/2 | - | - | SEE SUPT. DET. | | 718 | 711 | 52 | 3/4X3 | |
| 3994 | - | 700 | 36 | 16WF40 | 9 | 1/2 | - | - | SEE SUPT. DET. | | 711 | 709 | 52 | 3/4X3 | |
| 3995 | - | 700 | 36 | 16WF36 | 9 | 1/2 | - | - | SEE SUPT. DET. | | 706 | 720 | 25 | 3/4X3 | |
| 3996 | - | 700 | 36 | 16WF36 | 9 | 1/2 | - | - | SEE SUPT. DET. | | 716 | 717 | 24 | 3/4X3 | |
| 3997 | - | 700 | 36 | 16WF36 | 9 | 1/2 | - | - | SEE SUPT. DET. | | 706 | 705A | 25 | 3/4X3 | |
| 3998 | - | 700 | 36 | 12WF27 | 8-1/2 | 1/2 | - | - | SEE SUPT. DET. | | 739 | 739 | 36 | 3/4X3 | |
| 3999 | - | 100 | 36 | 12WF27 | - | - | - | - | - | - | 26.5K | 26.5K | 36 | 3/4X3 | |

REMARKS

1. DETAIL 512 INTERMEDIATE SUPPORT OF BEAM
2. USE TYPE 100 AND DELETE PLATE 1, TOWER B ONLY
3. REVISED AFTER FABRICATION, SEE 19-A-900 FOR END SUPPORTS, TOWER A ONLY
4. TOWER A & B ELEV. 264. DETAIL 19-AB-912 FOR BOTH SUPPORTS.
5. TOWER A ELEV. 264. DETAIL 719A FOR LEFT SUPPORT.
6. TOWER A & B ELEV. 264. DETAIL 713A FOR RIGHT SUPPORT.
7. TOWER A & B ELEV. 264. DETAIL 19-AB-912 FOR RIGHT SUPPORT.

LICENSED PROFESSIONAL ENGINEER — LESLIE E. ROBERTSON — No. 34360 — STATE OF NEW YORK

5-AB1-120

**SKILLING-HELLE-CHRISTIANSEN-ROBERTSON** — **Civil & Structural Engineers**

PROJECT: THE WORLD TRADE CENTER | TITLE: BEAM SCHEDULE TOWERS A AND B | DATE: 1/22/68

REVISIONS

| BEAM NO. | SIZE | TYPE | FY | SHAPE | PLATE 1 WIDTH | PLATE 1 THICK | PLATE 2 WIDTH | PLATE 2 THICK | DIMENSIONS LENGTH | DIM. A | SUPPORTS LEFT | SUPPORTS RIGHT | STUDS NO. | STUDS SIZE | REMARKS |
|---|---|---|---|---|---|---|---|---|---|---|---|---|---|---|---|
| 4000 | - | 100 | 36 | 15CH33.9 | - | - | - | - | - | - | 290A | 290A | - | - | |
| 4001 | - | 700 | 50 | 18WF45 | 9-1/2 | 1/2 | - | - | SEE SUPT. DET. | | 701 | 703 | 58 | 3/4X3 | |
| 4002 | - | 700 | 50 | 18WF45 | 9-1/2 | 1/2 | - | - | SEE SUPT. DET. | | 703 | 703 | 58 | 3/4X3 | |
| 4003 | - | 700 | 50 | 18WF45 | 9-1/2 | 1/2 | - | - | SEE SUPT. DET. | | 703 | 703A | 58 | 3/4X3 | |
| 4004 | - | 700 | 50 | 18WF45 | 9-1/2 | 1/2 | - | - | SEE SUPT. DET. | | 703A | 703 | 58 | 3/4X3 | |
| 4005 | - | 700 | 50 | 18WF45 | 9-1/2 | 1/2 | - | - | SEE SUPT. DET. | | 703 | 703 | 58 | 3/4X3 | X |
| 4006 | - | 700 | 50 | 18WF45 | 9-1/2 | 1/2 | - | - | SEE SUPT. DET. | | 703 | 702 | 58 | 3/4X3 | |
| 4007 | - | 700 | 36 | 18WF45 | 9-1/2 | 1/2 | - | - | SEE SUPT. DET. | | 703A | 703A | 30 | 3/4X3 | |
| 4008 | - | 100 | 50 | 12WF27 | - | - | - | - | - | - | 357B | 201Q | 12 | 3/4X3 | |
| 4009 | - | 100 | 36 | 16WF40 | - | - | - | - | - | - | 106E | 106E | 39 | 3/4X3 | |
| 4010 | - | 700 | 36 | 16WF36 | 9 | 1/2 | - | - | SEE SUPT. DET. | | 711A | 705 | 40 | 3/4X3 | |
| 4011 | - | 700 | 36 | 16WF36 | 9 | 1/2 | - | - | SEE SUPT. DET. | | 705 | 711 | 40 | 3/4X3 | |
| 4012 | - | 100 | 36 | 14WF38 | - | - | - | - | - | - | 106 | 106 | - | - | |
| 4013 | - | 100 | 36 | 16WF45 | - | - | - | - | - | - | 701 | 708 | - | - | |
| 4014 | - | 700 | 50 | 18WF85 | 9-1/2 | 1/2 | - | - | SEE SUPT. DET. | | 708 | 709 | 64 | 3/4X3 | |
| 4015 | - | 700 | 36 | 18WF45 | 9-1/2 | 1/2 | - | - | SEE SUPT. DET. | | 709 | 709 | 30 | 3/4X3 | |
| 4016 | - | 700 | 50 | 18WF85 | 9-1/2 | 1/2 | - | - | SEE SUPT. DET. | | 709 | 708 | 64 | 3/4X3 | |
| 4017 | - | 100 | 36 | 16WF45 | - | - | - | - | - | - | 708 | 701 | - | - | |
| 4018 | - | 700 | 36 | 16WF45 | 9 | 1/2 | - | - | SEE SUPT. DET. | | 702 | 709 | 45 | 3/4X3 | |
| 4019 | - | 700 | 50 | 18WF45 | 9-1/2 | 1/2 | - | - | SEE SUPT. DET. | | 709 | 709 | 58 | 3/4X3 | |
| 4020 | - | 700 | 36 | 18WF45 | 9-1/2 | 1/2 | - | - | SEE SUPT. DET. | | 709 | 709 | 30 | 3/4X3 | |
| 4021 | - | 700 | 50 | 18WF45 | 9-1/2 | 1/2 | - | - | SEE SUPT. DET. | | 709 | 709 | 58 | 3/4X3 | |
| 4022 | - | 700 | 36 | 16WF45 | 9 | 1/2 | - | - | SEE SUPT. DET. | | 709 | 702 | 45 | 3/4X3 | |
| 4023 | - | 100 | 36 | 14WF30 | - | - | - | - | - | - | 26.5K | 330B | - | - | |
| 4024 | - | 100 | 36 | 14WF30 | - | - | - | - | - | - | 26.5K | 26.5K | - | - | |
| 4025 | - | 100 | 50 | 16WF45 | - | - | - | - | - | - | 106D | 106D | 47 | 3/4X3 | |
| 4026 | - | 100 | 36 | 8B13 | - | - | - | - | - | - | 17.4K | 17.4K | 12 | 3/4X3 | |
| 4027 | - | 100 | 36 | 16WF40 | - | - | - | - | - | - | 220M | 205F | - | - | |
| 4028 | - | 100 | 36 | 16WF40 | - | - | - | - | - | - | 401A | 401A | - | - | |
| 4029 | - | 100 | 36 | 16WF40 | - | - | - | - | - | - | 205F | 335C | - | - | 1 |
| 4030 | - | 100 | 36 | 16WF40 | - | - | - | - | - | - | 310B | 205F | - | - | 2 |
| 4031 | - | 100 | 36 | 16WF40 | - | - | - | - | - | - | 401A | 401A | - | - | |
| 4032 | - | 100 | 36 | 16WF40 | - | - | - | - | - | - | 205F | 220M | - | - | |
| 4033 | - | 100 | 36 | 16B31 | - | - | - | - | - | - | 26.5K | 26.5K | - | - | |

REMARKS

1 DETAIL 405 RIGHT END OF BEAM
2 DETAIL 405 LEFT END OF BEAM

LICENSED PROFESSIONAL ENGINEER — LESLIE E. ROBERTSON — No. 34360 — STATE OF NEW YORK

S-ar 1-121

**SKILLING-HELLE-CHRISTIANSEN-ROBERTSON** — **Civil & Structural Engineers**

PROJECT: THE WORLD TRADE CENTER | TITLE: BEAM SCHEDULE TOWERS A AND B | DATE: 1/22/68

REVISIONS

| BEAM NO. | SIZE | TYPE | FY | SHAPE | PLATE 1 WIDTH | PLATE 1 THICK | PLATE 2 WIDTH | PLATE 2 THICK | DIMENSIONS LENGTH | DIMENSIONS DIM. A | SUPPORTS LEFT | SUPPORTS RIGHT | STUDS NU. | STUDS SIZE | REMARKS |
|---|---|---|---|---|---|---|---|---|---|---|---|---|---|---|---|
| 4034 | - | 100 | 36 | 16B31 | - | - | - | - | - | - | 26.5K | 26.5K | - | - | |
| 4035 | - | 100 | 36 | 16B31 | - | - | - | - | - | - | 26.5K | 26.5K | - | - | |
| 4036 | 16X8BX | 252 | 36 | | 8 | 1/2 | 15 | 1/2 | - | - | 383A | 812B | - | - | |
| 4037 | - | 100 | 36 | 16WF36 | - | - | - | - | - | - | 26.5K | 26.5K | (20) | 3/4X3 | |
| 4038 | - | 100 | 50 | 15CH40.0 | - | - | - | - | - | - | 376A | 375A | - | - | |
| 4039 | - | 100 | 50 | 15CH40.0 | - | - | - | - | - | - | 375A | 376A | - | - | |
| 4040 | - | 100 | 50 | 18WF45 | - | - | - | - | - | - | 803E | 804B | (10) | 3/4X3 | |
| 4041 | - | 100 | 50 | 18WF45 | - | - | - | - | - | - | 803E | 801B | (10) | 3/4X3 | |
| 4042 | - | 100 | 36 | 21WF55 | - | - | - | - | - | - | 293A | 381B | - | - | |
| 4043 | - | 100 | 50 | 18WF45 | - | - | - | - | - | - | 801B | 803E | (10) | 3/4X3 | |
| 4044 | - | 100 | 50 | 18WF45 | - | - | - | - | - | - | 804B | 803E | (10) | 3/4X3 | |
| 4045 | - | 100 | 36 | 14B22 | - | - | - | - | - | - | 216A | 335C | 24 | 3/4X3 | |
| 4046 | - | 100 | 36 | 16WF40 | - | - | - | - | - | - | 2201 | 374A | 39 | 3/4X3 | |
| 4047 | - | 100 | 36 | 16WF40 | - | - | - | - | - | - | 374A | 287G | (39) | 3/4X3 | |
| 4048 | - | 100 | 36 | 16WF40 | - | - | - | - | - | - | 106D | 111I | (39) | 3/4X3 | |
| 4049 | - | 100 | 36 | 16WF40 | - | - | - | - | - | - | 106D | 111I | (39) | 3/4X3 | |
| 4050 | - | 100 | 36 | 8CH11.5 | - | - | - | - | - | - | 392B | 17.4K | - | - | |
| 4051 | - | 100 | 36 | 8CH11.5 | - | - | - | - | - | - | 17.4K | 392B | - | - | |
| 4052 | - | 100 | 36 | 12WF27 | - | - | - | - | - | - | 283G | 105D | 19 | 3/4X | 4-1/2 |
| 4053 | - | 404 | 36 | 18WF50 | - | - | - | - | - | - | 338D | 274B | (26) | 3/4X3 | |
| 4054 | - | 404 | 36 | 18WF45 | - | - | - | - | - | - | 274B | 282A | (26) | 3/4X3 | |
| 4055 | 18X4 BX | 200 | 36 | - | 2-1/2 | 3/8 | 18 | 3/4 | - | - | 296C | 274B | - | - | |
| 4056 | - | 100 | 50 | 14WF45 | - | - | - | - | - | - | 106D | 111I | 39 | 3/4X3 | |
| 4057 | - | 100 | 36 | 18WF40 | - | - | - | - | - | - | 205F | 220M | 24 | 3/4X3 | |
| 4058 | - | 100 | 36 | 14WF45 | - | - | - | - | - | - | 286A | 395C | - | - | |
| 4059 | - | 100 | 50 | 12CH50.0 | - | - | - | - | - | - | 229B | 311A | - | - | |
| 4060 | 18X4 CH | 503 | 50 | 18CH51.9 | - | - | - | - | - | - | 229B | 245B | - | - | 1 |
| 4061 | 18X4-CH | 500 | 50 | 18CH51.9 | - | - | - | - | - | - | 245B | 229B | - | - | 1 |
| 4062 | - | 100 | 36 | 9CH9.0 | - | - | - | - | - | - | 501A | 366C | - | - | |
| 4063 | - | 404 | 36 | 16WF45 | - | - | - | - | - | - | 278A | 282A | (26) | 3/4X3 | |
| 4064 | - | 100 | 50 | 15CH40.0 | - | - | - | - | - | - | 315A | 232A | - | - | |
| 4065 | - | 404 | 36 | 16WF45 | - | - | - | - | - | - | 26.5K | 282A | (26) | 3/4X3 | |
| 4066 | - | 100 | 50 | 15CH40.0 | - | - | - | - | - | - | 315A | 232B | - | - | |

REMARKS

1 REINF. PLATES 3FT 9 X 1

LICENSED PROFESSIONAL ENGINEER LESLIE E. ROBERTSON No. 34960 STATE OF NEW YORK

S-2-3-122

**SKILLING-HELLE-CHRISTIANSEN-ROBERTSON** — Civil & Structural Engineers

PROJECT: THE WORLD TRADE CENTER | TITLE: BEAM SCHEDULE TOWERS A AND B | DATE: 07/11/69

REVISIONS

| BEAM NO. | SIZE | TYPE | FY | PLATE 1 SHAPE | PLATE 1 WIDTH | PLATE 1 THICK | PLATE 2 WIDTH | PLATE 2 THICK | DIMENSIONS LENGTH | DIMENSIONS DIM. A | SUPPORTS LEFT | SUPPORTS RIGHT | STUDS NO. | STUDS SIZE | REMARKS |
|---|---|---|---|---|---|---|---|---|---|---|---|---|---|---|---|
| 4067 | 38X7 BU | 301 | 36 | - | 7 | 1- 3/4 | 34-1/2 | 3/4 | - | - | 2201 | 352B | - | - | 1 |
| 4068 | - | 100 | 36 | 16WF40 | - | - | - | - | - | - | 352B | 287G | 44 | 3/4X3 | |
| 4069 | - | 100 | 36 | 10WF21 | - | - | - | - | - | - | 101 | 17.4K | - | - | |
| 4070 | - | 100 | 36 | 10WF21 | - | - | - | - | - | - | 269 | 101 | - | - | |
| 4071 | - | 100 | 36 | 10WF21 | - | - | - | - | - | - | 17.4K | 511 | - | - | |
| 4072 | - | 100 | 36 | 10WF21 | - | - | - | - | - | - | 17.4K | 17.4K | - | - | |
| 4073 | - | 100 | 36 | 24WF76 | - | - | - | - | - | - | 228A | 313C | - | - | |
| 4074 | - | 100 | 36 | 10WF45 | - | - | - | - | - | - | 105K | 105K | - | - | |
| 4075 | - | 100 | 36 | 12WF27 | - | - | - | - | - | - | 26.5K | 26.5K | - | - | |
| 4076 | - | 100 | 36 | 12B19 | - | - | - | - | - | - | 17.4K | 17.4K | - | - | |
| 4077 | - | 100 | 36 | 12B19 | - | - | - | - | - | - | 17.4K | 17.4K | 14 | 3/4X3 | |
| 4078 | - | 100 | 36 | 12WF27 | - | - | - | - | - | - | 26.5K | 26.5K | - | - | |
| 4079 | - | 100 | 36 | 12B19 | - | - | - | - | - | - | 17.4K | 481A | - | - | |
| 4080 | - | 100 | 36 | 8B13 | - | - | - | - | - | - | 17.4K | 17.4K | - | - | |
| 4081 | - | 100 | 36 | 12B19 | - | - | - | - | - | - | 26.5K | 26.5K | 19 | 3/4X3 | |
| 4082 | 16X4 BX | 200 | 36 | - | 2-1/2 | 3/8 | 16 | 3/4 | - | - | 296C | 296C | - | - | |
| 4083 | - | 100 | 36 | 16WF36 | - | - | - | - | - | - | 26.5K | 26.5K | - | - | |
| 4084 | - | 100 | 36 | 8B13 | - | - | - | - | - | - | 17.4K | 17.4K | - | - | |
| 4085 | - | 100 | 36 | 14B22 | - | - | - | - | - | - | 26.5K | 26.5K | - | - | |
| 4086 | - | 100 | 36 | 14B22 | - | - | - | - | - | - | 26.5K | 26.5K | - | - | |
| 4087 | - | 100 | 36 | 16WF36 | - | - | - | - | - | - | 26.5K | 26.5K | - | - | |
| 4088 | - | 100 | 36 | 12WF27 | - | - | - | - | - | - | 26.5K | 26.5K | - | - | |
| 4089 | - | 100 | 36 | 12WF27 | - | - | - | - | - | - | 26.5K | 26.5K | - | - | |
| 4090 | - | 100 | 36 | 8B13 | - | - | - | - | - | - | 17.4K | 17.4K | - | - | |
| 4091 | - | 100 | 36 | 8B13 | - | - | - | - | - | - | 102 | 507 | - | - | |
| 4092 | - | 100 | 36 | 14B22 | - | - | - | - | - | - | 26.5K | 26.5K | - | - | |
| 4093 | - | 100 | 36 | 16B31 | - | - | - | - | - | - | 26.5K | 105 | - | - | |
| 4094 | - | 100 | 36 | 16B26 | - | - | - | - | - | - | 26.5K | 26.5K | - | - | |
| 4095 | - | 100 | 36 | 12B19 | - | - | - | - | - | - | 336 | 503 | - | - | |
| 4096 | - | 100 | 36 | 12B19 | - | - | - | - | - | - | 17.4K | 176 | - | - | |
| 4097 | - | 100 | 36 | 12B19 | - | - | - | - | - | - | 17.4K | 505 | - | - | |
| 4098 | - | 100 | 36 | 12B16.5 | - | - | - | - | - | - | 507 | 505 | - | - | |
| 4099 | - | 100 | 36 | 12B16.5 | - | - | - | - | - | - | 505 | 17.4K | - | - | |

REMARKS

1 REINF. PLATES 8FT 5 X 3/4

LICENSED PROFESSIONAL ENGINEER — LESLIE E. ROBERTSON — No. 34360 — UNIVERSITY OF THE STATE OF NEW YORK

5-AB1-123

**SKILLING-HELLE-CHRISTIANSEN-ROBERTSON** — **Civil & Structural Engineers**

PROJECT: THE WORLD TRADE CENTER | TITLE: BEAM SCHEDULE TOWERS A AND B | DATE: 1/22/68

REVISIONS

| BEAM NO. | SIZE | TYPE | FY | SHAPE | PLATE 1 WIDTH | PLATE 1 THICK | PLATE 2 WIDTH | PLATE 2 THICK | DIMENSIONS LENGTH | DIMENSIONS DIM. A | SUPPORTS LEFT | SUPPORTS RIGHT | STUDS NO. | STUDS SIZE | REMARKS |
|---|---|---|---|---|---|---|---|---|---|---|---|---|---|---|---|
| 4100 | - | 100 | 36 | 14WF30 | - | - | - | - | - | - | 209A | 209A | - | - | |
| 4101 | - | 100 | 36 | 16B26 | - | - | - | - | - | - | 418B | 509A | - | - | 1 |
| 4102 | - | 100 | 36 | 16B26 | - | - | - | - | - | - | 509A | 26.5K | - | - | |
| 4103 | - | 100 | 36 | 12B16.5 | - | - | - | - | - | - | 105L | 26.5K | 15 | 3/4X4-1/2C | |
| 4104 | - | 100 | 36 | 8B13 | - | - | - | - | - | - | 17.4K | 481A | 12 | 3/4X3 | |
| 4105 | - | 100 | 36 | 16B31 | - | - | - | - | - | - | 475A | 26.5K | - | - | |
| 4106 | - | 100 | 36 | 16B31 | - | - | - | - | - | - | 26.5K | 26.5K | - | - | |
| 4107 | - | 100 | 50 | 12WF27 | - | - | - | - | - | - | 2010 | 105L | 12 | 3/4X4-1/2 | |
| 4108 | - | 100 | 36 | 12WF27 | - | - | - | - | - | - | 26.5K | 26.5K | 18 | 3/4X3 | |
| 4109 | 16X5-1/2BX | 201 | 36 | - | 4 | 3/8 | 16 | 3/4 | - | - | 296A | 247G | - | - | |
| 4110 | - | 100 | 36 | 14B22 | - | - | - | - | - | - | 26.5K | 26.5K | - | - | |
| 4111 | 16X5-1/2BX | 201 | 36 | - | 4 | 1/4 | 16 | 3-4 | - | - | 247G | 206A | - | - | |
| 4112 | 16X5-1/2BX | 202 | 36 | - | 4 | 1/4 | 16 | 3-4 | - | - | 247G | 247G | - | - | |
| 4113 | 16X5-1/2BX | 202 | 36 | - | 4 | 1/4 | 16 | 3-4 | - | - | 225A | 328A | - | - | |
| 4114 | - | 100 | 36 | 16B31 | - | - | - | - | - | - | 396A | 396A | - | - | |
| 4115 | - | 100 | 36 | 16B26 | - | - | - | - | - | - | 203B | 106K | 8 | 3/4X3 | |
| 4116 | - | 100 | 50 | 12B16.5 | - | - | - | - | - | - | 26.5K | 26.5K | 26 | 3/4X3 | |
| 4117 | - | 100 | 50 | 12B16.5 | - | - | - | - | - | - | 26.5K | 26.5K | 26 | 3/4X3 | |
| 4118 | - | 100 | 50 | 12B16.5 | - | - | - | - | - | - | 26.5K | 26.5K | 26 | 3/4X3 | |
| 4119 | - | 100 | 50 | 12B16.5 | - | - | - | - | - | - | 26.5K | 26.5K | 26 | 3/4X3 | |
| 4120 | - | 100 | 36 | 16WF36 | - | - | - | - | - | - | 26.5K | 208H | 16 | 3/4X3B | |
| 4121 | - | 100 | 50 | 12B16.5 | - | - | - | - | - | - | 466A | 466A | 26 | 3/4X3 | |
| 4122 | - | 100 | 36 | 12WF27 | - | - | - | - | - | - | 26.5K | 26.5K | - | - | |
| 4123 | - | 100 | 50 | 12B16.5 | - | - | - | - | - | - | 466A | 466A | 26 | 3/4X3 | |
| 4124 | - | 100 | 36 | 12B16.5 | - | - | - | - | - | - | 26.5K | 26.5K | - | - | |
| 4125 | - | 100 | 50 | 12B16.5 | - | - | - | - | - | - | 466A | 466A | 26 | 3/4X3 | |
| 4126 | - | 100 | 36 | 8B13 | - | - | - | - | - | - | 17.4K | 17.4K | - | - | |
| 4127 | - | 100 | 50 | 14B22 | - | - | - | - | - | - | 235C | 370J | 34 | 3/4X3 | |
| 4128 | - | 100 | 50 | 14B22 | - | - | - | - | - | - | 235C | 370J | 34 | 3/4X3 | |
| 4129 | - | 100 | 36 | 16WF40 | - | - | - | - | - | - | 106 | 106 | - | - | |
| 4130 | - | 100 | 50 | 12B16.5 | - | - | - | - | - | - | 466A | 466A | 26 | 3/4X3 | |
| 4131 | - | 100 | 36 | 16B31 | - | - | - | - | - | - | 396A | 220G | - | - | |
| 4132 | - | 100 | 50 | 12B16.5 | - | - | - | - | - | - | 466A | 466A | 26 | 3/4X3 | |
| 4133 | - | 100 | 50 | 12B16.5 | - | - | - | - | - | - | 466A | 466A | 26 | 3/4X3 | |

REMARKS

1 DETAIL 512 INTERMEDIATE SUPPORT OF BEAM

LICENSED PROFESSIONAL ENGINEER LESLIE E. ROBERTSON No. 34380 UNIVERSITY OF THE STATE OF NEW YORK

5-AR1-124

**SKILLING-HELLE-CHRISTIANSEN-ROBERTSON** — **Civil & Structural Engineers**

PROJECT: THE WORLD TRADE CENTER | TITLE: BEAM SCHEDULE TOWERS A AND B | DATE: 2/12/68

REVISIONS

| BEAM NO. | SIZE | TYPE | FY | SHAPE | PLATE 1 WIDTH | PLATE 1 THICK | PLATE 2 WIDTH | PLATE 2 THICK | DIMENSIONS LENGTH | DIMENSIONS DIM. A | SUPPORTS LEFT | SUPPORTS RIGHT | STUDS NO. | STUDS SIZE | REMARKS |
|---|---|---|---|---|---|---|---|---|---|---|---|---|---|---|---|
| 4134 | - | 100 | 36 | 16B31 | - | - | - | - | - | - | 26.5K | 486A | - | - | |
| 4135 | - | 100 | 36 | 16B31 | - | - | - | - | - | - | 486A | 486A | - | - | |
| 4136 | - | 100 | 36 | 16B31 | - | - | - | - | - | - | 486A | 463C | - | - | |
| 4137 | - | 100 | 36 | 16B31 | - | - | - | - | - | - | 463C | 486A | - | - | |
| 4138 | - | 100 | 36 | 16B31 | - | - | - | - | - | - | 486A | 486A | - | - | |
| 4139 | - | 100 | 36 | 16B31 | - | - | - | - | - | - | 486A | 26.5K | - | - | |
| 4140 | - | 100 | 36 | 16WF40 | - | - | - | - | - | - | 220M | 203F | - | - | |
| 4141 | - | 100 | 36 | 16WF40 | - | - | - | - | - | - | 401A | 401A | - | - | |
| 4142 | - | 100 | 36 | 16WF40 | - | - | - | - | - | - | 205F | 335C | - | - | 1 |
| 4143 | - | 100 | 36 | 16WF40 | - | - | - | - | - | - | 310B | 205F | - | - | 2 |
| 4144 | - | 100 | 36 | 16WF40 | - | - | - | - | - | - | 401A | 401A | - | - | |
| 4145 | - | 100 | 36 | 16WF40 | - | - | - | - | - | - | 205F | 220M | - | - | |
| 4146 | - | 100 | 50 | 16B26 | - | - | - | - | - | - | 111Q | 111U | 40 | 3/4X3 | |
| 4147 | - | 100 | 50 | 16B26 | - | - | - | - | - | - | 111Q | 111U | 40 | 3/4X3 | |
| 4148 | - | 100 | 50 | 16B26 | - | - | - | - | - | - | 111Q | 111U | 40 | 3/4X3 | |
| 4149 | - | 100 | 50 | 16B26 | - | - | - | - | - | - | 111Q | 111U | 40 | 3/4X3 | |
| 4150 | - | 100 | 50 | 16WF36 | - | - | - | - | - | - | 171A | 208I | 39 | 3/4X3D | |
| 4151 | - | 100 | 50 | 16WF36 | - | - | - | - | - | - | 208I | 26.5K | 39 | 3/4X3D | |
| 4152 | - | 100 | 50 | 16WF36 | - | - | - | - | - | - | 26.5K | 26.5K | 8 | 3/4X3 | |
| 4153 | - | 100 | 50 | 16WF36 | - | - | - | - | - | - | 26.5K | 26.5K | 6 | 3/4X3 | |
| 4154 | - | 100 | 50 | 16WF36 | - | - | - | - | - | - | 26.5K | 208I | 39 | 3/4X3D | |
| 4155 | - | 100 | 50 | 16WF36 | - | - | - | - | - | - | 208I | 171A | 39 | 3/4X3K | |
| 4156 | - | 464 | 50 | 16WF36 | - | - | - | - | - | - | 208I | 26.5K | 56 | 3/4X3 | |
| 4157 | - | 100 | 50 | 16WF36 | - | - | - | - | - | - | 111M | 26.5K | 56 | 3/4X3 | |
| 4158 | - | 100 | 50 | 16B26 | - | - | - | - | - | - | 203B | 335C | 40 | 3/4X3 | |
| 4159 | - | 100 | 50 | 16B26 | - | - | - | - | - | - | 105L | 310B | 40 | 3/4X3 | |
| 4160 | - | 404 | 50 | 14WF45 | - | - | - | - | - | - | 278A | 475A | 26 | 3/4X3 | |
| 4161 | - | 100 | 50 | 16WF36 | - | - | - | - | - | - | 208I | 26.5K | 56 | 3/4X3 | |
| 4162 | - | 100 | 50 | 16WF50 | - | - | - | - | - | - | 469B | 344A | 30 | 3/4X3 | |
| 4163 | - | 100 | 50 | 16WF50 | - | - | - | - | - | - | 344A | 26.5K | 30 | 3/4X3 | |
| 4164 | - | 100 | 36 | 16WF36 | - | - | - | - | - | - | 111M | 26.5K | 34 | 3/4X3 | |
| 4165 | - | 100 | 36 | 16WF36 | - | - | - | - | - | - | 26.5K | 26.5K | - | - | |
| 4166 | - | 100 | 50 | 16WF50 | - | - | - | - | - | - | 26.5K | 344A | 30 | 3/4X3 | |

REMARKS

1 DETAIL 405 RIGHT END OF BEAM
2 DETAIL 405 LEFT END OF BEAM

LICENSED PROFESSIONAL ENGINEER LESLIE E. ROBERTSON NO. 34360 IN THE STATE OF NEW YORK



5-AB1-125

**SKILLING-HELLE-CHRISTIANSEN-ROBERTSON** — **Civil & Structural Engineers**

PROJECT: THE WORLD TRADE CENTER | TITLE: BEAM SCHEDULE TOWERS A AND 8 | DATE: 1/22/68

REVISIONS

| BEAM NO. | SIZE | TYPE | FY | PLATE 1 SHAPE | PLATE 1 WIDTH | PLATE 1 THICK | PLATE 2 WIDTH | PLATE 2 THICK | DIMENSIONS LENGTH | DIMENSIONS DIM. A | SUPPORTS LEFT | SUPPORTS RIGHT | STUDS NO. | STUDS SIZE | REMARKS |
|---|---|---|---|---|---|---|---|---|---|---|---|---|---|---|---|
| 4167 | - | 100 | 50 | 16WF50 | - | - | - | - | - | - | 344A | 469B | 30 | 3/4X3 | (H) |
| 4168 | - | 100 | 50 | 21WF55 | - | - | - | - | - | - | 469A | 470A | 56 | 3/4X3 | |
| 4169 | - | 446 | 50 | 24WF84 | - | - | - | - | - | - | 262A | 344A | - | - | |
| 4170 | - | 100 | 50 | 21WF62 | - | - | - | - | - | - | 470A | 35.3K | 56 | 3/4X3 | |
| 4171 | - | 446 | 50 | 24WF68 | - | - | - | - | - | - | 105N | 487A | - | - | |
| 4172 | - | 100 | 50 | 16WF45 | - | - | - | - | - | - | 203C | 357E | 15 | 3/4X3 | X |
| 4173 | - | 100 | 50 | 16WF45 | - | - | - | - | - | - | 105N | 105P | 15 | 3/4X3 | |
| 4174 | - | 446 | 50 | 24WF68 | - | - | - | - | - | - | 105N | 487A | - | - | |
| 4175 | - | 100 | 50 | 21WF62 | - | - | - | - | - | - | 35.3K | 470A | 56 | 3/4X3 | |
| 4176 | - | 446 | 50 | 24WF84 | - | - | - | - | - | - | 344A | 262A | - | - | |
| 4177 | - | 100 | 50 | 21WF55 | - | - | - | - | - | - | 470A | 469A | 56 | 3/4X3 | |
| 4178 | 20X9 BX | 250 | 36 | - | 9 | 7/8 | 18-1/4 | 3/8 | - | - | 277A | 302A | - | - | |
| 4179 | - | 100 | 36 | 16WF40 | - | - | - | - | - | - | 106F | 111M | - | - | |
| 4180 | 20X9 BX | 250 | 36 | - | 9 | 7/8 | 18-1/4 | 3/8 | - | - | 277A | 302A | - | - | |
| 4181 | 30X7 BU | 320 | 36 | - | 7 | 1- 3/4 | 26-1/2 | 1/2 | - | - | 201L | 283Q | - | - | |
| 4182 | 30X7 BU | 320 | 36 | - | 7 | 1- 3/4 | 26-1/2 | 1/2 | - | - | 201L | 283Q | - | - | |
| 4183 | - | 100 | 36 | 16WF36 | - | - | - | - | - | - | 203C | 106E | (8) | 3/4X3 | |
| 4184 | - | 100 | 36 | 30WF116 | - | - | - | - | - | - | 44.2K | 44.2K | - | - | |
| 4185 | 30X10BU | 300 | 36 | - | 10 | 2- 1/2 | 25 | 7/8 | - | - | 201M | 111T | - | - | |
| 4186 | - | 100 | 36 | 30WF116 | - | - | - | - | - | - | 44.2K | 44.2K | - | - | |
| 4187 | 30X10BU | 300 | 36 | - | 10 | 2- 1/2 | 25 | 7/8 | - | - | 201M | 111T | - | - | |
| 4188 | - | 100 | 36 | 30WF116 | - | - | - | - | - | - | 44.2K | 44.2K | - | - | |
| 4189 | 30X7 BU | 300 | 36 | - | 7 | 1- 3/4 | 26-1/2 | 1/2 | - | - | 201M | 283Q | 15 | 3/4X3 | |
| 4190 | 30X7 BU | 300 | 36 | - | 7 | 1- 3/4 | 26-1/2 | 1/2 | - | - | 201L | 283Q | 15 | 3/4X3 | |
| 4191 | - | 100 | 36 | 30WF116 | - | - | - | - | - | - | 44.2K | 44.2K | - | - | |
| 4192 | 30X10BU | 300 | 36 | - | 10 | 2- 1/2 | 25 | 7/8 | - | - | 201M | 111T | - | - | |
| 4193 | - | 100 | 36 | 30WF116 | - | - | - | - | - | - | 44.2K | 44.2K | - | - | |
| 4194 | 30X10BU | 300 | 36 | - | 10 | 2- 1/2 | 25 | 7/8 | - | - | 201M | 111T | - | - | |
| 4195 | - | 100 | 36 | 30WF116 | - | - | - | - | - | - | 44.2K | 44.2K | - | - | |
| 4196 | 30X7 BU | 300 | 36 | - | 7 | 2 | 26 | 5/8 | - | - | 44.2K | 44.2K | - | - | |
| 4197 | 30X7 BU | 300 | 36 | - | 7 | 2 | 26 | 5/8 | - | - | 44.2K | 44.2K | - | - | |
| 4198 | 30X7 BU | 300 | 36 | - | 7 | 2 | 26 | 5/8 | - | - | 44.2K | 44.2K | - | - | |
| 4199 | 30X7 BU | 300 | 36 | - | 7 | 2 | 26 | 5/8 | - | - | 44.2K | 44.2K | - | - | |

LICENSED PROFESSIONAL ENGINEER LESLIE E. ROBERTSON NO. 34360 UNIVERSITY OF THE STATE OF NEW YORK

**SKILLING-HELLE-CHRISTIANSEN-ROBERTSON** — **Civil & Structural Engineers**

PROJECT: THE WORLD TRADE CENTER | TITLE: BEAM SCHEDULE TOWERS A AND B | DATE: 1/22/68

REVISIONS

| BEAM NO. | SIZE | TYPE | FY | SHAPE | PLATE 1 WIDTH | PLATE 1 THICK | PLATE 2 WIDTH | PLATE 2 THICK | DIMENSIONS LENGTH | DIMENSIONS DIM. A | SUPPORTS LEFT | SUPPORTS RIGHT | STUDS NO. | STUDS SIZE | REMARKS |
|---|---|---|---|---|---|---|---|---|---|---|---|---|---|---|---|
| 4200 | 30X7 BU | 300 | 36 | - | 7 | 2 | 26 | 5/8 | - | - | 44.2K | 44.2K | - | - | |
| 4201 | 30X7 BU | 300 | 36 | - | 7 | 2 | 26 | 5/8 | - | - | 44.2K | 44.2K | - | - | |
| 4202 | 30X7 BU | 300 | 36 | - | 7 | 2 | 26 | 5/8 | - | - | 485A | 292B | - | - | |
| 4203 | 30X7 BU | 300 | 36 | - | 7 | 2 | 26 | 5/8 | - | - | 292B | 292B | - | - | |
| 4204 | 30X7 BU | 300 | 36 | - | 7 | 2 | 26 | 5/8 | - | - | 292B | 500A | - | - | |
| 4205 | 30X7 BU | 300 | 36 | - | 7 | 2 | 26 | 5/8 | - | - | 500A | 292B | - | - | X |
| 4206 | 30X7 BU | 300 | 36 | - | 7 | 2 | 26 | 5/8 | - | - | 292B | 292B | - | - | |
| 4207 | 30X7 BU | 300 | 36 | - | 7 | 2 | 26 | 5/8 | - | - | 292B | 485A | - | - | |
| 4208 | 18X4 CH | 509 | 50 | 18CH45.8 | - | - | - | - | - | - | 253A | 246A | - | - | |
| 4209 | - | 100 | 36 | 18CH42.7 | - | - | - | - | - | - | 410A | 411A | - | - | |
| 4210 | 18X4 CH | 100 | 50 | 18CH42.7 | - | - | - | - | - | - | 246A | 249A | - | - | |
| 4211 | 18X4 CH | 508 | 50 | 18CH42.7 | 2-7/8 | 7/8 | - | - | 24FT 0 | 1FT 0 | 249A | 246A | - | - | |
| 4212 | - | 100 | 36 | 18CH42.7 | - | - | - | - | - | - | 412A | 410A | - | - | |
| 4213 | - | 100 | 50 | 18CH45.8 | - | - | - | - | - | - | 246A | 253A | - | - | |
| 4214 | - | 100 | 36 | 16B31 | - | - | - | - | - | - | 396A | 220G | - | - | |
| 4215 | - | 100 | 36 | 16B31 | - | - | - | - | - | - | 220G | 396A | - | - | |
| 4216 | - | 100 | 36 | 16B31 | - | - | - | - | - | - | 396A | 205I | - | - | 1 |
| 4217 | - | 100 | 36 | 8B13 | - | - | - | - | - | - | 111H | 111H | - | - | |
| 4218 | 16X5-1/2BX | 204 | 36 | - | 4 | 1/4 | 16 | 3/4 | - | - | 328A | 225A | - | - | |
| 4219 | - | 100 | 36 | 16B31 | - | - | - | - | - | - | 364C | 364D | - | - | |
| 4220 | - | 100 | 36 | 16WF36 | - | - | - | - | - | - | 26.5K | 26.5K | - | - | |
| 4221 | - | 100 | 36 | 16B31 | - | - | - | - | - | - | 364D | 364C | - | - | |
| 4222 | - | 100 | 36 | 16WF40 | - | - | - | - | - | - | 106F | 215B | (8) | 3/4X3B | |
| 4223 | - | 100 | 36 | 7CH17.6 | - | - | - | - | - | - | 521 | 521 | - | - | |
| 4224 | 21X7 BU | 300 | 36 | - | 7 | 1 | 19 | 1/2 | - | - | 315 | 242 | - | - | |
| 4225 | - | 100 | 50 | 14B22 | - | - | - | - | - | - | 313G | 370J | (20) | 3/4X3 | |
| 4226 | - | 100 | 36 | 14B22 | - | - | - | - | - | - | 26.5K | 26.5K | - | - | |
| 4227 | 16X5-1/2BX | 201 | 36 | - | 4 | 1/4 | 16 | 3/4 | - | - | 397A | 328A | - | - | |
| 4228 | - | 100 | 36 | 16B31 | - | - | - | - | - | - | 364C | 205I | - | - | 1 |
| 4229 | - | 100 | 50 | 16WF36 | - | - | - | - | - | - | 171A | 208I | (39) | 3/4X3D | |
| 4230 | - | 100 | 50 | 16WF36 | - | - | - | - | - | - | 208I | 26.5K | (39) | 3/4X3D | |
| 4231 | - | 100 | 50 | 16WF36 | - | - | - | - | - | - | 26.5K | 26.5K | 8 | 3/4X3 | |
| 4232 | - | 100 | 36 | 16B26 | - | - | - | - | - | - | 203B | 106K | 8 | 3/4X3 | |
| 4233 | - | 100 | 50 | 16WF36 | - | - | - | - | - | - | 26.5K | 26.5K | 8 | 3/4X3 | |

REMARKS

1 DETAIL 521 RIGHT END OF BEAM

LICENSED PROFESSIONAL ENGINEER — LESLIE E. ROBERTSON — No. 34960 — UNIVERSITY OF THE STATE OF NEW YORK

5-AP1-127

**SKILLING-HELLE-CHRISTIANSEN-ROBERTSON** — **Civil & Structural Engineers**

PROJECT: THE WORLD TRADE CENTER | TITLE: BEAM SCHEDULE TOWERS A AND B | DATE: 2/12/68

REVISIONS

| BEAM NO. | SIZE | TYPE | FY | SHAPE | PLATE 1 WIDTH | PLATE 1 THICK | PLATE 2 WIDTH | PLATE 2 THICK | DIMENSIONS LENGTH | DIMENSIONS DIM. A | SUPPORTS LEFT | SUPPORTS RIGHT | STUDS NO. | STUDS SIZE | REMARKS |
|---|---|---|---|---|---|---|---|---|---|---|---|---|---|---|---|
| 4234 | - | 100 | 50 | 16WF36 | - | - | - | - | - | - | 26.5K | 208I | 39 | 3/4X3D | |
| 4235 | - | 100 | 50 | 16WF36 | - | - | - | - | - | - | 208I | 171A | 39 | 3/4X3K | |
| 4236 | - | 100 | 36 | 16WF40 | - | - | - | - | - | - | 208H | 287G | 39 | 3/4X3 | |
| 4237 | - | 100 | 50 | 12B16.5 | - | - | - | - | - | - | 26.5K | 26.5K | 18 | 3/4X3 | |
| 4238 | - | 100 | 50 | 12B16.5 | - | - | - | - | - | - | 26.5K | 26.5K | 26 | 3/4X3 | |
| 4239 | - | 100 | 50 | 16WF36 | - | - | - | - | - | - | 208I | 26.5K | 12 | 3/4X3C | |
| 4240 | - | 100 | 50 | 12B16.5 | - | - | - | - | - | - | 26.5K | 26.5K | 15 | 3/4X3 | |
| [illegible] | - | 100 | 50 | 16WF36 | - | - | - | - | - | - | 111M | 179A | 15 | 3/4X3C | |
| [illegible] | - | 100 | 50 | 16B26 | - | - | - | - | - | - | 203B | 26.5K | 20 | 3/4X3 | |
| 4243 | - | 100 | 50 | 16B26 | - | - | - | - | - | - | 105L | 26.5K | 20 | 3/4X3 | |
| 4244 | - | 100 | 50 | 16WF36 | - | - | - | - | - | - | 111M | 26.5K | 12 | 3/4X3C | |
| 4245 | - | 100 | 50 | 12B16.5 | - | - | - | - | - | - | 26.5K | 26.5K | 15 | 3/4X3 | |
| 4246 | - | 100 | 50 | 12B16.5 | - | - | - | - | - | - | 26.5K | 26.5K | 15 | 3/4X3 | |
| 4247 | - | 100 | 50 | 16WF36 | - | - | - | - | - | - | 208I | 26.5K | 12 | 3/4X3C | |
| 4248 | - | 100 | 50 | 12B16.5 | - | - | - | - | - | - | 26.5K | 26.5K | 15 | 3/4X3 | |
| 4249 | - | 100 | 36 | 14B22 | - | - | - | - | - | - | 26.5K | 26.5K | - | - | |
| 4250 | - | 100 | 36 | 16B31 | - | - | - | - | - | - | 201F | 111U | 12 | 3/4X3 | |
| 4251 | - | 100 | 36 | 14B22 | - | - | - | - | - | - | 26.5K | 26.5K | - | - | |
| 4252 | - | 100 | 36 | 16B31 | - | - | - | - | - | - | 201F | 111U | 12 | 3/4X3 | |
| 4253 | - | 100 | 36 | 14B22 | - | - | - | - | - | - | 179A | 26.5K | - | - | |
| 4254 | - | 100 | 50 | 14B22 | - | - | - | - | - | - | 313G | 370J | 20 | 3/4X3 | |
| [illegible] | - | 100 | 36 | 14B22 | - | - | - | - | - | - | 26.5K | 26.5K | - | - | |
| [illegible] | - | 100 | 36 | 16B31 | - | - | - | - | - | - | 201F | 111U | 12 | 3/4X3 | |
| [illegible] | - | 100 | 36 | 14B22 | - | - | - | - | - | - | 26.5K | 26.5K | - | - | |
| [illegible] | - | 100 | 36 | 16B31 | - | - | - | - | - | - | 201F | 111U | 12 | 3/4X3 | |
| 4259 | - | 100 | 36 | 14B22 | - | - | - | - | - | - | 26.5K | 26.5K | - | - | |
| 4260 | 16X5-1/2B | 402 | 36 | 16B31 | 4 | 3/8 | - | - | 18FT 0 | - | 26.5K | 26.5K | - | - | |
| 4261 | 16X5-1/2B | 402 | 36 | 16B31 | 4 | 3/8 | - | - | 18FT 0 | - | 26.5K | 26.5K | - | - | |
| 4262 | 16X5-1/2B | 402 | 36 | 16B31 | 4 | 3/8 | - | - | 18FT 0 | - | 26.5K | 26.5K | - | - | |
| 4263 | 16X5-1/2B | 402 | 36 | 16B31 | 4 | 3/8 | - | - | 18FT 0 | - | 26.5K | 26.5K | - | - | |
| [illegible] | 16X5-1/2B | 402 | 36 | 16B31 | 4 | 3/8 | - | - | 18FT 0 | - | 26.5K | 26.5K | - | - | |
| [illegible] | 16X5-1/2B | 402 | 36 | 16B31 | 4 | 3/8 | - | - | 18FT 0 | - | 26.5K | 26.5K | - | - | |
| 4266 | 16X7 WF | 402 | 36 | 16WF40 | 4 | 3/8 | - | - | 18FT 0 | - | 172A | 204A | 39 | 3/4X3 | |

LICENSED PROFESSIONAL ENGINEER LESLIE E. ROBERTSON 19360 UNIVERSITY OF THE STATE OF NEW YORK

**SKILLING-HELLE-CHRISTIANSEN-ROBERTSON** — Civil & Structural Engineers

PROJECT: THE WORLD TRADE CENTER | TITLE: BEAM SCHEDULE TOWERS A AND B | DATE: 2/12/68

REVISIONS

| BEAM NO. | SIZE | TYPE | FY | SHAPE | PLATE 1 WIDTH | PLATE 1 THICK | PLATE 2 WIDTH | PLATE 2 THICK | DIMENSIONS LENGTH | DIMENSIONS DIM. A | SUPPORTS LEFT | SUPPORTS RIGHT | STUDS NO. | STUDS SIZE | REMARKS |
|---|---|---|---|---|---|---|---|---|---|---|---|---|---|---|---|
| 4267 | 16X7 WF | 402 | 36 | 16WF40 | 4 | 3/8 | - | - | 12FT 0 | - | 401A | 401A | 39 | 3/4X3 | |
| 4268 | 16X7 WF | 402 | 36 | 16WF40 | 4 | 3/8 | - | - | 18FT 0 | - | 204A | 204A | 49 | 3/4X3 | |
| 4269 | 16X7 WF | 402 | 36 | 16WF40 | 4 | 3/8 | - | - | 18FT 0 | - | 204B | 204A | 49 | 3/4X3 | |
| 4270 | 16X7 WF | 402 | 36 | 16WF40 | 4 | 3/8 | - | - | 12FT 0 | - | 401A | 401A | 39 | 3/4X3 | |
| 4271 | 16X7 WF | 402 | 36 | 16WF40 | 4 | 3/8 | - | - | 18FT 0 | - | 204A | 172A | 39 | 3/4X3 | |
| 4272 | 16X 5-1/2BX | 200 | 36 | - | 4 | 3/8 | 16 | 3/4 | - | - | 206 | 26.5K | - | - | X |
| 4273 | - | 100 | 50 | 14B22 | - | - | - | - | - | - | 235C | 335B | 34 | 3/4X3 | |
| 4274 | - | 600 | 36 | 68X15.4 | - | - | - | - | - | - | 451 | 384A | - | - | 3 |
| 4275 | - | 600 | 36 | 68X15.4 | - | - | - | - | - | - | 384A | 451 | - | - | 3 |
| 4276 | - | 600 | 36 | 68X15.4 | - | - | - | - | - | - | 451 | 498 | - | - | 3 |
| 4277 | - | 600 | 36 | 68X15.4 | - | - | - | - | - | - | 451 | 386A | - | - | 3 |
| 4278 | - | 600 | 36 | 68X15.4 | - | - | - | - | - | - | 520 | 518 | - | - | 3,4 |
| 4279 | - | 600 | 36 | 68X15.4 | - | - | - | - | - | - | 499 | 499 | - | - | 3 |
| 4280 | - | 600 | 36 | 68X15.4 | - | - | - | - | - | - | 499 | 387A | - | - | 3 |
| 4281 | - | 100 | 36 | 12CH20.7 | - | - | - | - | - | - | 26.5K | 26.5K | - | - | |
| 4282 | - | 100 | 50 | 12B16.5 | - | - | - | - | - | - | 175A | 26.5K | 8 | 3/4X3 | |
| 4283 | - | 100 | 36 | 8B13 | - | - | - | - | - | - | 111N | 105C | - | - | |
| 4284 | - | 100 | 36 | 12B16.5 | - | - | - | - | - | - | 111K | 111K | 8 | 3/4X3 | |
| 4285 | - | 100 | 50 | 14B22 | - | - | - | - | - | - | 26.5K | 26.5K | 34 | 3/4X3 | |
| 4286 | - | 100 | 36 | 12B19 | - | - | - | - | - | - | 111H | 26.5K | - | - | |
| 4287 | - | 100 | 50 | 14B22 | - | - | - | - | - | - | 26.5K | 26.5K | 34 | 3/4X3 | |
| 4288 | - | 100 | 36 | 14B22 | - | - | - | - | - | - | 283M | 26.5K | - | - | |
| 4289 | - | 100 | 50 | 16B26 | - | - | - | - | - | - | 208B | 335E | 19 | 3/4X3 | |
| 4290 | - | 100 | 36 | 16B31 | - | - | - | - | - | - | 217B | 335E | 19 | 3/4X3 | |
| 4291 | - | 100 | 36 | 14B22 | - | - | - | - | - | - | 283M | 170C | 18 | 3/4X3 | |
| 4292 | - | 100 | 50 | 14B22 | - | - | - | - | - | - | 26.5K | 26.5K | 19 | 3/4X3 | |
| 4293 | - | 100 | 36 | 12B19 | - | - | - | - | - | - | 111H | 26.5K | - | - | |
| 4294 | - | 100 | 50 | 16B32 | - | - | - | - | - | - | 26.5K | 26.5K | 19 | 3/4X3 | |
| 4295 | - | 100 | 36 | 16WF50 | - | - | - | - | - | - | 812D | 205H | - | - | |
| 4296 | - | 100 | 36 | 16WF50 | - | - | - | - | - | - | 401C | 401C | - | - | |
| 4297 | - | 100 | 36 | 16WF50 | - | - | - | - | - | - | 810A | 335E | - | - | 1 |
| 4298 | - | 100 | 36 | 16WF50 | - | - | - | - | - | - | 335E | 810A | - | - | 2 |
| 4299 | - | 100 | 36 | 16WF50 | - | - | - | - | - | - | 401C | 401C | - | - | |

REMARKS

1. DETAIL 405 RIGHT END OF BEAM
2. DETAIL 405 LEFT END OF BEAM
3. STANDARD STRUCTURAL TUBING 6X4X1/4
4. DETAIL 389 FOR BOTH INTERMEDIATE SUPPORTS

LICENSED PROFESSIONAL ENGINEER — LESLIE E. ROBERTSON — No. 34360 — REGISTERED IN THE STATE OF NEW YORK

5-AB1-129

**SKILLING-HELLE-CHRISTIANSEN-ROBERTSON** — **Civil & Structural Engineers**

PROJECT: THE WORLD TRADE CENTER | TITLE: BEAM SCHEDULE TOWERS A AND B | DATE: 1/22/68

REVISIONS

| BEAM NO. | SIZE | TYPE | FY | SHAPE | PLATE 1 WIDTH | PLATE 1 THICK | PLATE 2 WIDTH | PLATE 2 THICK | DIMENSIONS LENGTH | DIMENSIONS DIM. A | SUPPORTS LEFT | SUPPORTS RIGHT | STUDS NO. | STUDS SIZE | REMARKS |
|---|---|---|---|---|---|---|---|---|---|---|---|---|---|---|---|
| 4300 | - | 100 | 36 | 16WF50 | - | - | - | - | - | - | 205H | 812C | - | - | |
| 4301 | - | 100 | 36 | 8B13 | - | - | - | - | - | - | 17.7K | 17.7K | 12 | 3/4X3 | |
| 4302 | 16X4 BX | 200 | 36 | - | 2-1/2 | 3/8 | 16 | 3/4 | - | - | 247F | 294B | - | - | |
| 4303 | - | 100 | 36 | 8B13 | - | - | - | - | - | - | 17.4K | 17.4K | 12 | 3/4X3 | |
| 4304 | 16X4 BX | 200 | 36 | - | 2-1/2 | 3/8 | 16 | 3/4 | - | - | 372A | 282A | - | - | |
| 4305 | - | 100 | 36 | 16B26 | - | - | - | - | - | - | 26.5K | 208B | 10 | 3/4X3 | |
| 4306 | - | 100 | 36 | 16B26 | - | - | - | - | - | - | 111K | 111K | 8 | 3/4X3 | |
| 4307 | - | 100 | 36 | 16B26 | - | - | - | - | - | - | 283M | 337B | 8 | 3/4X3B | |
| 4308 | - | 100 | 36 | 8B13 | - | - | - | - | - | - | 17.4K | 17.4K | 12 | 3/4X3 | |
| 4309 | 16X4 BX | 200 | 36 | - | 2-1/2 | 3/8 | 16 | 3/4 | - | - | 247F | 294B | - | - | |
| 4310 | - | 100 | 36 | 8B13 | - | - | - | - | - | - | 17.4K | 17.4K | 12 | 3/4X3 | |
| 4311 | - | 404 | 36 | 16WF50 | - | - | - | - | - | - | 338F | 294B | 26 | 3/4X3 | |
| 4312 | - | 404 | 36 | 16WF50 | - | - | - | - | - | - | 294B | 282A | 26 | 3/4X3 | |
| 4313 | - | 404 | 36 | 16WF50 | - | - | - | - | - | - | 337B | 294B | 26 | 3/4X3 | |
| 4314 | - | 404 | 36 | 16WF50 | - | - | - | - | - | - | 294B | 338F | 26 | 3/4X3 | |
| 4315 | - | 100 | 36 | 16B26 | - | - | - | - | - | - | 208B | 217B | 8 | 3/4X3 | |
| 4316 | - | 100 | 50 | 12B16.5 | - | - | - | - | - | - | 26.5K | 26.5K | 15 | 3/4X3 | |
| 4317 | - | 100 | 50 | 12B16.5 | - | - | - | - | - | - | 26.5K | 26.5K | 15 | 3/4X3 | |
| 4318 | - | 100 | 50 | 16B26 | - | - | - | - | - | - | 26.5K | 26.5K | 16 | 3/4X3B | |
| 4319 | - | 100 | 50 | 16B26 | - | - | - | - | - | - | 26.5K | 26.5K | 15 | 3/4X3B | |
| 4320 | - | 100 | 50 | 16B26 | - | - | - | - | - | - | 26.5K | 26.5K | 15 | 3/4X3 | |
| 4321 | - | 100 | 50 | 16B26 | - | - | - | - | - | - | 335E | 26.5K | 15 | 3/4X3 | |
| 4322 | - | 100 | 50 | 16B26 | - | - | - | - | - | - | 812G | 26.5K | 15 | 3/4X3 | |
| 4323 | - | 100 | 50 | 16B26 | - | - | - | - | - | - | 26.5K | 26.5K | 15 | 3/4X3 | |
| 4324 | - | 100 | 50 | 16B26 | - | - | - | - | - | - | 26.5K | 26.5K | 40 | 3/4X3 | |
| 4325 | - | 100 | 50 | 16B26 | - | - | - | - | - | - | 26.5K | 26.5K | 18 | 3/4X3B | |
| 4326 | - | 100 | 50 | 16WF40 | - | - | - | - | - | - | 220I | 279A | 47 | 3/4X3 | |
| 4327 | - | 100 | 50 | 16WF40 | - | - | - | - | - | - | 279A | 279A | 47 | 3/4X3 | |
| 4328 | - | 100 | 50 | 16WF40 | - | - | - | - | - | - | 279A | 279A | 47 | 3/4X3 | |
| 4329 | - | 100 | 36 | 16WF36 | - | - | - | - | - | - | 279A | 279A | 8 | 3/4X3 | |
| 4330 | - | 100 | 50 | 16WF40 | - | - | - | - | - | - | 279A | 279A | 47 | 3/4X3 | |
| 4331 | - | 100 | 50 | 16WF40 | - | - | - | - | - | - | 279A | 220I | 47 | 3/4X3 | |
| 4332 | - | 100 | 50 | 21WF55 | - | - | - | - | - | - | 35.3K | 279A | 15 | 3/4X3B | |
| 4333 | - | 100 | 50 | 21WF55 | - | - | - | - | - | - | 170F | 279A | 15 | 3/4X3B | |

LICENSED PROFESSIONAL ENGINEER — LESLIE E. ROBERTSON — No. 34360 — STATE OF NEW YORK

S-481-130

REVISIONS

**SKILLING-HELLE-CHRISTIANSEN-ROBERTSON** — **Civil & Structural Engineers**

PROJECT: THE WORLD TRADE CENTER | TITLE: BEAM SCHEDULE TOWERS A AND B | DATE: 3/13/68

| BEAM NO. | SIZE | TYPE | FY | SHAPE | PLATE 1 WIDTH | PLATE 1 THICK | PLATE 2 WIDTH | PLATE 2 THICK | DIMENSIONS LENGTH | DIMENSIONS DIM. A | SUPPORTS LEFT | SUPPORTS RIGHT | STUDS NO. | STUDS SIZE | REMARKS |
|---|---|---|---|---|---|---|---|---|---|---|---|---|---|---|---|
| 4334 | - | 100 | 50 | 21WF55 | - | - | - | - | - | - | 307H | 279A | 15 | 3/4X3 | |
| 4335 | - | 100 | 50 | 21WF55 | - | - | - | - | - | - | 35.3K | 279A | 84 | 3/4X3 | |
| 4336 | - | 100 | 50 | 21WF55 | - | - | - | - | - | - | 35.3K | 279A | 84 | 3/4X3 | |
| 4337 | - | 100 | 36 | 16WF45 | - | - | - | - | - | - | 201 | 105 | - | - | |
| 4338 | - | 100 | 50 | 14B22 | - | - | - | - | - | - | 335B | 235C | 34 | 3/4X3 | |
| 4339 | - | 100 | 50 | 14B22 | - | - | - | - | - | - | 335B | 235C | 34 | 3/4X3 | X |
| 4340 | - | 100 | 36 | 12B16.5 | - | - | - | - | - | - | 26.5K | 26.5K | - | - | |
| 4341 | - | 100 | 36 | 12WF45 | - | - | - | - | - | - | 213 | 201 | - | - | |
| 4342 | - | 100 | 36 | 12B19 | - | - | - | - | - | - | 503 | 213 | - | - | |
| 4343 | - | 100 | 36 | 16B31 | - | - | - | - | - | - | 2548 | 335B | - | - | 3 |
| 4344 | - | 100 | 36 | 16B31 | - | - | - | - | - | - | 335B | 2548 | - | - | 4 |
| 4345 | - | 100 | 36 | 12B19 | - | - | - | - | - | - | 505 | 17.4K | - | - | |
| 4346 | - | 100 | 36 | 12B19 | - | - | - | - | - | - | 503 | 336 | - | - | |
| 4347 | - | 100 | 36 | 16WF58 | - | - | - | - | - | - | 463B | 463A | 14 | 3/4X3 | |
| 4348 | - | 100 | 36 | 16WF50 | - | - | - | - | - | - | 812E | 205H | - | - | |
| 4349 | - | 100 | 36 | 16WF50 | - | - | - | - | - | - | 401C | 401C | - | - | |
| 4350 | - | 100 | 36 | 16WF50 | - | - | - | - | - | - | - | 335E | - | - | 1, 7 |
| 4351 | - | 100 | 36 | 16WF50 | - | - | - | - | - | - | 307H | - | - | - | 2, 8 |
| 4352 | - | 100 | 36 | 16WF50 | - | - | - | - | - | - | 401C | 401C | - | - | |
| 4353 | - | 100 | 36 | 16WF50 | - | - | - | - | - | - | 205H | 812C | - | - | |
| 4354 | - | 100 | 36 | 24179.9 | - | - | - | - | - | - | 202C | 812E | - | - | |
| 4355 | - | 100 | 36 | 14WF30 | - | - | - | - | - | - | 463A | 463B | 14 | 3/4X3 | |
| 4356 | - | 100 | 36 | 24179.9 | - | - | - | - | - | - | 234B | 812D | - | - | |
| 4357 | - | 100 | 36 | 24179.9 | - | - | - | - | - | - | 812D | 202C | - | - | |
| 4358 | - | 100 | 36 | 24WF76 | - | - | - | - | - | - | 370H | 812C | 44 | 3/4X3 | |
| 4359 | - | 100 | 36 | 12B16.5 | - | - | - | - | - | - | 17.4K | 505 | - | - | |
| 4360 | - | 100 | 36 | 12B16.5 | - | - | - | - | - | - | 17.4K | 17.4K | - | - | |
| 4361 | - | 100 | 36 | 24WF76 | - | - | - | - | - | - | 812C | 370H | 44 | 3/4X3 | |
| 4362 | - | 409 | 36 | 27WF84 | - | - | - | - | - | 1FT 5 | 271A | 261A | 48 | 3/4X3 | |
| 4363 | - | 100 | 36 | 24WF94 | - | - | - | - | - | - | 449A | 430A | 30 | 3/4X3 | |
| 4364 | 24X9WF | 409 | 36 | 24WF94 | T- | 1/2 | | | - | 1FT 5 | 261A | 272A | 65 | 3/4X3 | 6 |
| 4365 | - | 100 | 36 | 24WF76 | - | - | - | - | - | - | 272A | 272A | 18 | 3/4X3 | |
| 4366 | - | 434 | 36 | 2 WF84 | - | - | - | - | - | - | 272A | 261A | 48 | 3/4X3 | |

REMARKS

1 DETAIL 406 RIGHT END OF BEAM
2 DETAIL 406 LEFT END OF BEAM
3 DETAIL 406 RIGHT END OF BEAM
4 DETAIL 406 LEFT END OF BEAM
6 SEE BEAM TYPE 402 5-AB2-11 FOR SCHEDULED PLATE I
7 SEE 6-AB5-4, FOR LEFT CONN. DET.
8 SEE 6-AB5-4, FOR RIGHT CONN. DET.

LICENSED PROFESSIONAL ENGINEER — LESLIE E. ROBERTSON — No. 34360 — UNIVERSITY OF THE STATE OF NEW YORK

5-AB1-131

**SKILLING-HELLE-CHRISTIANSEN-ROBERTSON** — **Civil & Structural Engineers**

PROJECT: THE WORLD TRADE CENTER | TITLE: BEAM SCHEDULE TOWERS A AND 8 | DATE: 1/22/68

REVISIONS

| BEAM NO. | SIZE | TYPE | FY | SHAPE | PLATE 1 WIDTH | PLATE 1 THICK | PLATE 2 WIDTH | PLATE 2 THICK | DIMENSIONS LENGTH | DIMENSIONS DIM. A | SUPPORTS LEFT | SUPPORTS RIGHT | STUDS NO. | STUDS SIZE | REMARKS |
|---|---|---|---|---|---|---|---|---|---|---|---|---|---|---|---|
| 4367 | - | 100 | 36 | 27WF84 | - | - | - | - | - | - | 430A | 430A | 30 | 3/4X3 | |
| 4368 | - | 409 | 36 | 27WF84 | - | - | - | - | - | 1FT 5 | 261A | 271A | 48 | 3/4X3 | |
| 4369 | - | 409 | 36 | 27WF84 | - | - | - | - | - | 1FT 5 | 271A | 261A | 48 | 3/4X3 | |
| 4370 | - | 100 | 36 | 27WF84 | - | - | - | - | - | - | 430A | 430A | 30 | 3/4X3 | |
| 4371 | - | 434 | 36 | 27WF84 | - | - | - | - | - | - | 261A | 272A | 48 | 3/4X3 | |
| 4372 | - | 100 | 36 | 24WF76 | - | - | - | - | - | - | 272A | 272A | 18 | 3/4X3 | X |
| 4373 | - | 409 | 36 | 24WF94 | - | - | - | - | - | 1FT 5 | 272A | 261A | 48 | 3/4X3 | |
| 4374 | - | 100 | 36 | 27WF84 | - | - | - | - | - | - | 449A | 430A | 30 | 3/4X3 | |
| 4375 | - | 409 | 36 | 27WF84 | - | - | - | - | - | 1FT 5 | 261A | 271A | 48 | 3/4X3 | |
| 4376 | - | 100 | 36 | 12B19 | - | - | - | - | - | - | 26.5K | 26.5K | - | - | |
| 4377 | 16X5-1/2BX | 200 | 36 | - | 4 | 3/8 | 16 | 3/4 | - | - | 26.5K | 26.5K | - | - | |
| 4378 | 16X5-1/2BX | 200 | 36 | - | 4 | 3/8 | 16 | 3/4 | - | - | 206A | 254A | - | - | |
| 4379 | - | 100 | 36 | 14B22 | - | - | - | - | - | - | 301A | 303A | - | - | |
| 4380 | - | 100 | 36 | 12WF31 | - | - | - | - | - | - | 516 | 26.5K | - | - | |
| 4381 | - | 100 | 36 | 12B19 | - | - | - | - | - | - | 105A | 26.5K | - | - | |
| 4382 | - | 100 | 50 | 16WF78 | - | - | - | - | - | - | 814B | 378C | 20 | 3/4X3 | |
| 4383 | - | 100 | 36 | 12B16.5 | - | - | - | - | - | - | 175A | 26.5K | - | - | |
| 4384 | - | 100 | 36 | 14B22 | - | - | - | - | - | - | 283I | 26.5K | - | - | |
| 4385 | - | 100 | 36 | 16B26 | - | - | - | - | - | - | 280A | 301A | - | - | |
| 4386 | - | 100 | 36 | 12CH20.7 | - | - | - | - | - | - | 26.5K | 26.5K | - | - | |
| 4387 | - | 100 | 36 | 16B26 | - | - | - | - | - | - | 357B | 301A | - | - | |
| 4388 | - | 100 | 36 | 14B22 | - | - | - | - | - | - | 283I | 170C | 18 | 3/4X3 | |
| 4389 | - | 100 | 50 | 16WF78 | - | - | - | - | - | - | 378C | 814B | 20 | 3/4X3 | |
| 4390 | - | 458 | 50 | 16WF78 | - | - | - | - | - | - | 814B | 378C | 20 | 3/4X3 | |
| 4391 | 16X8 BX | 220 | 50 | - | 7-1/4 | 1- 1/4 | 16 | 3/8 | - | - | 380C | 889A | 20 | 3/4X3 | |
| 4392 | - | 100 | 36 | 8B13 | - | - | - | - | - | - | 17.4K | 17.4K | - | - | |
| 4393 | - | 100 | 50 | 16WF78 | - | - | - | - | - | - | 814B | 378C | 20 | 3/4X3 | |
| 4394 | - | 100 | 36 | 12B22 | - | - | - | - | - | - | 283I | 386A | - | - | |
| 4395 | - | 100 | 36 | 8B13 | - | - | - | - | - | - | 111H | 105H | - | - | |
| 4396 | - | 100 | 36 | 14B22 | - | - | - | - | - | - | 516 | 280A | - | - | |
| 4397 | - | 100 | 50 | 16WF78 | - | - | - | - | - | - | 378C | 814B | 20 | 3/4X3 | |
| 4398 | 16X8 BX | 220 | 50 | - | 7-1/4 | 1- 1/4 | 16 | 3/8 | - | - | 889A | 380C | 20 | 3/4X3 | |
| 4399 | - | 100 | 36 | 16B31 | - | - | - | - | - | - | 220I | 364C | - | - | |

LICENSED PROFESSIONAL ENGINEER — LESLIE E. ROBERTSON — No. 34360 — UNIVERSITY OF THE STATE OF NEW YORK

5-AB1-132

**SKILLING-HELLE-CHRISTIANSEN-ROBERTSON** — **Civil & Structural Engineers**

PROJECT: THE WORLD TRADE CENTER | TITLE: BEAM SCHEDULE TOWERS A AND B | DATE: 7/17/68

REVISIONS

| BEAM NO. | SIZE | TYPE | FY | SHAPE | PLATE 1 WIDTH | PLATE 1 THICK | PLATE 2 WIDTH | PLATE 2 THICK | DIMENSIONS LENGTH | DIMENSIONS DIM. A | SUPPORTS LEFT | SUPPORTS RIGHT | STUDS NO. | STUDS SIZE | REMARKS |
|---|---|---|---|---|---|---|---|---|---|---|---|---|---|---|---|
| 4400 | - | 100 | 36 | 16B31 | | - | - | - | - | - | 364C | 364C | - | - | |
| 4401 | - | 100 | 36 | 16B31 | - | - | - | - | - | - | 364C | 220I | - | - | |
| 4402 | - | 100 | 36 | 16B31 | - | - | - | - | - | - | 220I | 364C | - | - | |
| 4403 | - | 100 | 36 | 16B31 | - | - | - | - | - | - | 364C | 364C | - | - | |
| 4404 | - | 100 | 36 | 16B31 | - | - | - | - | - | - | 364C | 220I | - | - | |
| 4405 | - | 600 | 36 | 6BX15.4 | - | - | - | - | - | - | 387A | 451 | - | - | 2 |
| 4406 | - | 100 | 36 | 16WF58 | - | - | - | - | - | - | 463A | 463A | 14 | 3/4X3 | |
| 4407 | - | 100 | 36 | 16WF58 | - | - | - | - | - | - | 463A | 463B | 28 | 3/4X3 | |
| 4408 | - | 100 | 36 | 16B26 | - | - | - | - | - | - | 418A | 418A | - | - | |
| 4409 | - | 100 | 36 | 8B13 | - | - | - | - | - | - | 111H | 105H | - | - | |
| 4410 | - | 100 | 36 | 16B26 | - | - | - | - | - | - | 418A | 418A | - | - | |
| 4411 | - | 100 | 36 | 8B13 | - | - | - | - | - | - | 214A | 111H | - | - | |
| 4412 | 16X4 BX | 200 | 36 | - | 2-1/2 | 3/8 | 16 | 3/4 | - | - | 296A | 385A | - | - | |
| 4413 | - | 100 | 36 | 16B26 | - | - | - | - | - | - | 418A | 508 | - | - | |
| * 4414 | - | 100 | 36 | 16B26 | - | - | - | - | - | - | 201E | 283I | 40 | 3/4X3 | |
| 4415 | - | 100 | 36 | 12B16.5 | - | - | - | - | - | - | 26.5K | 26.5K | - | - | |
| 4416 | - | 100 | 36 | 16B26 | - | - | - | - | - | - | 418B | 26.5K | - | - | 3 |
| 4417 | - | 100 | 36 | 12B19 | - | - | - | - | - | - | 503A | 503A | - | - | |
| 4418 | - | 100 | 36 | 12B19 | - | - | - | - | - | - | 26.5K | 26.5K | - | - | |
| 4419 | - | 100 | 36 | 16B26 | - | - | - | - | - | - | 418A | 509A | - | - | |
| 4420 | - | 100 | 36 | 16B26 | - | - | - | - | - | - | 497 | 418A | - | - | |
| 4421 | - | 100 | 36 | 16B26 | - | - | - | - | - | - | 418A | 508 | - | - | |
| 4422 | - | 100 | 36 | 16B26 | - | - | - | - | - | - | 509A | 509A | - | - | |
| 4423 | - | 100 | 36 | 10WF21 | - | - | - | - | - | - | 350C | 17.4K | - | - | 4 |
| 4424 | - | 100 | 36 | 10WF21 | - | - | - | - | - | - | 111H | 17.4K | - | - | |
| 4425 | | 100 | 36 | 16B26 | | | | | - | - | 508 | 418A | - | - | |
| 4426 | - | 100 | 36 | 16B26 | - | - | - | - | - | - | 418A | 497 | - | - | |
| 4427 | - | 100 | 36 | 16B26 | - | - | - | - | - | - | 509A | 418A | - | - | |
| 4428 | - | 100 | 36 | 10WF21 | - | - | - | - | - | - | 17.7K | 509A | - | - | |
| 4429 | - | 100 | 36 | 12B19 | - | - | - | - | - | - | 26.5K | 503A | - | - | |
| 4430 | - | 100 | 50 | 16WF78 | - | - | - | - | - | - | 378C | 814B | 20 | 3/4X3 | |
| 4431 | - | 600 | 36 | 6BX15.4 | - | - | - | - | - | - | 388A | 516 | - | - | 2 |
| 4432 | - | 600 | 36 | 6BX15.4 | - | - | - | - | - | - | 516 | 516 | - | - | 1,2 |
| 4433 | - | 600 | 36 | 6BX15.4 | - | - | - | - | - | - | 388A | 516 | - | - | 1,2 |

LICENSED PROFESSIONAL ENGINEER ★ LESLIE E. ROBERTSON ★ No. 34360 ★ UNIVERSITY OF THE STATE OF NEW YORK

**REMARKS**

1 DETAIL 389 CENTER SUPPORT OF BEAM
2 STANDARD STRUCTURAL TUBING 6X4X1/4
3 DETAIL 512 INTERMEDIATE SUPPORT OF BEAM
4 DETAIL 350D, LEFT SUPPORT, TOWER B ONLY
* HOLD

5-A81-133

**SKILLING-HELLE-CHRISTIANSEN-ROBERTSON** — Civil & Structural Engineers

PROJECT: THE WORLD TRADE CENTER | TITLE: BEAM SCHEDULE TOWERS A AND B | DATE: 7/17/68

REVISIONS

| BEAM NO. | SIZE | TYPE | FY | SHAPE | PLATE 1 WIDTH | PLATE 1 THICK | PLATE 2 WIDTH | PLATE 2 THICK | DIMENSIONS LENGTH | DIMENSIONS DIM. A | SUPPORTS LEFT | SUPPORTS RIGHT | STUDS NO. | STUDS SIZE | REMARKS |
|---|---|---|---|---|---|---|---|---|---|---|---|---|---|---|---|
| * 4434 | - | 100 | 36 | 16WF36 | - | - | - | - | - | - | 26.5K | 26.5K | - | - | |
| 4435 | - | 100 | 36 | 16B26 | - | - | - | - | - | - | 508 | 418A | - | - | |
| * 4436 | - | 100 | 36 | 16WF40 | - | - | - | - | - | - | 26.5K | 26.5K | - | - | |
| 4437 | - | 100 | 36 | 10WF21 | - | - | - | - | - | - | 350D | 350D | - | - | |
| 4438 | 16X5-1/28X | 200 | 36 | - | 4 | 3/8 | 16 | 3/4 | - | - | 254A | 206A | - | - | |
| 4439 | - - | | 303A | 370D | - | - | | | | - | 100 36 | 14B22 | | - | - X |
| 4440 | - | 100 | 36 | 12B16.5 | - | - | - | - | - | - | 26.5K | 26.5K | - | - | |
| 4441 | - | 100 | 36 | 14B22 | - | - | - | - | - | - | 303A | 370D | - | - | |
| 4442 | - | 100 | 36 | 14B22 | - | - | - | - | - | - | 26.5K | 26.5K | - | - | |
| 4443 | - | 100 | 36 | 16B31 | - | - | - | - | - | - | 220I | 364C | - | - | |
| 4444 | - | 100 | 36 | 16B31 | - | - | - | - | - | - | 364C | 364C | - | - | |
| 4445 | - | 100 | 36 | 16B31 | - | - | - | - | - | - | 364C | 220I | - | - | |
| 4446 | - | 100 | 36 | 16B31 | - | - | - | - | - | - | 220I | 364C | - | - | |
| 4447 | - | 100 | 36 | 16B31 | - | - | - | - | - | - | 364C | 364C | - | - | |
| 4448 | - | 100 | 36 | 16B31 | - | - | - | - | - | - | 364C | 220I | - | - | |
| 4449 | - | 600 | 36 | 6BX15.4 | - | - | - | - | - | - | 451 | 385A | - | - | 1 |
| 4450 | - | 100 | 36 | 10WF21 | - | - | - | - | - | - | 350C | 503A | - | - | 2 |
| 4451 | - | 100 | 36 | 10WF25 | - | - | - | - | - | - | 350C | 350C | - | - | 5 |
| 4452 | - | 100 | 36 | 10WF21 | - | - | - | - | - | - | 350C | 350C | - | - | 3 |
| 4453 | - | 100 | 36 | 10WF21 | - | - | - | - | - | - | 370D | 350C | - | - | 4 |
| * 4454 | - | 100 | 36 | 24WF76 | - | - | - | - | - | - | 35.3K | 35.3K | - | - | |
| * 4455 | - | 100 | 36 | 24WF76 | - | - | - | - | - | - | 35.3K | 35.3K | - | - | |
| * 4456 | - | 100 | 36 | 21WF62 | - | - | - | - | - | - | 35.3K | 35.3K | - | - | |
| 4457 | - | 100 | 36 | 16B31 | - | - | - | - | - | - | 220G | 254A | - | - | |
| 4458 | - | 100 | 36 | 16B31 | - | - | - | - | - | - | 254A | 254A | - | - | |
| 4459 | - | 100 | 36 | 16B31 | - | - | - | - | - | - | 254A | 303A | - | - | |
| 4460 | - | 100 | 36 | 16B31 | - | - | - | - | - | - | 303A | 254A | - | - | |
| 4461 | - | 100 | 36 | 16B31 | - | - | - | - | - | - | 254A | 254A | - | - | |
| 4462 | - | 100 | 36 | 16B31 | - | - | - | - | - | - | 254A | 220G | - | - | |
| 4463 | - | 600 | 50 | 6BX15.4 | - | - | - | - | - | - | 385A | 451 | - | - | 1 |
| 4464 | - | 100 | 36 | 27WF84 | - | - | - | - | - | - | 378 | 814 | - | - | |
| 4465 | - | 100 | 36 | 16B31 | - | - | - | - | - | - | 254A | 303A | - | - | |
| 4466 | - | 100 | 36 | 16B31 | - | - | - | - | - | - | 303A | 254A | - | - | |

REMARKS

1 STANDARD STRUCTURAL TUBING 6X4X1/4
2 DETAIL 350E, LEFT SUPPORT, TOWER B ONLY
3 DETAIL 350D, LEFT SUPPORT AND DETAIL 350E RIGHT SUPPORT, TOWER B ONLY
4 DETAIL 350F, LEFT SUPPORT AND DETAIL 350D, RIGHT SUPPORT, TOWER B ONLY
5 DETAIL 350D, LEFT AND RIGHT SUPPORT TOWER B ONLY

* HOLD

LICENSED PROFESSIONAL ENGINEER — LESLIE E ROBERTSON — No. 34360 — UNIVERSITY OF THE STATE OF NEW YORK

5-AB1-134

**SKILLING-HELLE-CHRISTIANSEN-ROBERTSON** — **Civil & Structural Engineers**

PROJECT: THE WORLD TRADE CENTER | TITLE: BEAM SCHEDULE TOWERS A AND B | DATE: 1/22/68

REVISIONS

| BEAM NO. | SIZE | TYPE | FY | SHAPE | PLATE 1 WIDTH | PLATE 1 THICK | PLATE 2 WIDTH | PLATE 2 THICK | DIMENSIONS LENGTH | DIMENSIONS DIM. A | SUPPORTS LEFT | SUPPORTS RIGHT | STUDS NO. | STUDS SIZE | REMARKS |
|---|---|---|---|---|---|---|---|---|---|---|---|---|---|---|---|
| 4467 | - | 100 | 36 | 27WF84 | - | - | - | - | - | - | 44.2K | 44.2K | - | - | |
| 4468 | - | 100 | 36 | 21WF62 | - | - | - | - | - | - | 35.3K | 35.3K | - | - | |
| 4469 | - | 600 | 36 | 6BX15.4 | - | - | - | - | - | - | 451 | 386A | - | - | 1 |
| 4470 | - | 100 | 36 | 12B16.5 | - | - | - | - | - | - | 26.5K | 26.5K | - | - | |
| 4471 | - | 100 | 50 | 16WF36 | - | - | - | - | - | - | 106 | 106 | 47 | 3/4X3 | |
| 4472 | - | 100 | 50 | 16WF36 | - | - | - | - | - | - | 106 | 106 | 47 | 3/4X3 | X |
| 4473 | - | 100 | 36 | 12WF27 | - | - | - | - | - | - | 26.5K | 26.5K | - | - | |
| 4474 | - | 100 | 36 | 12WF27 | - | - | - | - | - | - | 26.5K | 26.5K | - | - | |
| 4475 | - | 100 | 36 | 10WF21 | - | - | - | - | - | - | 17.4K | 17.4K | - | - | |
| 4476 | - | 100 | 36 | 12WF27 | - | - | - | - | - | - | 17.4K | 283A | - | - | |
| 4477 | - | 100 | 36 | 10WF25 | - | - | - | - | - | - | 506A | 506B | 24 | 3/4X3 | |
| 4478 | - | 100 | 36 | 10WF25 | - | - | - | - | - | - | 506B | 506A | 24 | 3/4X3 | |
| 4479 | - | 100 | 36 | 10WF25 | - | - | - | - | - | - | 17.4K | 17.4K | 24 | 3/4X3 | |
| 4480 | - | 100 | 36 | 12WF27 | - | - | - | - | - | - | 283A | 17.4K | - | - | |
| 4481 | - | 100 | 36 | 30WF108 | - | - | - | - | - | - | 230 | 201 | - | - | |
| 4482 | - | 100 | 36 | 21WF62 | - | - | - | - | - | - | 201 | 105 | - | - | |
| 4483 | - | 100 | 36 | 21WF62 | - | - | - | - | - | - | 105 | 105 | - | - | |
| 4484 | - | 100 | 36 | 21WF62 | - | - | - | - | - | - | 105 | 201 | - | - | |
| 4485 | - | 100 | 36 | 30WF108 | - | - | - | - | - | - | 201 | 230 | - | - | |
| 4486 | - | 100 | 36 | 30WF108 | - | - | - | - | - | - | 230 | 201 | - | - | |
| 4487 | - | 100 | 36 | 21WF62 | - | - | - | - | - | - | 201 | 105 | - | - | |
| 4488 | - | 100 | 36 | 21WF62 | - | - | - | - | - | - | 105 | 105 | - | - | |
| 4489 | - | 100 | 36 | 21WF62 | - | - | - | - | - | - | 105 | 201 | - | - | |
| 4490 | - | 100 | 36 | 30WF108 | - | - | - | - | - | - | 201 | 230 | - | - | |
| 4491 | - | 100 | 36 | 27WF84 | - | - | - | - | - | - | 230 | 314 | - | - | |
| 4492 | - | 100 | 36 | 27WF84 | - | - | - | - | - | - | 314 | 314 | - | - | |
| 4493 | - | 100 | 36 | 30WF108 | - | - | - | - | - | - | 314 | 106 | - | - | |
| 4494 | - | 100 | 36 | 30WF108 | - | - | - | - | - | - | 269 | 216 | - | - | |
| 4495 | - | 100 | 36 | 30WF108 | - | - | - | - | - | - | 106 | 314 | - | - | |
| 4496 | - | 100 | 36 | 27WF84 | - | - | - | - | - | - | 314 | 314 | - | - | |
| 4497 | - | 100 | 36 | 27WF84 | - | - | - | - | - | - | 314 | 230 | - | - | |
| 4498 | - | 100 | 36 | 27WF84 | - | - | - | - | - | - | 230 | 314 | - | - | |
| 4499 | - | 100 | 36 | 27WF84 | - | - | - | - | - | - | 314 | 314 | - | - | |

REMARKS

1 STANDARD STRUCTURAL TUBING 6X4X1/4

LICENSED PROFESSIONAL ENGINEER LESLIE E. ROBERTSON NO. 34360 STATE OF NEW YORK

**SKILLING-HELLE-CHRISTIANSEN-ROBERTSON** — **Civil & Structural Engineers**

PROJECT: THE WORLD TRADE CENTER | TITLE: BEAM SCHEDULE TOWERS A AND B | DATE: 11/17/67

REVISIONS

| BEAM NO. | SIZE | TYPE | FY | SHAPE | PLATE 1 WIDTH | PLATE 1 THICK | PLATE 2 WIDTH | PLATE 2 THICK | DIMENSIONS LENGTH | DIMENSIONS DIM. A | SUPPORTS LEFT | SUPPORTS RIGHT | STUDS NO. | STUDS SIZE | REMARKS |
|---|---|---|---|---|---|---|---|---|---|---|---|---|---|---|---|
| 4500 | - | 100 | 36 | 30WF108 | - | - | - | - | - | - | 314 | 106 | - | - | |
| 4501 | - | 100 | 36 | 30WF108 | - | - | - | - | - | - | 289 | 216 | - | - | |
| 4502 | - | 100 | 36 | 30WF108 | - | - | - | - | - | - | 106 | 314 | - | - | |
| 4503 | - | 100 | 36 | 27WF84 | - | - | - | - | - | - | 314 | 314 | - | - | |
| 4504 | - | 100 | 36 | 27WF84 | - | - | - | - | - | - | 314 | 230 | - | - | |
| 4505 | - | 100 | 36 | 33WF118 | - | - | - | - | - | - | 230 | 201 | - | - | |
| 4506 | - | 100 | 36 | 21WF62 | - | - | - | - | - | - | 105 | 201 | - | - | |
| 4507 | - | 100 | 36 | 21WF62 | - | - | - | - | - | - | 105 | 105 | - | - | |
| 4508 | - | 100 | 36 | 21WF62 | - | - | - | - | - | - | 201 | 105 | - | - | |
| 4509 | - | 100 | 36 | 33WF118 | - | - | - | - | - | - | 201 | 230 | - | - | |
| 4510 | - | 100 | 36 | 33WF118 | - | - | - | - | - | - | 230 | 201 | - | - | |
| 4511 | - | 100 | 36 | 21WF62 | - | - | - | - | - | - | 105 | 201 | - | - | |
| 4512 | - | 100 | 36 | 21WF62 | - | - | - | - | - | - | 105 | 105 | - | - | |
| 4513 | - | 100 | 36 | 21WF62 | - | - | - | - | - | - | 201 | 105 | - | - | |
| 4514 | - | 100 | 36 | 33WF118 | - | - | - | - | - | - | 201 | 230 | - | - | |
| 4515 | - | 100 | 36 | 27WF84 | - | - | - | - | - | - | 230 | 106 | - | - | |
| 4516 | - | 100 | 36 | 27WF84 | - | - | - | - | - | - | 106 | 106 | - | - | |
| 4517 | - | 100 | 36 | 30WF108 | - | - | - | - | - | - | 295 | 44.2K | - | - | |
| 4518 | - | 100 | 36 | 30WF108 | - | - | - | - | - | - | 216 | 216 | - | - | |
| 4519 | - | 100 | 36 | 30WF108 | - | - | - | - | - | - | 269 | 295 | - | - | |
| 4520 | - | 100 | 36 | 27WF84 | - | - | - | - | - | - | 106 | 106 | - | - | |
| 4521 | - | 100 | 36 | 27WF84 | - | - | - | - | - | - | 106 | 230 | - | - | |
| 4522 | - | 100 | 36 | 27WF84 | - | - | - | - | - | - | 230 | 106 | - | - | |
| 4523 | - | 100 | 36 | 27WF84 | - | - | - | - | - | - | 295 | 292 | - | - | |
| 4524 | - | 100 | 36 | 30WF108 | - | - | - | - | - | - | 292 | 44.2K | - | - | |
| 4525 | - | 100 | 36 | 8B13 | - | - | - | - | - | - | 17.4K | 17.4K | - | - | |
| 4526 | - | 100 | 36 | 30WF108 | - | - | - | - | - | - | 269 | 216 | - | - | |
| 4527 | - | 100 | 36 | 27WF84 | - | - | - | - | - | - | 354 | 106 | - | - | |
| 4528 | - | 100 | 36 | 27WF84 | - | - | - | - | - | - | 106 | 230 | - | - | |
| 4529 | - | 600 | 36 | 6BX15.4 | - | - | - | - | - | - | 451 | 387A | - | - | 1 |
| 4530 | 16X5-1/2BX | 201 | 36 | - | 4 | 3/8 | 16 | 3/4 | - | - | 254A | 247G | - | - | |
| 4531 | - | 100 | 36 | 10WF21 | - | - | - | - | - | - | 17.4K | 17.4K | - | - | |
| 4532 | - | 100 | 36 | 10WF25 | - | - | - | - | - | - | 17.4K | 17.4K | - | - | |
| 4533 | - | 100 | 36 | 10WF21 | - | - | - | - | - | - | 511 | 201 | - | - | |

REMARKS

1 STANDARD STRUCTURAL TUBING 6X4X1/4

LICENSED PROFESSIONAL ENGINEER LESLIE E. ROBERTSON No. 34360 UNIVERSITY OF THE STATE OF NEW YORK

5-AB1-136

**SKILLING-HELLE-CHRISTIANSEN-ROBERTSON** — **Civil & Structural Engineers**

PROJECT: THE WORLD TRADE CENTER | TITLE: BEAM SCHEDULE TOWERS A AND B | DATE: 7/17/68

REVISIONS

| BEAM NO. | SIZE | TYPE | FY | SHAPE | PLATE 1 WIDTH | PLATE 1 THICK | PLATE 2 WIDTH | PLATE 2 THICK | DIMENSIONS LENGTH | DIMENSIONS DIM. A | SUPPORTS LEFT | SUPPORTS RIGHT | STUDS NO. | STUDS SIZE | REMARKS |
|---|---|---|---|---|---|---|---|---|---|---|---|---|---|---|---|
| 4534 | - | 100 | 36 | 10WF25 | - | - | - | - | - | - | 26.5K | 26.5K | - | - | |
| 4535 | - | 100 | 36 | 10WF25 | - | - | - | - | - | - | 102 | 505 | - | - | |
| 4536 | - | 100 | 36 | 10WF25 | - | - | - | - | - | - | 505 | 505 | - | - | |
| 4537 | - | 100 | 36 | 12WF31 | - | - | - | - | - | - | 102 | 102 | - | - | |
| 4538 | - | 100 | 36 | 10WF21 | - | - | - | - | - | - | 101 | 101 | - | - | |
| 4539 | - | 100 | 36 | 33WF118 | - | - | - | - | - | - | 230 | 201 | - | - | X |
| 4540 | - | 100 | 36 | 21WF55 | - | - | - | - | - | - | 201 | 201 | - | - | |
| 4541 | - | 100 | 36 | 21WF55 | - | - | - | - | - | - | 201 | 201 | - | - | |
| 4542 | - | 100 | 36 | 21WF55 | - | - | - | - | - | - | 201 | 105 | - | - | |
| 4543 | - | 100 | 36 | 33WF118 | - | - | - | - | - | - | 201 | 230 | - | - | |
| 4544 | - | 100 | 36 | 33WF118 | - | - | - | - | - | - | 230 | 201 | - | - | |
| 4545 | - | 100 | 36 | 21WF55 | - | - | - | - | - | - | 201 | 201 | - | - | |
| 4546 | - | 100 | 36 | 21WF55 | - | - | - | - | - | - | 201 | 201 | - | - | |
| 4547 | - | 100 | 36 | 21WF55 | - | - | - | - | - | - | 201 | 201 | - | - | |
| 4548 | - | 100 | 36 | 33WF118 | - | - | - | - | - | - | 201 | 230 | - | - | |
| 4549 | - | 100 | 36 | 24WF76 | - | - | - | - | - | - | 230 | 106 | - | - | |
| 4550 | - | 100 | 36 | 24WF76 | - | - | - | - | - | - | 106 | 106 | - | - | |
| 4551 | - | 100 | 36 | 24WF76 | - | - | - | - | - | - | 295 | 204 | - | - | 1 |
| 4552 | - | 100 | 36 | 24WF76 | - | - | - | - | - | - | 204 | 295 | - | - | 2 |
| 4553 | - | 100 | 36 | 24WF76 | - | - | - | - | - | - | 106 | 106 | - | - | |
| 4554 | - | 100 | 36 | 24WF76 | - | - | - | - | - | - | 106 | 230 | - | - | |
| 4555 | - | 100 | 36 | 24WF76 | - | - | - | - | - | - | 230 | 106 | - | - | |
| 4556 | - | 100 | 36 | 24WF76 | - | - | - | - | - | - | 295 | 416 | - | - | |
| 4557 | - | 100 | 36 | 24WF76 | - | - | - | - | - | - | 204 | 204 | - | - | 1 |
| 4558 | - | 100 | 36 | 24WF76 | - | - | - | - | - | - | 204 | 295 | - | - | 2 |
| 4559 | - | 100 | 36 | 24WF76 | - | - | - | - | - | - | 106 | 106 | - | - | |
| 4560 | - | 100 | 36 | 24WF76 | - | - | - | - | - | - | 106 | 230 | - | - | |
| 4561 | - | 100 | 36 | 12CH20.7 | - | - | - | - | - | - | 26.5K | 26.5K | - | - | |
| 4562 | - | 100 | 36 | 12B16.5 | - | - | - | - | - | - | 26.5K | 26.5K | - | - | |
| 4563 | - | 100 | 36 | 16B26 | - | - | - | - | - | - | 26.5K | 26.5K | - | - | |
| 4564 | - | 100 | 36 | 14B22 | - | - | - | - | - | - | 26.5K | 26.5K | - | - | |
| 4565 | - | 100 | 36 | 16B31 | - | - | - | - | - | - | 26.5K | 26.5K | - | - | |
| 4566 | - | 100 | 36 | 10WF21 | - | - | - | - | - | - | 17.4K | 350C | - | - | 3 |

REMARKS

1 DETAIL 416 RIGHT END OF BEAM
2 DETAIL 416 LEFT END OF BEAM
3 DETAIL 350D, RIGHT SUPPORT, TOWER B ONLY

LICENSED PROFESSIONAL ENGINEER — LESLIE E. ROBERTSON — No. 34360 — UNIVERSITY OF THE STATE OF NEW YORK

5-AB1-137

**SKILLING-HELLE-CHRISTIANSEN-ROBERTSON** — **Civil & Structural Engineers**

PROJECT: THE WORLD TRADE CENTER | TITLE: BEAM SCHEDULE TOWERS A AND B | DATE: 1/24/68

REVISIONS

| BEAM NO. | SIZE | TYPE | FY | SHAPE | PLATE 1 WIDTH | PLATE 1 THICK | PLATE 2 WIDTH | PLATE 2 THICK | DIMENSIONS LENGTH | DIMENSIONS DIM. A | SUPPORTS LEFT | SUPPORTS RIGHT | STUDS NO. | STUDS SIZE | REMARKS |
|---|---|---|---|---|---|---|---|---|---|---|---|---|---|---|---|
| 4567 | - | 100 | 36 | 14B22 | - | - | - | - | - | - | 26.5K | 235A | - | - | |
| 4568 | - | 100 | 36 | 12B16.5 | - | - | - | - | - | - | 111H | 26.5K | - | - | |
| 4569 | - | 100 | 36 | 16B31 | - | - | - | - | - | - | 460G | 460A | - | - | |
| 4570 | - | 100 | 36 | 12B16.5 | - | - | - | - | - | - | 26.5K | 26.5K | - | - | |
| 4571 | - | 100 | 36 | 10WF25 | - | - | - | - | - | - | 505B | 17.4K | - | - | |
| 4572 | - | 100 | 36 | 16WF36 | - | - | - | - | - | - | 395B | 306C | 10 | 3/4X3 | X |
| 4573 | - | 100 | 36 | 16WF40 | - | - | - | - | - | - | 208H | 287G | 39 | 3/4X3D | |
| 4574 | - | 100 | 36 | 14B22 | - | - | - | - | - | - | 26.5K | 26.5K | - | - | |
| 4575 | 16X5-1/2BX | 202 | 36 | - | 4 | 3/8 | 16 | 3/4 | - | - | 254B | 247A | - | - | |
| 4576 | 16X5-1/2BX | 202 | 36 | - | 4 | 3/8 | 16 | 3/4 | - | - | 450 | 450 | - | - | |
| 4577 | - | 100 | 36 | 10WF21 | - | - | - | - | - | - | 17.7K | 17.7K | - | - | |
| 4578 | 16X4 [illegible] | 202 | 36 | - | 3-1/2 | 3/8 | 16 | 3/4 | - | - | 372A | 242A | - | - | |
| 4579 | - | 100 | 36 | 12B14.5 | - | - | - | - | - | - | 17.4K | 504 | - | - | |
| 4580 | - | 100 | 36 | 12B14.5 | - | - | - | - | - | - | 504 | 365 | - | - | |
| 4581 | - | 100 | 36 | 16B31 | - | - | - | - | - | - | 220L | 294D | - | - | |
| 4582 | - | 100 | 36 | 16B31 | - | - | - | - | - | - | 294D | 294D | - | - | |
| 4583 | - | 100 | 36 | 16B31 | - | - | - | - | - | - | 294D | 463C | - | - | |
| 4584 | - | 100 | 36 | 16B31 | - | - | - | - | - | - | 463C | 294D | - | - | |
| 4585 | - | 100 | 36 | 16B31 | - | - | - | - | - | - | 294D | 294D | - | - | |
| 4586 | - | 100 | 36 | 16B31 | - | - | - | - | - | - | 294D | 220L | - | - | |
| 4587 | - | 100 | 36 | 16B31 | - | - | - | - | - | - | 463C | 463C | - | - | |
| 4588 | - | 100 | 36 | 16B31 | - | - | - | - | - | - | 26.5K | 26.5K | - | - | |
| 4589 | - | 100 | 36 | 16WF58 | - | - | - | - | - | - | 26.5K | 26.5K | - | - | |
| 4590 | - | 100 | 36 | 16WF58 | - | - | - | - | - | - | 26.5K | 26.5K | - | - | |
| 4591 | - | 100 | 36 | 16B31 | - | - | - | - | - | - | 463C | 463C | - | - | |
| 4592 | - | 100 | 36 | 16B31 | - | - | - | - | - | - | 26.5K | 26.5K | - | - | |
| 4593 | - | 100 | 36 | 16B31 | - | - | - | - | - | - | 463C | 463C | - | - | |
| 4594 | - | 100 | 36 | 16B31 | - | - | - | - | - | - | 26.5K | 26.5K | - | - | |
| 4595 | - | 100 | 36 | 16B31 | - | - | - | - | - | - | 463C | 463C | - | - | |
| 4596 | - | 100 | 36 | 16B31 | - | - | - | - | - | - | 463C | 463C | - | - | |
| 4597 | - | 100 | 36 | 16WF36 | - | - | - | - | - | - | 419B | 173A | - | - | |
| 4598 | - | 100 | 36 | 16B31 | - | - | | | - | - | 26.5K | 26.5K | - | - | |
| 4599 | - | 100 | 36 | 16B31 | - | - | - | - | - | - | 466 | 466 | - | - | |

LICENSED PROFESSIONAL ENGINEER LESLIE E. ROBERTSON No. 34360 STATE OF NEW YORK

S-A51-138

**SKILLING-HELLE-CHRISTIANSEN-ROBERTSON** — **Civil & Structural Engineers**

| PROJECT | TITLE | DATE |
|---|---|---|
| THE WORLD TRADE CENTER | BEAM SCHEDULE TOWERS A AND B | 1/24/68 |

REVISIONS

| BEAM NO. | SIZE | TYPE | FY | SHAPE | PLATE 1 WIDTH | PLATE 1 THICK | PLATE 2 WIDTH | PLATE 2 THICK | DIMENSIONS LENGTH | DIMENSIONS DIM. A | SUPPORTS LEFT | SUPPORTS RIGHT | STUDS NO. | STUDS SIZE | REMARKS |
|---|---|---|---|---|---|---|---|---|---|---|---|---|---|---|---|
| 4600 | - | 100 | 36 | 16B31 | - | - | - | - | - | - | 26.5K | 26.5K | - | - | |
| 4601 | - | 100 | 36 | 16B31 | - | - | - | - | - | - | 26.5K | 26.5K | - | - | |
| 4602 | | 100 | 36 | 12B19 | - | - | - | - | - | - | 26.5K | 508 | - | - | |
| 4603 | - | 100 | 36 | 8B13 | - | - | - | - | - | - | 178 | 178 | - | - | |
| 4604 | - | 100 | 36 | 8B13 | - | - | - | - | - | - | 178 | 178 | - | - | |
| 4605 | - | 100 | 36 | 8B13 | - | - | - | - | - | - | 178 | 178 | - | - | 1 |
| 4606 | - | 100 | 36 | 8B13 | - | - | - | - | - | - | 178 | 178 | - | - | |
| 4607 | - | 100 | 36 | 8B13 | - | - | - | - | - | - | 178 | 178 | - | - | |
| 4608 | - | 100 | 36 | 8CH11.5 | - | - | - | - | - | - | 17.4K | 17.4K | - | - | |
| 4609 | - | 100 | 36 | 8B13 | - | - | - | - | - | - | 17.4K | 17.4K | - | - | |
| 4610 | - | 100 | 36 | 12B16.5 | - | - | - | - | - | - | 26.5K | 178 | - | - | 1 |
| 4611 | - | 100 | 36 | 12B16.5 | - | - | - | - | - | - | 178 | 178 | - | - | 1 |
| 4612 | - | 100 | 36 | 8B13 | - | - | - | - | - | - | 178 | 178 | - | - | |
| 4613 | - | 100 | 36 | 8B13 | - | - | - | - | - | - | 178 | 178 | - | - | |
| 4614 | - | 100 | 36 | 8B13 | - | - | - | - | - | - | 178 | 178 | - | - | |
| 4615 | - | 100 | 36 | 8B13 | - | - | - | - | - | - | 178 | 178 | - | - | |
| 4616 | - | 100 | 36 | 12B16.5 | - | - | - | - | - | - | 178 | 26.5K | - | - | 1 |
| 4617 | - | 100 | 36 | 8B13 | - | - | - | - | - | - | 178 | 178 | - | - | |
| 4618 | - | 100 | 36 | 8B13 | - | - | - | - | - | - | 178 | 178 | - | - | |
| 4619 | - | 100 | 36 | 10B15 | - | - | - | - | - | - | 178 | 178 | - | - | 1 |
| 4620 | - | 100 | 36 | 8B13 | - | - | - | - | - | - | 178 | 178 | - | - | |
| 4621 | - | 100 | 36 | 8B13 | - | - | - | - | - | - | 178 | 178 | - | - | |
| 4622 | - | 100 | 36 | 12B16.5 | - | - | - | - | - | - | 314 | 105 | - | - | |
| 4623 | - | 100 | 36 | 12B16.5 | - | - | - | - | - | - | 105 | 105 | - | - | |
| 4624 | - | 100 | 36 | 10B15 | - | - | - | - | - | - | 105 | 105 | - | - | |
| 4625 | - | 100 | 36 | 12B16.5 | - | - | - | - | - | - | 201 | 105 | - | - | |
| 4626 | - | 100 | 36 | 12B16.5 | - | - | - | - | - | - | 105 | 314 | - | - | |
| 4627 | - | 100 | 36 | 12B16.5 | - | - | - | - | - | - | 314 | 105 | - | - | |
| 4628 | - | 100 | 36 | 12B16.5 | - | - | - | - | - | - | 105 | 105 | - | - | |
| 4629 | - | 100 | 36 | 10B15 | - | - | - | - | - | - | 105 | 105 | - | - | |
| 4630 | - | 100 | 36 | 12B16.5 | - | - | - | - | - | - | 105 | 105 | - | - | |
| 4631 | - | 100 | 36 | 12B16.5 | - | - | - | - | - | - | 105 | 314 | - | - | |
| 4632 | 16X5-1/2BX | 200 | 36 | - | 4 | 3/8 | 16 | 3/4 | - | - | 2650 | 206A | - | - | |
| 4633 | - | 100 | 36 | 8B13 | - | - | - | - | - | - | 178 | 292 | - | - | |

REMARKS

1 DETAIL 204 INTERMEDIATE SUPPORT OF BEAM

LICENSED PROFESSIONAL ENGINEER — LESLIE E. ROBERTSON — No. 34360 — UNIVERSITY OF THE STATE OF NEW YORK

5-A61-139

[illegible]

| [illegible] | THE [illegible] TRADE CENTER | TITLE | BEAM SCHEDULE TOWERS A AND B | DATE | [illegible] |
|---|---|---|---|---|---|

| BEAM NO. | SIZE | TYPE | FY | SHAPE | PLATE 1 WIDTH | PLATE 1 THICK | PLATE 2 WIDTH | PLATE 2 THICK | DIMENSIONS LENGTH | DIMENSIONS DIM. A | SUPPORTS LEFT | SUPPORTS RIGHT | STUDS NO. | STUDS SIZE | REMARKS |
|---|---|---|---|---|---|---|---|---|---|---|---|---|---|---|---|
| 4634 | - | 100 | 36 | 14B22 | - | - | - | - | - | - | 292 | 292 | - | - | |
| 4635 | - | 100 | 36 | 12B16.5 | - | - | - | - | - | - | 292 | 17.4K | - | - | 1 |
| 4636 | - | 100 | 36 | 10WF21 | - | - | - | - | - | - | 17.4K | 17.4K | - | - | |
| 4637 | - | 100 | 36 | 10WF21 | - | - | - | - | - | - | 509A | 17.7K | - | - | |
| 4638 | - | 100 | 36 | 12B16.5 | - | - | - | - | - | - | 26.5K | 26.5K | - | - | |
| 4639 | - | 100 | 36 | 12B16.5 | - | - | - | - | - | - | 26.5K | 26.5K | - | - | |
| [illegible] | - | 100 | 50 | 12B19 | - | - | - | - | - | - | 26.5K | 26.5K | [illegible] | 5/8X2 | |
| [illegible] | - | 100 | 36 | [illegible] | - | - | - | - | - | - | [illegible] | [illegible] | [illegible] | [illegible] | |
| [illegible] | - | 100 | 50 | 14B22 | - | - | - | - | - | - | [illegible] | [illegible] | [illegible] | [illegible] | |
| [illegible] | - | 100 | 36 | 12B16.5 | - | - | - | - | - | - | 26.5K | 26.5K | - | - | |
| 4644 | - | 100 | 36 | 8B13 | - | - | - | - | - | - | 17.4K | 17.4K | - | - | |
| 4645 | - | 100 | 36 | 14B22 | - | - | - | - | - | - | 105L | 105L | 11 | 3/4X3 | |
| 4646 | 15X3-3/8CH | 505 | 36 | 15CH50 | 2-5/8 | 9/16 | - | - | - | - | 315 | 233 | - | - | |
| 4647 | - | 100 | 36 | 12WF27 | - | - | - | - | - | - | 201H | 201E | - | - | |
| 4648 | - | 100 | 36 | 16WF36 | - | - | - | - | - | - | 178A | 508 | - | - | 2 |
| 4649 | - | 100 | 36 | 12B16.5 | - | - | - | - | - | - | 26.5K | 26.5K | - | - | |
| 4650 | - | 100 | 36 | 12B16.5 | - | - | - | - | - | - | 26.5K | 26.5K | - | - | |
| 4651 | - | 100 | 36 | 8B13 | - | - | - | - | - | - | 17.4K | 17.4K | - | - | |
| 4652 | - | 100 | 36 | 8B13 | - | - | - | - | - | - | 17.4K | 17.4K | - | - | |
| 4653 | - | 100 | 36 | 16B26 | - | - | - | - | - | - | 26.5K | 510B | - | - | |
| 4654 | - | 100 | 36 | 14WF34 | - | - | - | - | - | - | 26.5K | 510B | - | - | |
| 4655 | - | 100 | 36 | 14WF43 | - | - | - | - | - | - | 111A | 510B | - | - | |
| [illegible] | - | 100 | 36 | [illegible] | - | - | - | - | - | - | 26.5K | 510B | - | - | |
| [illegible] | - | 100 | 36 | [illegible] | - | - | - | - | - | - | [illegible] | [illegible] | - | - | |
| [illegible] | - | 100 | 36 | [illegible] | - | - | - | - | - | - | [illegible] | [illegible] | - | - | |
| [illegible] | - | 100 | 36 | 16WF36 | - | - | - | - | - | - | 206R | 111R | - | - | |
| [illegible] | - | 100 | 36 | 16WF36 | - | - | - | - | - | - | 220I | 220I | - | - | |
| [illegible] | - | 100 | 36 | 8B13 | - | - | - | - | - | - | 17.4K | 466B | - | - | |
| 4662 | - | 100 | 36 | 12B16.5 | - | - | - | - | - | - | 172B | 172B | - | - | |
| 4663 | - | 100 | 36 | 12B16.5 | - | - | - | - | - | - | 503 | 503 | - | - | |
| [illegible] | - | 100 | 36 | 12B16.5 | - | - | - | - | - | - | 172B | 350B | - | - | |
| [illegible] | - | 100 | 36 | 12B16.5 | - | - | - | - | - | - | 350B | 508 | - | - | |
| [illegible] | - | 100 | 36 | 12B19 | - | - | - | - | - | - | 26.5K | 26.5K | - | - | |

REMARKS

[illegible]

* HOLD

**SKILLING, HELLE, CHRISTIANSEN, ROBERTSON** — **Structural & Civil Engineers**

PROJECT: THE WORLD TRADE CENTER | TITLE: BEAM SCHEDULE TOWERS A AND B | DATE: 12/ 6/68

REVISIONS

| BEAM NO. | SIZE | TYPE | FY | SHAPE | PLATE 1 WIDTH | PLATE 1 THICK | PLATE 2 WIDTH | PLATE 2 THICK | DIMENSIONS LENGTH | DIMENSIONS DIM. A | SUPPORTS LEFT | SUPPORTS RIGHT | STUDS NO. | STUDS SIZE | REMARKS |
|---|---|---|---|---|---|---|---|---|---|---|---|---|---|---|---|
| 4667 | - | 10C | 36 | 12B19 | - | - | - | - | - | - | 220G | 503A | - | - | 3 |
| 4668 | - | 10C | 36 | 12B19 | - | - | - | - | - | - | 503A | 503A | - | - | 3,4 |
| 4669 | - | 10C | 36 | 12B19 | - | - | - | - | - | - | 503A | 370D | - | - | |
| 4670 | - | 10C | 36 | 12B19 | - | - | - | - | - | - | 503A | 503A | - | - | |
| 4671 | - | 10C | 36 | 8B13 | - | - | - | - | - | - | 17.4K | 17.4K | - | - | |
| 4672 | - | 10C | 36 | 12B19 | - | - | - | - | - | - | 26.5K | 26.5K | - | - | |
| 4673 | - | 10C | 36 | 16B31 | - | - | - | - | - | - | 205I | 265B | - | - | 5 |
| 4674 | - | 60C | 36 | 6BX15.4 | - | - | - | - | - | - | 451 | 384B | - | - | 1 |
| 4675 | 15X3-3/8CH | 50S | 36 | 15CH33.9 | 2-3/8 | 3/8 | - | - | - | - | 351 | 233 | - | - | |
| 4676 | 15X3-3/8CH | 50S | 36 | 15CH33.9 | 2-3/8 | 1/4 | - | - | - | - | 233 | 315 | - | - | |
| 4677 | 15X3-3/8CH | 50S | 36 | 15CH33.9 | 2-3/8 | 1/2 | - | - | - | - | 215 | 233 | - | - | |
| 4678 | 15X3-3/8CH | 50S | 36 | 15CH33.9 | 2-3/8 | 1/2 | - | - | - | - | 315 | 233 | - | - | |
| 4679 | - | 10C | 36 | 8B13 | - | - | - | - | - | - | 504A | 365A | - | - | |
| 4680 | - | 10C | 36 | 8CH11.5 | - | - | - | - | - | - | 17.4K | 17.4K | - | - | |
| 4681 | 15X3-3/8CH | 10C | 50 | 15CH50 | - | - | - | - | - | - | 315 | 233 | - | - | |
| 4682 | - | 10C | 50 | 18WF64 | - | - | - | - | - | - | 362A | 456B | 15 | 3/4X3 | |
| 4683 | - | 10C | 36 | 16B26 | - | - | - | - | - | - | 335J | 301C | 15 | 3/4X3 | |
| 4684 | - | 10C | 36 | 14B22 | - | - | - | - | - | - | 301C | 26.5K | 12 | 3/4X3C | |
| 4685 | - | 10C | 50 | 10WF39 | - | - | - | - | - | - | 283R | 358A | - | - | |
| 4686 | - | 10C | 36 | 10WF25 | - | - | - | - | - | - | 17.4K | 505B | - | - | |
| 4687 | - | 10C | 36 | 14B22 | - | - | - | - | - | - | 105L | 26.5K | - | - | |
| 4688 | - | 10C | 36 | 8B13 | - | - | - | - | - | - | 283J | 365A | - | - | |
| 4689 | - | 60C | 36 | 6BX15.4 | - | - | - | - | - | - | 384B | 499 | - | - | 1 |
| 4690 | - | 10C | 36 | 12B16.5 | - | - | - | - | - | - | 26.5K | 26.5K | - | - | |
| 4691 | - | 10C | 36 | 10WF21 | - | - | - | - | | | 103A | 17.4K | - | - | |
| 4692 | - | 10C | 36 | 16WF40 | - | - | - | - | - | - | 28.0K | 26.5K | - | - | |
| 4693 | - | 10C | 36 | 12B16.5 | - | - | - | - | - | - | 26.5K | 26.5K | 16 | 3/4X3 | |
| 4694 | - | 10C | 36 | 10WF21 | - | - | - | - | | | 17.4K | 111H | - | - | |
| 4695 | - | 10C | 36 | 12B16.5 | - | - | - | - | - | - | 26.5K | 26.5K | - | - | |
| 4696 | - | 10C | 36 | 8B13 | - | - | - | - | - | - | 17.4K | 17.4K | - | - | |
| 4697 | - | 10C | 36 | 8B13 | - | - | - | - | - | - | 17.4K | 17.4K | - | - | |
| 4698 | - | 10C | 36 | 8B13 | - | - | - | - | - | - | 17.4K | 507 | - | - | |
| 4699 | - | 60C | 36 | 6BX15.4 | - | - | - | - | - | - | 518 | 519 | - | - | 1,2 |

REMARKS

1 STANDARD STRUCTURAL TUBING 6X4X1/4
2 DETAIL 389 INTERMEDIATE SUPPORT OF BEAM
3 RIGHT END OF BEAM SITS ON POST
4 LEFT END OF BEAM SITS ON POST
5 LEFT END EXTENDS 1FT 4 PAST COL. CENTERLINE

LICENSED PROFESSIONAL ENGINEER — LESLIE E. ROBERTSON — No. 34360 — UNIVERSITY OF THE STATE OF NEW YORK

**SKILLING-HELLE-CHRISTIANSEN-ROBERTSON** — **Civil & Structural Engineers**

| PROJECT | TITLE | DATE |
|---|---|---|
| THE WORLD TRADE CENTER | BEAM SCHEDULE TOWERS A AND B | 1/24/58 |

REVISIONS

| BEAM NO. | SIZE | TYPE | FY | SHAPE | PLATE 1 WIDTH | PLATE 1 THICK | PLATE 2 WIDTH | PLATE 2 THICK | DIMENSIONS LENGTH | DIMENSIONS DIM. A | SUPPORTS LEFT | SUPPORTS RIGHT | STUDS NO. | STUDS SIZE | REMARKS |
|---|---|---|---|---|---|---|---|---|---|---|---|---|---|---|---|
| 4700 | - | 100 | 36 | 10WF25 | - | - | - | - | - | - | 505A | 505A | - | - | |
| 4701 | - | 100 | 50 | 12B16.5 | - | - | - | - | - | - | 303B | 26.5K | 10 | 3/4X3B | |
| 4702 | - | 100 | 36 | 12B16.5 | - | - | - | - | - | - | 26.5K | 26.5K | 16 | 3/4X3 | 3 |
| 4703 | - | 100 | 36 | 8B13 | - | - | - | - | - | - | 17.4K | 17.4K | - | - | |
| 4704 | - | 100 | 36 | 10WF21 | - | - | - | - | - | - | 17.7K | 17.7K | - | - | |
| 4705 | - | 100 | 36 | 10WF21 | - | - | - | - | - | - | 17.7K | 17.7K | 19 | 3/4X3 | X |
| 4706 | - | 100 | 36 | 10WF21 | - | - | - | - | - | - | 17.7K | 17.7K | - | - | |
| 4707 | - | 100 | 36 | 16B31 | - | - | - | - | - | - | 26.5K | 26.5K | - | - | |
| 4708 | - | 100 | 36 | 16B26 | - | - | - | - | - | - | 26.5K | 475A | - | - | |
| 4709 | - | 100 | 36 | 10WF21 | - | - | - | - | - | - | 17.4K | 17.4K | - | - | |
| 4710 | - | 100 | 36 | 16B31 | - | - | - | - | - | - | 453 | 26.5K | - | - | |
| 4711 | - | 100 | 36 | 16B31 | - | - | - | - | - | - | 26.5K | 26.5K | - | - | |
| 4712 | - | 100 | 36 | 16WF45 | - | - | - | - | - | - | 220L | 205F | - | - | |
| 4713 | - | 100 | 36 | 16WF45 | - | - | - | - | - | - | 401A | 401A | - | - | |
| 4714 | - | 100 | 36 | 16WF45 | - | - | - | - | - | - | 205F | 335C | - | - | 1 |
| 4715 | - | 100 | 36 | 16WF45 | - | - | - | - | - | - | 335C | 307D | - | - | 2 |
| 4716 | - | 100 | 36 | 16WF45 | - | - | - | - | - | - | 401A | 401A | - | - | |
| 4717 | - | 100 | 36 | 16WF45 | - | - | - | - | - | - | 205F | 220M | - | - | |
| 4718 | - | 404 | 50 | 16WF50 | - | - | - | - | - | - | 338D | 274B | 26 | 3/4X3 | |
| 4719 | - | 404 | 50 | 16WF50 | - | - | - | - | - | - | 274B | 282A | 26 | 3/4X3 | |
| 4720 | - | 100 | 36 | 14B22 | - | - | - | - | - | - | 26.5K | 26.5K | 30 | 5/8X2 | |
| 4721 | - | 100 | 50 | 16WF50 | - | - | - | - | - | - | 220I | 292A | 40 | 3/4X3 | |
| 4722 | - | 100 | 36 | 16WF40 | - | - | - | - | - | - | 335 | 307 | - | - | |
| 4723 | - | 100 | 50 | 16WF50 | - | - | - | - | - | - | 292A | 287G | 40 | 3/4X3J | |
| 4724 | - | 100 | 50 | 16WF45 | - | - | - | - | - | - | 106F | 111I | 39 | 3/4X3 | |
| 4725 | - | 100 | 50 | 16WF45 | - | - | - | - | - | - | 106E | 106D | 40 | 3/4X3 | |
| 4726 | - | 100 | 50 | 16B31 | - | - | - | - | - | - | 106K | 106L | 34 | 3/4X3 | |
| 4727 | - | 100 | 36 | 12WF27 | - | - | - | - | - | - | 26.5K | 26.5K | - | - | |
| 4728 | - | 100 | 50 | 16WF45 | - | - | - | - | - | - | 276A | 26.5K | 39 | 3/4X3 | |
| 4729 | - | 100 | 36 | 12B22 | - | - | - | - | - | - | 26.5K | 26.5K | - | - | |
| 4730 | - | 100 | 36 | 12B22 | - | - | - | - | - | - | 26.5K | 26.5K | - | - | |
| 4731 | - | 100 | 36 | 16WF45 | - | - | - | - | - | - | 106D | 111L | 30 | 3/4X3 | |
| 4732 | - | 100 | 36 | 14WF38 | - | - | - | - | - | - | 106D | 106D | 34 | 3/4X3 | |
| 4733 | - | 100 | 36 | 16WF36 | - | - | - | - | - | - | 106 | 106 | - | - | |

REMARKS

1 DETAIL 405 RIGHT END OF BEAM
2 DETAIL 405 LEFT END OF BEAM
3 SEE 6-AB2-36 FOR TROLLEY BEAM SUPPORT

* HOLD

LICENSED PROFESSIONAL ENGINEER LESLIE E. ROBERTSON No. 34360 UNIVERSITY OF THE STATE OF N.Y.

**SKILLING-HELLE-CHRISTIANSEN-ROBERTSON** — Civil & Structural Engineers

PROJECT: THE WORLD TRADE CENTER | TITLE: BEAM SCHEDULE TOWERS A AND B | DATE: 2/29/68

REVISIONS

| BEAM NO. | SIZE | TYPE | FY | SHAPE | PLATE 1 WIDTH | PLATE 1 THICK | PLATE 2 WIDTH | PLATE 2 THICK | DIMENSIONS LENGTH | DIMENSIONS DIM. A | SUPPORTS LEFT | SUPPORTS RIGHT | STUDS NO. | STUDS SIZE | REMARKS |
|---|---|---|---|---|---|---|---|---|---|---|---|---|---|---|---|
| 4734 | - | 100 | 36 | 16WF36 | - | - | - | - | - | - | 395C | 306C | 8 | 3/4X3 | |
| 4735 | - | 100 | 50 | 15CH40.0 | - | - | - | - | - | - | 315A | 232C | - | - | |
| 4736 | - | 100 | 36 | 12WF27 | - | - | - | - | - | - | 103A | 102A | - | - | |
| 4737 | - | 100 | 36 | 10WF21 | - | - | - | - | - | - | 17.4K | 103A | - | - | |
| 4738 | - | 100 | 36 | 12B19 | - | - | - | - | - | - | 105H | 105H | 8 | 3/4X3 | |
| 4739 | - | 100 | 36 | 12B22 | - | - | - | - | - | - | 105L | 26.5K | 15 | 3/4X4 | 1/2C |
| 4740 | - | 100 | 36 | 18CH40 | - | - | - | - | - | - | 407 | 407 | - | - | |
| 4741 | - | 100 | 36 | 10CH25 | - | - | - | - | - | - | 249 | 249 | - | - | |
| 4742 | 30X7 BU | 300 | 36 | - | 7 | 2 | 26 | 3/4 | - | - | 334D | 267A | - | - | |
| 4743 | - | 100 | 36 | 16B31 | - | - | - | - | - | - | 364F | 220I | - | - | |
| 4744 | 16X5-1/28X | 204 | 36 | - | 4 | 3/8 | 16 | 3/4 | - | - | 450 | 483 | - | - | |
| 4745 | - | 100 | 36 | 16WF36 | - | - | - | - | - | - | 170B | 287G | 15 | 3/4X3B | |
| 4746 | - | 100 | 36 | 16WF45 | - | - | - | - | - | - | 303B | 395B | 8 | 3/4X3B | |
| 4747 | - | 100 | 36 | 14B22 | - | - | - | - | - | - | 301C | 26.5K | 24 | 3/4X3 | |
| 4748 | - | 100 | 36 | 16WF36 | - | - | - | - | - | - | 111 | 106 | - | - | |
| 4749 | - | 100 | 36 | 12WF45 | - | - | - | - | - | - | 26.5K | 368B | 10 | 3/4X4-1/2B | |
| 4750 | - | 100 | 36 | 14B26 | - | - | - | - | - | - | 26.5K | 294D | 10 | 3/4X3 | |
| 4751 | - | 100 | 36 | 8B13 | - | - | - | - | - | - | 17.4K | 17.4K | - | - | |
| 4752 | - | 100 | 36 | 14B26 | - | - | - | - | - | - | 201F | 26.5K | 23 | 3/4X3 | |
| 4753 | - | 100 | 36 | 14B26 | - | - | - | - | - | - | 26.5K | 26.5K | 10 | 3/4X3B | |
| 4754 | - | 100 | 36 | 14WF34 | - | - | - | - | - | - | 106D | 106D | 39 | 3/4X3 | |
| 4755 | - | 100 | 36 | 14WF34 | - | - | - | - | - | - | 106D | 106D | 39 | 3/4X3 | |
| 4756 | - | 100 | 36 | 8B13 | - | - | - | - | - | - | 17.4K | 17.4K | - | - | |
| 4757 | - | 100 | 36 | 8B13 | - | - | - | - | - | - | 17.4K | 17.4K | - | - | |
| 4758 | - | 100 | 36 | 8B13 | - | - | - | - | - | - | 17.4K | 17.4K | - | - | |
| 4759 | - | 100 | 36 | 14B22 | - | - | - | - | - | - | 26.5K | 26.5K | - | - | |
| 4760 | - | 100 | 36 | 12B16.5 | - | - | - | - | - | - | 17.4K | 17.4K | 10 | 3/4X3 | |
| 4761 | - | 100 | 36 | 12WF27 | - | - | - | - | - | - | 283G | 105L | 16 | 3/4X4-1/2 | |
| 4762 | - | 100 | 36 | 12WF27 | - | - | - | - | - | - | 26.5K | 26.5K | 16 | 3/4X4 1/2 | |
| 4763 | - | 100 | 36 | 16WF45 | - | - | - | - | - | - | 106D | 111L | 39 | 3/4X3 | |
| 4764 | 16X5-1/28X | 201 | 36 | - | 4 | 3/8 | 16 | 3/4 | - | - | 483 | 450 | - | - | |
| 4765 | - | 100 | 50 | 14B22 | - | - | - | - | - | - | 235C | 219B | 34 | 3/4X3 | |

LICENSED PROFESSIONAL ENGINEER — LESLIE E. ROBERTSON — No. 34360 — UNIVERSITY OF THE STATE OF NEW YORK

**SKILLING-HELLE-CHRISTIANSEN-ROBERTSON** — Civil & Structural Engineers

PROJECT: THE WORLD TRADE CENTER | TITLE: BEAM SCHEDULE TOWERS A AND B | DATE: 9/25/68

REVISIONS

| BEAM NO. | SIZE | TYPE | FY | SHAPE | PLATE 1 WIDTH | PLATE 1 THICK | PLATE 2 WIDTH | PLATE 2 THICK | DIMENSIONS LENGTH | DIMENSIONS DIM. A | SUPPORTS LEFT | SUPPORTS RIGHT | STUDS NO. | STUDS SIZE | REMARKS |
|---|---|---|---|---|---|---|---|---|---|---|---|---|---|---|---|
| 4767 | - | 100 | 36 | 8B13 | - | - | - | - | - | - | 17.4K | 17.4K | - | - | |
| 4768 | - | 100 | 36 | 16WF36 | - | - | - | - | - | - | 314 | 354 | - | - | |
| 4769 | - | 100 | 36 | 12B16.5 | - | - | - | - | - | - | 26.5K | 297 | - | - | |
| 4770 | - | 100 | 36 | 16WF45 | - | - | - | - | - | - | 26.5K | 26.5K | - | - | |
| 4771 | - | 100 | 36 | 14B22 | - | - | - | - | - | - | 26.5K | 26.5K | 24 | 3/4X3 | |
| 4772 | - | 100 | 36 | 14B22 | - | - | - | - | - | - | 26.5K | 26.5K | 24 | 3/4X3 | X |
| 4773 | - | 100 | 36 | 12B16.5 | - | - | - | - | - | - | 26.5K | 26.5K | - | - | |
| 4774 | - | 100 | 36 | 8B13 | - | - | - | - | - | - | 17.4K | 17.4K | - | - | |
| 4775 | - | 100 | 36 | 12B16.5 | - | - | - | - | - | - | 297 | 26.5K | - | - | |
| 4776 | - | 100 | 36 | 12B19 | - | - | - | - | - | - | 26.5K | 26.5K | 15 | 3/4X3 | |
| 4777 | - | 100 | 36 | 14B22 | - | - | - | - | - | - | 26.5K | 26.5K | - | - | |
| 4778 | - | 100 | 36 | 12WF27 | - | - | - | - | - | - | 26.5K | 26.5K | - | - | |
| 4779 | - | 100 | 36 | 12WF27 | - | - | - | - | - | - | 26.5K | 26.5K | - | - | |
| 4780 | - | 100 | 36 | 10WF21 | - | - | - | - | - | - | 17.4K | 17.4K | - | - | |
| 4781 | 16X4 8X | 200 | 36 | - | 2-1/2 | 3/4 | 16 | 3/4 | - | - | 247H | 384B | - | - | |
| 4782 | - | 100 | 36 | 16WF40 | - | - | - | - | - | - | 101 | 101 | - | - | |
| 4783 | - | 100 | 36 | 12B16.5 | - | - | - | - | - | - | 26.5K | 503A | - | - | 3 |
| 4784 | - | 100 | 36 | 12B16.5 | - | - | - | - | - | - | 172C | 105L | - | - | |
| 4785 | - | 100 | 36 | 12B16.5 | - | - | - | - | - | - | 295D | 503A | - | - | |
| 4786 | - | 100 | 36 | 9CH13.4 | - | - | - | - | - | - | 17.4K | 17.4K | - | - | |
| 4787 | - | 100 | 36 | 10WF21 | - | - | - | - | - | - | 17.7K | 111I | - | - | |
| 4788 | - | 100 | 36 | 10WF21 | - | - | - | - | - | - | 17.7K | 111I | - | - | |
| 4789 | - | 100 | 36 | 10WF21 | - | - | - | - | - | - | 111I | 17.4K | - | - | |
| 4790 | - | 100 | 36 | 16B26 | - | - | - | - | - | - | 508 | 418B | - | - | 2 |
| 4791 | - | 100 | 36 | 16B26 | - | - | - | - | - | - | 418B | 418B | - | - | 2 |
| 4792 | - | 100 | 36 | 16B26 | - | - | - | - | - | - | 418B | 418C | - | - | 2 |
| 4793 | - | 100 | 36 | 16B26 | - | - | - | - | - | - | 26.5K | 418A | - | - | 2 |
| 4794 | - | 100 | 36 | 16B26 | - | - | - | - | - | - | 418A | 508 | - | - | 2 |
| 4795 | - | 100 | 36 | 16B26 | - | - | - | - | - | - | 418A | 418A | - | - | |
| 4796 | - | 100 | 36 | 16B26 | - | - | - | - | - | - | 418A | 418A | - | - | 1 |
| 4797 | - | 100 | 36 | 16B26 | - | - | - | - | - | - | 418A | 508 | - | - | 2 |
| 4798 | - | 100 | 36 | 16B26 | - | - | - | - | - | - | 418B | 26.5K | - | - | 2 |
| 4799 | - | 100 | 36 | 16B26 | - | - | - | - | - | - | 509A | 509A | - | - | 2 |

REMARKS

1 DETAIL 178A RIGHT END OF BEAM
2 DETAIL 512 INTERMEDIATE SUPPORT OF BEAM
3 RIGHT END OF BEAM SITS ON POST

LICENSED PROFESSIONAL ENGINEER — LESLIE E. ROBERTSON — No. 34360 — UNIVERSITY OF THE STATE OF NEW YORK

5-461-144

**SKILLING-HELLE-CHRISTIANSEN-ROBERTSON** — **Civil & Structural Engineers**

PROJECT: THE WORLD TRADE CENTER | TITLE: BEAM SCHEDULE TOWERS A AND B | DATE: 9/25/68

REVISIONS

| BEAM NO. | SIZE | TYPE | FY | SHAPE | PLATE 1 WIDTH | PLATE 1 THICK | PLATE 2 WIDTH | PLATE 2 THICK | DIMENSIONS LENGTH | DIMENSIONS DIM. A | SUPPORTS LEFT | SUPPORTS RIGHT | STUDS NO. | STUDS SIZE | REMARKS |
|---|---|---|---|---|---|---|---|---|---|---|---|---|---|---|---|
| 4800 | - | 100 | 36 | 16B26 | - | - | - | - | - | - | 509A | 418B | - | - | 1 |
| 4801 | - | 100 | 36 | 16B26 | - | - | - | - | - | - | 508 | 418B | - | - | 1 |
| 4802 | - | 100 | 36 | 18WF64 | - | - | - | - | - | - | 456H | 362B | - | - | |
| 4803 | - | 100 | 36 | 16WF40 | - | - | - | - | - | - | 26.5K | 455A | - | - | |
| 4804 | - | 100 | 36 | 16WF36 | - | - | - | - | - | - | 106 | 214 | - | - | |
| 4805 | - | 100 | 36 | 10WF21 | - | - | - | - | - | - | 260B | 508 | - | - | X |
| 4806 | - | 100 | 36 | 18I54.7 | - | - | - | - | - | - | 39.8K | 39.8K | - | - | |
| 4807 | - | 100 | 36 | 16WF40 | - | - | - | - | - | - | 455A | 26.5K | - | - | |
| 4808 | - | 100 | 36 | 16WF40 | - | - | - | - | - | - | 26.5K | 454A | - | - | |
| 4809 | - | 100 | 36 | 16WF40 | - | - | - | - | - | - | 454A | 26.5K | - | - | |
| 4810 | - | 100 | 36 | 16WF40 | - | - | - | - | - | - | 454A | 26.5K | - | - | |
| 4811 | - | 100 | 36 | 16WF36 | - | - | - | - | - | - | 214 | 106 | - | - | |
| 4812 | - | 100 | 36 | 8B13 | - | - | - | - | - | - | 17.4K | 17.4K | - | - | |
| 4813 | - | 100 | 36 | 8B13 | - | - | - | - | - | - | 17.4K | 17.4K | - | - | |
| 4814 | - | 100 | 36 | 16WF36 | - | - | - | - | - | - | 327 | 106 | - | - | |
| 4815 | - | 100 | 36 | 10B15 | - | - | - | - | - | - | 105 | 327 | - | - | |
| 4816 | - | 100 | 36 | 10B15 | - | - | - | - | - | - | 354 | 105 | - | - | |
| 4817 | - | 100 | 36 | 16B26 | - | - | - | - | - | - | 26.5K | 509A | - | - | |
| 4818 | - | 100 | 36 | 12B16.5 | - | - | - | - | - | - | 26.5K | 26.5K | - | - | |
| 4819 | - | 100 | 36 | 12B16.5 | - | - | - | - | - | - | 26.5K | 26.5K | 16 | 3/4X3 | |
| 4820 | - | 100 | 36 | 12B16.5 | - | - | - | - | - | - | 26.5K | 26.5K | 16 | 3/4X3 | |
| 4821 | - | 100 | 36 | 10WF21 | - | - | - | - | - | - | 17.4K | 17.4K | - | - | |
| 4822 | - | 100 | 36 | 10WF21 | - | - | - | - | - | - | 17.4K | 17.4K | - | - | |
| 4823 | - | 100 | 36 | 8B13 | - | - | - | - | - | - | 17.4K | 172C | - | - | |
| 4824 | - | 100 | 36 | 8B13 | - | - | - | - | - | - | 17.4K | 17.4K | 12 | 3/4X3 | |
| 4825 | - | 100 | 36 | 8B13 | - | - | - | - | - | - | 17.4K | 17.4K | - | - | |
| 4826 | - | 100 | 36 | 10WF25 | - | - | - | - | - | - | 17.4K | 17.4K | 24 | 3/4X3 | |
| 4827 | - | 100 | 36 | 12WF31 | - | - | - | - | - | - | 506B | 506A | - | - | |
| 4828 | - | 100 | 36 | 12WF45 | - | - | - | - | - | - | 26.5K | 26.5K | - | - | |
| 4829 | - | 100 | 36 | 12WF45 | - | - | - | - | - | - | 26.5K | 26.5K | - | - | |
| 4830 | - | 100 | 36 | 14B22 | - | - | - | - | - | - | 26.5K | 172B | - | - | |
| 4831 | - | 100 | 36 | 10WF21 | - | - | - | - | - | - | 17.4K | 17.4K | - | - | |
| 4832 | - | 100 | 36 | 16WF36 | - | - | - | - | - | - | 106 | 106 | - | - | |
| 4833 | - | 100 | 36 | 16WF40 | - | - | - | - | - | - | 102C | 102C | - | - | |

REMARKS

1 DETAIL 512 INTERMEDIATE SUPPORT OF BEAM

LICENSED PROFESSIONAL ENGINEER — LESLIE E. ROBERTSON — No. 34360 — UNIVERSITY OF THE STATE OF NEW YORK

5-A81-145

**SKILLING-HELLE-CHRISTIANSEN-ROBERTSON** — **Civil & Structural Engineers**

PROJECT: THE WORLD TRADE CENTER | TITLE: BEAM SCHEDULE TOWERS A AND B | DATE: 1/22/68

REVISIONS

| BEAM NO. | SIZE | TYPE | FY | PLATE 1 SHAPE | PLATE 1 WIDTH | PLATE 1 THICK | PLATE 2 WIDTH | PLATE 2 THICK | DIMENSIONS LENGTH | DIMENSIONS DIM. A | SUPPORTS LEFT | SUPPORTS RIGHT | STUDS NO. | STUDS SIZE | REMARKS |
|---|---|---|---|---|---|---|---|---|---|---|---|---|---|---|---|
| 4834 | - | 100 | 36 | 16WF40 | - | - | - | - | - | - | 101C | 101C | - | - | |
| 4835 | - | 100 | 36 | 12B16.5 | - | - | - | - | - | - | 504 | 504 | - | - | |
| 4836 | - | 100 | 36 | 16WF36 | - | - | - | - | - | - | 106 | 26.5K | - | - | |
| 4837 | - | 100 | 36 | 8B13 | - | - | - | - | - | - | 17.4K | 17.4K | - | - | |
| 4838 | - | 100 | 36 | 16WF36 | - | - | - | - | - | - | 106 | 106 | - | - | |
| 4839 | - | 100 | 36 | 16WF36 | - | - | - | - | - | - | 26.5K | 26.5K | - | - | |
| 4840 | - | 100 | 36 | 12B16.5 | - | - | - | - | - | - | 26.5K | 105 | - | - | |
| 4841 | - | 100 | 36 | 12B16.5 | - | - | - | - | - | - | 354 | 105 | - | - | |
| 4842 | - | 100 | 36 | 12B16.5 | - | - | - | - | - | - | 201 | 105 | - | - | |
| 4843 | - | 100 | 36 | 16B26 | - | - | - | - | - | - | 509A | 418B | - | - | 1 |
| 4844 | - | 100 | 36 | 16B26 | - | - | - | - | - | - | 418B | 508 | - | - | 1 |
| 4845 | - | 100 | 36 | 6B16 | - | - | - | - | - | - | 172C | 510A | - | - | |
| 4846 | - | 100 | 36 | 6B16 | - | - | - | - | - | - | 330A | 508 | - | - | |
| 4847 | - | 100 | 36 | 18WF60 | - | - | - | - | - | - | 317E | 317E | 20 | 3/4X3 | |
| 4848 | - | 100 | 36 | 18WF60 | - | - | - | - | - | - | 317F | 317E | 20 | 3/4X3 | |
| 4849 | - | 100 | 36 | 8B13 | - | - | - | - | - | - | 17.4K | 17.4K | - | - | |
| 4850 | - | 100 | 36 | 8B13 | - | - | - | - | - | - | 17.4K | 17.4K | - | - | |
| 4851 | - | 100 | 36 | 8CH11.5 | - | - | - | - | - | - | 17.4K | 17.4K | - | - | |
| 4852 | - | 100 | 36 | 12B16.5 | - | - | - | - | - | - | 105 | 354 | - | - | |
| 4853 | - | 100 | 36 | 12B16.5 | - | - | - | - | - | - | 105 | 201 | - | - | |
| 4854 | - | 100 | 36 | 12B16.5 | - | - | - | - | - | - | 105 | 26.5K | - | - | |
| 4855 | - | 100 | 50 | 8WF17 | - | - | - | - | - | - | 17.4K | 17.4K | - | - | |
| 4856 | - | 100 | 36 | 10B15 | - | - | - | - | - | - | | 201 | - | - | |
| 4857 | - | 100 | 36 | 12B16.5 | - | - | - | - | - | - | 26.5K | 201 | - | - | |
| 4858 | - | 100 | 36 | 18WF45 | - | - | - | - | - | - | 106 | 106 | - | - | |
| 4859 | - | 100 | 50 | 8WF17 | - | - | - | - | - | - | 17.4K | 17.4K | - | - | |
| 4860 | - | 100 | 36 | 12B16.5 | - | - | - | - | - | - | 314 | 106 | - | - | |
| 4861 | - | 100 | 36 | 16WF40 | - | - | - | - | - | - | 208H | 220I | 39 | 3/4X3 | J |
| 4862 | - | 100 | 36 | 12WF27 | - | - | - | - | - | - | 26.5K | 26.5K | - | - | |
| 4863 | - | 100 | 36 | 16WF40 | - | - | - | - | - | - | 220I | 208H | 39 | 3/4X3 | D |
| 4864 | - | 100 | 36 | 12WF27 | - | - | - | - | - | - | 435A | 435A | - | - | |
| 4865 | - | 100 | 36 | 12WF27 | - | - | - | - | - | - | 26.5K | 26.5K | - | - | |
| 4866 | - | 100 | 36 | 16WF40 | - | - | - | - | - | - | 208H | 287G | 39 | 3/4X3 | D |

REMARKS

1 DETAIL 512 INTERMEDIATE SUPPORT OF BEAM

LICENSED PROFESSIONAL ENGINEER — LESLIE E. ROBERTSON — No. 34360 — UNIVERSITY OF THE STATE OF NEW YORK

5-491-146

**SKILLING-HELLE-CHRISTIANSEN-ROBERTSON** — **Civil & Structural Engineers**

PROJECT: THE WORLD TRADE CENTER | TITLE: BEAM SCHEDULE TOWERS A AND B | DATE: 1/22/68

REVISIONS

| BEAM NO. | SIZE | TYPE | FY | PLATE 1 SHAPE | PLATE 1 WIDTH | PLATE 1 THICK | PLATE 2 WIDTH | PLATE 2 THICK | DIMENSIONS LENGTH | DIMENSIONS DIM. A | SUPPORTS LEFT | SUPPORTS RIGHT | STUDS NO. | STUDS SIZE | REMARKS |
|---|---|---|---|---|---|---|---|---|---|---|---|---|---|---|---|
| 4867 | - | 100 | 36 | 16WF36 | - | - | - | - | - | - | 287G | 208H | 39 | 3/4X3 | |
| 4868 | - | 100 | 36 | 16WF40 | - | - | - | - | - | - | 208H | 208H | 39 | 3/4X3D | |
| 4869 | - | 100 | 36 | 16WF36 | - | - | - | - | - | - | 26.5K | 208H | 10 | 3/4X3B | |
| 4870 | - | 100 | 36 | 16WF36 | - | - | - | - | - | - | 307C | 208H | 10 | 3/4X3B | |
| 4871 | - | 100 | 36 | 16WF36 | - | - | - | - | - | - | 26.5K | 208H | 10 | 3/4X3B | |
| 4872 | - | 100 | 36 | 16WF36 | - | - | - | - | - | - | 26.5K | 208H | 10 | 3/4X3B | X |
| 4873 | - | 100 | 36 | 16WF36 | - | - | - | - | - | - | 26.5K | 26.5K | - | - | |
| 4874 | - | 100 | 36 | 12B16.5 | - | - | - | - | - | - | 26.5K | 26.5K | 15 | 3/4X3 | |
| 4875 | - | 100 | 36 | 16B26 | - | - | - | - | - | - | 308A | 26.5K | 10 | 3/4X3C | |
| 4876 | - | 100 | 36 | 16WF36 | - | - | - | - | - | - | 26.5K | 26.5K | - | - | |
| 4877 | - | 100 | 36 | 12WF27 | - | - | - | - | - | - | 326A | 325A | - | - | |
| 4878 | - | 100 | 36 | 12WF27 | - | - | - | - | - | - | 325A | 325A | - | - | |
| 4879 | - | 100 | 36 | 12WF27 | - | - | - | - | - | - | 323A | 325A | - | - | |
| 4880 | - | 100 | 36 | 12WF27 | - | - | - | - | - | - | 325A | 325A | - | - | |
| 4881 | - | 100 | 36 | 12WF27 | - | - | - | - | - | - | 325A | 326A | - | - | |
| 4882 | - | 100 | 36 | 12WF27 | - | - | - | - | - | - | 326A | 325A | - | - | |
| 4883 | - | 100 | 36 | 12WF27 | - | - | - | - | - | - | 325A | 325A | - | - | |
| 4884 | - | 100 | 36 | 16B31 | - | - | - | - | - | - | 220E | 265A | - | - | |
| 4885 | - | 100 | 36 | 12WF27 | - | - | - | - | - | - | 325A | 325A | - | - | |
| 4886 | - | 100 | 36 | 12WF27 | - | - | - | - | - | - | 325A | 326A | - | - | |
| 4887 | - | 100 | 36 | 16WF45 | - | - | - | - | - | - | 220H | 205C | - | - | |
| 4888 | - | 100 | 36 | 16WF40 | - | - | - | - | - | - | 401B | 401B | - | - | |
| 4889 | - | 100 | 36 | 16WF45 | - | - | - | - | - | - | 205D | 220F | - | - | |
| 4890 | - | 100 | 36 | 16WF45 | - | - | - | - | - | - | 220H | 205C | - | - | |
| 4891 | - | 100 | 36 | 16WF40 | - | - | - | - | - | - | 401B | 401B | - | - | |
| 4892 | - | 100 | 36 | 16WF45 | - | - | - | - | - | - | 205C | 220F | - | - | |
| 4893 | - | 100 | 36 | 16B31 | - | - | - | - | - | - | 265A | 220E | - | - | |
| 4894 | - | 100 | 36 | 12WF36 | - | - | - | - | - | - | 283M | 26.5K | - | - | |
| 4895 | - | 100 | 36 | 10B15 | - | - | - | - | - | - | 17.4K | 495 | - | - | |
| 4896 | - | 100 | 36 | 12WF31 | - | - | - | - | - | - | 111C | 26.5K | - | - | |
| 4897 | - | 100 | 36 | 12B22 | - | - | - | - | - | - | 26.5K | 26.5K | - | - | |
| 4898 | - | 100 | 36 | 16WF36 | - | - | - | - | - | - | 26.5K | 354 | - | - | |
| 4899 | - | 100 | 36 | 12WF36 | - | - | - | - | - | - | 26.5K | 287F | - | - | |

LICENSED PROFESSIONAL ENGINEER — LESLIE E. ROBERTSON — No. 34360 — UNIVERSITY OF THE STATE OF NEW YORK

5-251-147

**SKILLING-HELLE-CHRISTIANSEN-ROBERTSON** — **Civil & Structural Engineers**

| PROJECT | TITLE | DATE |
|---|---|---|
| THE WORLD TRADE CENTER | BEAM SCHEDULE TOWERS A AND B | 1/22/68 |

REVISIONS

| BEAM NO. | SIZE | TYPE | FY | SHAPE | PLATE 1 WIDTH | PLATE 1 THICK | PLATE 2 WIDTH | PLATE 2 THICK | DIMENSIONS LENGTH | DIMENSIONS DIM. A | SUPPORTS LEFT | SUPPORTS RIGHT | STUDS NO. | STUDS SIZE | REMARKS |
|---|---|---|---|---|---|---|---|---|---|---|---|---|---|---|---|
| 4900 | - | 100 | 36 | 12WF36 | - | - | - | - | - | - | 170A | 287F | - | - | |
| 4901 | - | 100 | 36 | 12B22 | - | - | - | - | - | - | 310C | 26.5K | - | - | |
| 4902 | - | 100 | 36 | 12WF36 | - | - | - | - | - | - | 307D | 287B | - | - | |
| 4903 | - | 100 | 36 | 12WF36 | - | - | - | - | - | - | 26.5K | 287F | - | - | |
| 4904 | - | 100 | 36 | 12WF31 | - | - | - | - | - | - | 310C | 26.5K | - | - | |
| 4905 | - | 100 | 36 | 12WF36 | - | - | - | - | - | - | 26.5K | 287F | - | - | X |
| 4906 | - | 100 | 36 | 12WF27 | - | - | - | - | - | - | 17.4K | 17.4K | - | - | |
| 4907 | - | 100 | 36 | 12WF27 | - | - | - | - | - | - | 435A | 435A | - | - | |
| 4908 | - | 100 | 36 | 10WF21 | - | - | - | - | - | - | 17.4K | 17.4K | - | - | |
| 4909 | - | 100 | 36 | 12WF45 | - | - | - | - | - | - | 364B | 364B | - | - | |
| 4910 | - | 100 | 36 | 12B16.5 | - | - | - | - | - | - | 495 | 26.5K | - | - | |
| 4911 | - | 100 | 36 | 6CH13 | - | - | - | - | - | - | 17.4K | 17.4K | - | - | |
| 4912 | - | 100 | 36 | 6CH8.2 | - | - | - | - | - | - | 17.4K | 17.4K | - | - | |
| 4913 | - | 100 | 36 | 6CH8.2 | - | - | - | - | - | - | 17.4K | 17.4K | - | - | |
| 4914 | - | 100 | 36 | 15CH33.9 | - | - | - | - | - | - | 315 | 315 | - | - | |
| 4915 | 15X3-3/8 CH | 505 | 36 | 15CH40 | - | - | - | - | - | - | 26.5K | 26.5K | - | - | |
| 4916 | - | 100 | 36 | 24WF68 | - | - | - | - | - | - | 300 | 491 | - | - | |
| 4917 | - | 100 | 36 | 16WF36 | - | - | - | - | - | - | 262 | 300 | - | - | |
| 4918 | - | 100 | 36 | 8WF24 | - | - | - | - | - | - | 490 | 489 | - | - | |
| 4919 | - | 100 | 36 | 8WF24 | - | - | - | - | - | - | 492 | 489 | - | - | |
| 4920 | - | 100 | 36 | 24WF76 | - | - | - | - | - | - | 492 | 491 | - | - | |
| 4921 | - | 100 | 36 | 10B15 | - | - | - | - | - | - | 493 | 17.4K | - | - | |
| 4922 | - | 100 | 36 | 10B15 | - | - | - | - | - | - | 17.4K | 493 | - | - | |
| 4923 | - | 100 | 36 | 10B15 | - | - | - | - | - | - | 17.4K | 17.4K | - | - | |
| 4924 | - | 100 | 36 | 10B15 | - | - | - | - | - | - | 17.4K | 17.4K | - | - | |
| 4925 | 24X7 BU | 300 | 36 | - | 7 | 3/4 | 22-1/2 | 3/8 | - | - | 35.3K | 35.3K | - | - | |
| 4926 | 24X7 BU | 300 | 36 | - | 7 | 3/4 | 22-1/2 | 3/8 | - | - | 35.3K | 35.3K | - | - | |
| 4927 | - | 100 | 50 | 24WF68 | - | - | - | - | - | - | 317E | 381A | 26 | 3/4X3 | |
| 4928 | - | 100 | 50 | 24WF68 | - | - | - | - | - | - | 317E | 317E | 26 | 3/4X3 | |
| 4929 | 24X6 BU | 300 | 36 | - | 6 | 1-3/4 | 20-1/2 | 1/2 | - | - | 90.2K | 90.2K | - | - | |
| 4930 | - | 100 | 36 | 12B16.5 | - | - | - | - | - | - | 26.5K | 495 | - | - | |
| 4931 | - | 100 | 36 | 16WF36 | - | - | - | - | - | - | 26.5K | 287 | - | - | |
| 4932 | - | 100 | 36 | 10B15 | - | - | - | - | - | - | 495 | 17.4K | - | - | |
| 4933 | - | 100 | 36 | 14B22 | - | - | - | - | - | - | 26.5K | 26.5K | - | - | |

LICENSED PROFESSIONAL ENGINEER LESLIE E. ROBERTSON No. 34360 UNIVERSITY OF THE STATE OF NEW YORK

5-A-1-148

**SKILLING-HELLE-CHRISTIANSEN-ROBERTSON** — Civil & Structural Engineers

| PROJECT | TITLE | DATE |
|---|---|---|
| THE WORLD TRADE CENTER | BEAM SCHEDULE TOWERS A AND B | 12/21/67 |

REVISIONS

| BEAM NO. | SIZE | TYPE | FY | SHAPE | PLATE 1 WIDTH | PLATE 1 THICK | PLATE 2 WIDTH | PLATE 2 THICK | DIMENSIONS LENGTH | DIMENSIONS DIM. A | SUPPORTS LEFT | SUPPORTS RIGHT | STUDS NO. | STUDS SIZE | REMARKS |
|---|---|---|---|---|---|---|---|---|---|---|---|---|---|---|---|
| 4934 | 16X5-1/2BX | 202 | 36 | - | 4 | 1/4 | 16 | 3/4 | - | - | 483 | 450 | - | - | |
| 4935 | 16X5-1/2BX | 204 | 36 | - | 4 | 1/4 | 16 | 3/4 | - | - | 206A | 247G | - | - | |
| 4936 | 16X5-1/2BX | 204 | 36 | - | 4 | 1/4 | 16 | 3/4 | - | - | 328A | 225A | - | - | |
| 4937 | - | 100 | 36 | 6CH12 | - | - | - | - | - | - | 522 | 521 | - | - | |
| 4938 | 16X5-1/2BX | 204 | 36 | - | 4 | 1/4 | 16 | 3/4 | - | - | 328A | 397A | - | - | |
| 4939 | - | 100 | 36 | 15CH33.9 | - | - | - | - | - | - | 268A | 522 | - | - | X |
| 4940 | - | 100 | 36 | 12CH20.7 | - | - | - | - | - | - | 268A | 26.5K | - | - | |
| 4941 | - | 100 | 36 | 12CH20.7 | - | - | - | - | - | - | 518 | 26.5K | - | - | |
| 4942 | - | 100 | 36 | 12B16.5 | - | - | - | - | - | - | 111H | 26.5K | - | - | |
| 4943 | - | 100 | 36 | 14B26 | - | - | - | - | - | - | 283I | 497 | - | - | |
| 4944 | - | 100 | 36 | 14B26 | - | - | - | - | - | - | 214B | 283X | - | - | |
| 4945 | - | 100 | 36 | 14B26 | - | - | - | - | - | - | 370D | 26.5K | - | - | |
| 4946 | - | 100 | 36 | 14B26 | - | - | - | - | - | - | 283I | 170C | - | - | |
| 4947 | 16X4 BX | 200 | 36 | - | 2-1/2 | 3/4 | 16 | 3/4 | - | - | 247H | 384A | - | - | |
| 4948 | - | 100 | 36 | 8B13 | - | - | - | - | - | - | 283I | 386A | - | - | |
| 4949 | - | 100 | 36 | 12CH20.7 | - | - | - | - | - | - | 520 | 332A | - | - | |
| 4950 | - | 100 | 36 | 8B13 | - | - | - | - | - | - | 111W | 111W | - | - | |
| 4951 | - | 100 | 36 | 8B13 | - | - | - | - | - | - | 283I | 283I | - | - | |
| 4952 | - | 100 | 36 | 5CH6.7 | - | - | - | - | - | - | 496 | 268A | - | - | |
| 4953 | - | 100 | 36 | 6CH15.1 | - | - | - | - | - | - | 519 | 268A | - | - | |
| 4954 | 16X5-1/2BX | 200 | 36 | - | 4 | 1/4 | 16 | 3/4 | - | - | 225A | 328A | - | - | |
| 4955 | - | 100 | 36 | 14B22 | - | - | - | - | - | - | 499A | 26.5K | - | - | |
| 4956 | - | 100 | 36 | 16B31 | - | - | - | - | - | - | 205I | 396A | - | - | 2 |
| 4957 | - | 100 | 36 | 16B31 | - | - | - | - | - | - | 396A | 396A | - | - | |
| 4958 | - | 100 | 36 | 16B31 | - | - | - | - | - | - | 205I | 364C | - | - | 3 |
| 4959 | - | 100 | 36 | 16B31 | - | - | - | - | - | - | 364C | 364C | - | - | |
| 4960 | - | 100 | 36 | 16B31 | - | - | - | - | - | - | 364C | 364D | - | - | |
| 4961 | - | 100 | 36 | 8B13 | - | - | - | - | - | - | 364D | 364B | - | - | |
| 4962 | - | 100 | 36 | 16B31 | - | - | - | - | - | - | 364D | 364C | - | - | |
| 4963 | - | 100 | 36 | 16B31 | - | - | - | - | - | - | 364C | 364C | - | - | |
| 4964 | - | 100 | 36 | 16B31 | - | - | - | - | - | - | 364C | 205I | - | - | 4 |
| 4965 | - | 600 | 36 | 68X15.4 | - | - | - | - | - | - | 518 | 518 | - | - | 1,5 |
| 4966 | - | 100 | 36 | 12B16.5 | - | - | - | - | - | - | 17.4K | 17.4K | - | - | |

REMARKS

1. STANDARD STRUCTURAL TUBING 6X4X1/4
2. DETAIL 521 LEFT END OF BEAM
3. DETAIL 522 LEFT END OF BEAM
4. DETAIL 522 RIGHT END OF BEAM
5. DETAIL 389 INTERMEDIATE SUPPORT OF BEAM

REGISTERED PROFESSIONAL ENGINEER LESLIE E. ROBERTSON NEW YORK

5-A81-149

**SKILLING, HELLE, CHRISTIANSEN, ROBERTSON** — Structural & Civil Engineers

PROJECT: THE WORLD TRADE CENTER | TITLE: BEAM SCHEDULE TOWERS A AND 8 | DATE: 12/ 6/68

REVISIONS

| BEAM NO. | SIZE | TYPE | FY | PLATE 1 SHAPE | PLATE 1 WIDTH | PLATE 1 THICK | PLATE 2 WIDTH | PLATE 2 THICK | DIMENSIONS LENGTH | DIMENSIONS DIM. A | SUPPORTS LEFT | SUPPORTS RIGHT | STUDS NO. | STUDS SIZE | REMARKS |
|---|---|---|---|---|---|---|---|---|---|---|---|---|---|---|---|
| 4967 | - | 100 | 36 | 8B13 | - | - | - | - | - | - | 111H | 105H | - | - | |
| 4968 | - | 100 | 36 | 5CH6.7 | - | - | - | - | - | - | 363B | 363B | - | - | |
| 4969 | - | 600 | 36 | 6BX15.4 | - | - | - | - | - | - | 519 | 518 | - | - | 2,3 |
| 4970 | - | 600 | 36 | 6BX15.4 | - | - | - | - | - | - | 516 | 516 | - | - | 2,3 |
| 4971 | - | 600 | 36 | 6BX15.4 | - | - | - | - | - | - | 518 | 520 | - | - | 2,3 |
| 4972 | - | 100 | 36 | 16B31 | - | - | - | - | - | - | 205I | 364C | - | - | 4 |
| 4973 | - | 100 | 36 | 16B31 | - | - | - | - | - | - | 364C | 364C | - | - | |
| 4974 | - | 100 | 36 | 8B13 | - | - | - | - | - | - | 364D | 364D | - | - | |
| 4975 | - | 100 | 36 | 12B16.5 | - | - | - | - | - | - | 481 | 26.5K | - | - | |
| 4976 | - | 600 | 36 | 6BX15.4 | - | - | - | - | - | - | 516 | 388A | - | - | 3,5 |
| 4977 | - | 100 | 36 | 16WF96 | - | - | - | - | - | - | 26.5K | 26.5K | - | - | |
| 4978 | - | 100 | 36 | 16WF96 | - | - | - | - | - | - | 26.5K | 26.5K | - | - | |
| 4979 | - | 100 | 36 | 10WF21 | - | - | - | - | - | - | 17.4K | 101 | - | - | |
| 4980 | - | 100 | 36 | 24WF76 | - | - | - | - | - | - | 491 | 491 | - | - | |
| 4981 | - | 100 | 36 | 24WF76 | - | - | - | - | - | - | 491 | 305 | - | - | |
| 4982 | - | 100 | 36 | 21WF62 | - | - | - | - | - | - | 35.3K | 35.3K | - | - | |
| 4983 | - | 100 | 36 | 21WF62 | - | - | - | - | - | - | 35.3K | 35.3K | - | - | |
| 4984 | - | 100 | 36 | 16WF36 | - | - | - | - | - | - | 35.3K | 35.3K | - | - | |
| 4985 | - | 100 | 36 | 16B26 | - | - | - | - | - | - | 26.5K | 26.5K | - | - | |
| 4986 | - | 100 | 36 | 12B19 | - | - | - | - | - | - | 26.5K | 26.5K | - | - | |
| 4987 | - | 100 | 36 | 12B19 | - | - | - | - | - | - | 26.5K | 26.5K | - | - | |
| 4988 | - | 100 | 36 | 14B22 | - | - | - | - | - | - | 26.5K | 26.5K | 22 | 3/4X3 | |
| 4989 | 24X6 BU | 300 | 36 | - | 6 | 1-3/4 | 20-1/2 | 1/2 | - | - | 90.2K | 90.2K | - | - | |
| 4990 | - | 100 | 36 | 12WF45 | - | - | - | - | - | - | 201 | 105 | - | - | |
| 4991 | - | 100 | 36 | 12WF45 | - | - | - | - | - | - | 105 | 201 | - | - | |
| 4992 | - | 100 | 36 | 14B22 | - | - | - | - | - | - | 213 | 106 | 8 | 3/4X3 | |
| 4993 | - | 100 | 36 | 12WF27 | - | - | - | - | - | - | 105 | 26.5K | - | - | |
| 4994 | - | 100 | 36 | 12WF27 | - | - | - | - | - | - | 26.5K | 105 | - | - | |
| 4995 | - | 100 | 36 | 10WF25 | - | - | - | - | - | - | 505 | 17.4K | - | - | |
| 4996 | - | 100 | 36 | 16B26 | - | - | - | - | - | - | 26.5K | 453 | - | - | |
| 4997 | - | 100 | 36 | 10WF25 | - | - | - | - | - | - | 17.4K | 505 | - | - | |
| 4998 | - | 100 | 36 | 14B22 | - | - | - | - | - | - | 26.5K | 26.5K | - | - | |
| 4999 | 27X10WF | 452 | 36 | 27WF84 | 8-3/4 | 3/8 | - | - | 53FT 0 | 3FT2 | 71.0K | 152 | 88 | 3/4X3 | 1 |

REMARKS

1. DIMENSION B 20FT 3
2. DETAIL 389 CENTER SUPPORT OF BEAM
3. STANDARD STRUCTURAL TUBING 6X4X1/4
4. DETAIL 521 LEFT END OF BEAM
5. USE DETAIL 388B, RIGHT SUPPORT, TOWER B ONLY

LICENSED PROFESSIONAL ENGINEER — LESLIE E. ROBERTSON — NO. 24960 — NEW YORK

5-A81-150

**SKILLING-HELLE-CHRISTIANSEN-ROBERTSON** — **Civil & Structural Engineers**

PROJECT: THE WORLD TRADE CENTER | TITLE: BEAM SCHEDULE TOWERS A AND B | DATE: 10/22/68

REVISIONS

| BEAM NO. | SIZE | TYPE | FY | PLATE 1 SHAPE | PLATE 1 WIDTH | PLATE 1 THICK | PLATE 2 WIDTH | PLATE 2 THICK | DIMENSIONS LENGTH | DIMENSIONS DIM. A | SUPPORTS LEFT | SUPPORTS RIGHT | STUDS NO. | STUDS SIZE | REMARKS |
|---|---|---|---|---|---|---|---|---|---|---|---|---|---|---|---|
| 5001 | 27X10WF | 400 | 36 | 27WF84 | 8-3/4 | 3/8 | - | - | 54FT 0 | | 152 | 61.5K | 88 | 3/4X3 | 1 |
| 5002 | 27X10WF | 400 | 36 | 27WF84 | 8-3/4 | 3/8 | - | - | 54FT 0 | | 61.5K | 152 | 88 | 3/4X3 | 1 |
| 5003 | 27X10WF | 400 | 36 | 27WF84 | 8-3/4 | 7/8 | - | - | 54FT 0 | | 152 | 63.9K | 101 | 3/4X3 | 1 |
| 5004 | 27X10WF | 400 | 36 | 27WF84 | 8-3/4 | 7/8 | - | - | 54FT 0 | | 63.9K | 152 | 101 | 3/4X3 | 1 |
| 5005 | - | 440 | 36 | 12B19 | - | - | - | - | - | - | 508 | 497 | - | - | X |
| 5006 | - | 440 | 36 | 12B19 | - | - | - | - | - | - | 113A | 113A | - | - | |
| 5007 | - | 100 | 36 | 8B13 | - | - | - | - | - | - | 172C | 510A | - | - | |
| 5008 | 27X10WF | 400 | 36 | 27WF84 | 8 | 1- 3/8 | - | - | 54FT 0 | | 152 | 335L | 112 | 3/4X3 | 1 |
| 5009 | 24X12WF | 400 | 36 | 24WF100 | 10-3/4 | 3/8 | - | - | 54FT 0 | | 153 | 335L | 130 | 3/4X3 | 1 |
| 5010 | 30X15WF | 435 | 50 | 30WF172 | 13-3/4 | 1/2 | - | - | 54FT 0 | | 131.5K | 159 | 120 | 3/4X3 | 1 |
| 5011 | 27X10WF | 435 | 36 | 27WF84 | 8 | 1- 3/8 | - | - | 54FT 0 | | 66.7K | 160 | 112 | 3/4X3 | 1 |
| 5012 | 18X7-1/2WF | 400 | 50 | 18WF60 | 6 | 3/4 | - | - | 26FT 0 | | 166C | 172C | 90 | 3/4X3 | |
| 5013 | 30X10-1/2WF | 400 | 36 | 30WF99 | 9-1/4 | 1/2 | - | - | 54FT 0 | | 151 | 116.6K | 106 | 3/4X3 | 1 |
| 5014 | 30X10-1/2WF | 400 | 36 | 30WF99 | 9-1/4 | 1/2 | - | - | 54FT 0 | | 116.6K | 151 | 106 | 3/4X3 | 1 |
| 5015 | - | 100 | 36 | 12B16.5 | - | - | - | - | - | - | 26.5K | 26.5K | 15 | 3/4X3 | |
| 5016 | - | 100 | 36 | 12B16.5 | - | - | - | - | - | - | 26.5K | 26.5K | 15 | 3/4X3 | |
| 5017 | 16X8-1/2WF | 400 | 36 | 16WF58 | 7-1/2 | 7/16 | - | - | 32FT 3 | | 156A | 37.5K | 62 | 3/4X3 | |
| 5018 | 16X8-1/2WF | 400 | 36 | 16WF58 | 7-1/2 | 7/16 | - | - | 32FT 3 | | 37.5K | 156A | 62 | 3/4X3 | |
| 5019 | - | 100 | 36 | 16B26 | - | - | - | - | - | - | 156B | 26.5K | 24 | 3/4X3 | |
| 5020 | - | 100 | 36 | 16B26 | - | - | - | - | - | - | 26.5K | 156B | 24 | 3/4X3 | |
| 5021 | 18X7-1/2WF | 400 | 50 | 18WF60 | 6 | 3/4 | - | - | 26FT 0 | | 172C | 166C | 90 | 3/4X3 | |
| 5022 | - | 100 | 36 | 24WF76 | - | - | - | - | - | - | 491 | 491 | - | - | |
| 5023 | 24X9 WF | 454 | 50 | 24WF68 | 7-3/4 | 3/8 | - | - | 32FT 3 | | 153 | 63.8K | 72 | 3/4X3 | 2 |
| 5024 | 24X9 WF | 454 | 50 | 24WF68 | 7-3/4 | 3/8 | - | - | 32FT 3 | | 63.8K | 153 | 72 | 3/4X3 | 2 |
| 5025 | - | 100 | 36 | 16WF40 | - | - | - | - | - | - | 156A | 26.5K | 38 | 3/4X3 | |
| 5026 | 30X15WF | 458 | 36 | 30WF172 | 13-3/4 | 1/2 | - | - | 32FT 3 | | 151 | 237C | 180 | 3/4X3 | 2 |
| 5027 | 30X15WF | 454 | 36 | 30WF172 | 13-3/4 | 7/8 | - | - | 32FT 3 | | 151 | 237C | 196 | 3/4X3 | 2 |
| 5028 | 30X15WF | 458 | 36 | 30WF172 | 13-3/4 | 1/2 | - | - | 32FT 3 | | 237D | 151 | 180 | 3/4X3 | 2 |
| 5029 | 30X15WF | 454 | 36 | 30WF172 | 13-3/4 | 7/8 | - | - | 32FT 3 | | 237C | 151 | 196 | 3/4X3 | 2 |
| 5030 | - | 100 | 36 | 9CH13.4 | - | - | - | - | - | - | 17.4K | 17.4K | 10 | 3/4X3 | |
| 5031 | - | 100 | 36 | 9CH13.4 | - | - | - | - | - | - | 17.4K | 17.4K | 10 | 3/4X3 | |
| 5032 | - | 100 | 36 | 9CH13.4 | - | - | - | - | - | - | 17.4K | 17.4K | - | - | |
| 5033 | - | 100 | 36 | 9CH13.4 | - | - | - | - | - | - | 17.4K | 17.4K | - | - | |

REMARKS

1 DIMENSION B 28FT 3

2 DIMENSION B 6FT 11

LICENSED PROFESSIONAL ENGINEER — LESLIE E. ROBERTSON — No. 34360 — UNIVERSITY OF THE STATE OF NEW YORK

5-AB1-151

**SKILLING, HELLE, CHRISTIANSEN, ROBERTSON** — Structural & Civil Engineers

PROJECT: THE WORLD TRADE CENTER | TITLE: BEAM SCHEDULE TOWERS A AND B | DATE: 1/10/69

REVISIONS

| BEAM NO. | SIZE | TYPE | FY | SHAPE | PLATE 1 WIDTH | PLATE 1 THICK | PLATE 2 WIDTH | PLATE 2 THICK | DIMENSIONS LENGTH | DIMENSIONS DIM. A | SUPPORTS LEFT | SUPPORTS RIGHT | STUDS NO. | STUDS SIZE | REMARKS |
|---|---|---|---|---|---|---|---|---|---|---|---|---|---|---|---|
| 5034 | - | 100 | 36 | 14WF30 | - | - | - | - | - | - | 26.5K | 26.5K | 28 | 3/4X3 | |
| 5035 | - | 100 | 36 | 21WF68 | - | - | - | - | - | - | 35.3K | 35.3K | 51 | 3/4X3 | |
| 5036 | 16X8-1/2WF | 456 | 36 | 16WF58 | 7-1/2 | 7/16 | - | - | 32FT 3 | | 161 | 39.6K | 62 | 3/4X3 | |
| 5037 | - | 100 | 36 | 8B13 | - | - | - | - | - | - | 17.4K | 17.4K | - | - | |
| 5038 | - | 100 | 36 | 16B26 | - | - | - | - | - | - | 26.5K | 26.5K | - | - | |
| 5039 | 18X7-1/2WF | 400 | 36 | 18WF45 | 6 | 1/2 | - | - | 23FT 0 | | 42.9K | 49.0K | 51 | 3/4X3 | |
| 5040 | 18X8-1/2WF | 400 | 50 | 18WF64 | 7-1/2 | 3/4 | - | - | 32FT 3 | | 155 | 55.0K | 86 | 3/4X3 | |
| 5041 | - | 100 | 36 | 8B13 | - | - | - | - | - | - | 163A | 17.4K | 14 | 3/4X3 | |
| 5042 | - | 100 | 36 | 8B13 | - | - | - | - | - | - | 17.4K | 163A | 14 | 3/4X3 | |
| 5043 | - | 100 | 36 | 14WF34 | - | - | - | - | - | - | 26.5K | 157 | 31 | 3/4X3 | |
| 5044 | 27X10WF | 400 | 36 | 27WF84 | 8 | 1- 3/8 | - | - | 54FT 0 | | 152 | 66.7K | 112 | 3/4X3 | 1 |
| 5045 | 27X10WF | 400 | 36 | 27WF84 | 8 | 1- 3/8 | - | - | 54FT 0 | | 66.7K | 152 | 112 | 3/4X3 | 1 |
| 5046 | 27X10WF | 400 | 36 | 27WF94 | 8 | 1 | - | - | 54FT 0 | | 152 | 202F | 112 | 3/4X3 | 1 |
| 5047 | 27X10WF | 400 | 36 | 27WF94 | 8 | 1 | - | - | 54FT 0 | | 202F | 152 | 112 | 3/4X3 | 1 |
| 5048 | 30X15WF | 400 | 50 | 30WF172 | 13-3/4 | 1/2 | - | - | 54FT 0 | | 151 | 131.5K | 120 | 3/4X3 | 1 |
| 5049 | 30X15WF | 400 | 50 | 30WF172 | 13-3/4 | 1/2 | - | - | 54FT 0 | | 131.5K | 151 | 120 | 3/4X3 | 1 |
| 5050 | 27X10WF | 400 | 36 | 27WF94 | 8 | 1- 3/8 | - | - | 54FT 0 | | 152 | 67.0K | 112 | 3/4X3 | 1 |
| 5051 | 27X10WF | 400 | 36 | 27WF94 | 8 | 1- 3/8 | - | - | 54FT 0 | | 67.0K | 152 | 112 | 3/4X3 | 1 |
| 5052 | 30X10-1/2WF | 453 | 50 | 30WF108 | 8 | 1- 9/16 | - | - | 32FT 3 | | 237C | 151 | 124 | 3/4X3 | 2 |
| 5053 | 30X10-1/2WF | 453 | 50 | 30WF108 | 8 | 1- 9/16 | - | - | 32FT 3 | | 151 | 237C | 124 | 3/4X3 | 2 |
| 5054 | 16X8-1/2WF | 400 | 36 | 16WF58 | 7-1/2 | 7/16 | - | - | 32FT 3 | | 39.6K | 156A | 62 | 3/4X3 | |
| 5055 | 16X8-1/2WF | 400 | 36 | 16WF58 | 7-1/2 | 7/16 | - | - | 32FT 3 | | 156A | 39.6K | 62 | 3/4X3 | |
| 5056 | - | 100 | 36 | 16WF36 | - | - | - | - | - | - | 156B | 26.5K | 24 | 3/4X3 | |
| 5057 | - | 100 | 36 | 16WF36 | - | - | - | - | - | - | 156B | 26.5K | 24 | 3/4X3 | |
| 5058 | - | 100 | 36 | 8B13 | - | - | - | - | - | - | 163 | 17.4K | 14 | 3/4X3 | |
| 5059 | - | 100 | 36 | 12WF27 | - | - | - | - | - | - | 26.5K | 26.5K | - | - | |
| 5060 | - | 100 | 36 | 14WF30 | - | - | - | - | - | - | 26.5K | 26.5K | - | - | |
| 5061 | - | 100 | 36 | 14WF30 | - | - | - | - | - | - | 26.5K | 26.5K | - | - | |
| 5062 | - | 100 | 36 | 14WF30 | - | - | - | - | - | - | 26.5K | 26.5K | - | - | |
| 5063 | - | 100 | 36 | 14WF30 | - | - | - | - | - | - | 26.5K | 26.5K | - | - | |
| 5064 | - | 100 | 36 | 14WF30 | - | - | - | - | - | - | 26.5K | 26.5K | - | - | |
| 5065 | - | 100 | 36 | 14WF30 | - | - | - | - | - | - | 26.5K | 26.5K | - | - | |
| 5066 | - | 100 | 36 | 14WF30 | - | - | - | - | - | - | 26.5K | 26.5K | - | - | |

REMARKS

1 DIMENSION B 20FT 3

2 DIMENSION B 6FT 11

LICENSED PROFESSIONAL ENGINEER — LESLIE E. ROBERTSON — No. 34360 — REGISTERED BY THE STATE OF NEW YORK

5-AB1-152

**SKILLING-HELLE-CHRISTIANSEN-ROBERTSON** — **Civil & Structural Engineers**

| PROJECT | TITLE | DATE |
|---|---|---|
| THE WORLD TRADE CENTER | BEAM SCHEDULE TOWERS A AND B | 1/22/68 |

REVISIONS

| BEAM NO. | SIZE | TYPE | FY | SHAPE | PLATE 1 WIDTH | PLATE 1 THICK | PLATE 2 WIDTH | PLATE 2 THICK | DIMENSIONS LENGTH | DIM. A | SUPPORTS LEFT | SUPPORTS RIGHT | STUDS NO. | STUDS SIZE | REMARKS |
|---|---|---|---|---|---|---|---|---|---|---|---|---|---|---|---|
| 5067 | - | 100 | 36 | 14WF30 | - | - | - | - | - | - | 26.5K | 26.5K | - | - | |
| 5068 | - | 100 | 36 | 14WF30 | - | - | - | - | - | - | 26.5K | 26.5K | - | - | |
| 5069 | - | 100 | 36 | 14WF30 | - | - | - | - | - | - | 26.5K | 26.5K | - | - | |
| 5070 | - | 100 | 36 | 14WF30 | - | - | - | - | - | - | 26.5K | 26.5K | - | - | |
| 5071 | - | 100 | 36 | 14WF30 | - | - | - | - | - | - | 26.5K | 26.5K | - | - | |
| 5072 | - | 100 | 36 | 14WF34 | - | - | - | - | - | - | 26.5K | 157 | 31 | 3/4X3 | |
| 5073 | - | 100 | 36 | 12WF27 | - | - | - | - | - | - | 26.5K | 26.5K | - | - | |
| 5074 | 27X10WF | 400 | 36 | 27WF94 | 8 | 1- 3/8 | - | - | 54FT 0 | | 152 | 68.7K | 112 | 3/4X3 | 1 |
| 5075 | 27X10WF | 400 | 36 | 27WF94 | 8 | 1- 3/8 | - | - | 54FT 0 | | 68.7K | 152 | 112 | 3/4X3 | 1 |
| 5076 | 33X16WF | 400 | 36 | 33WF200 | 14-1/4 | 1- 3/4 | - | - | 54FT 0 | | 150 | 202F | 112 | 3/4X3 | 1 |
| 5077 | 33X16WF | 400 | 36 | 33WF200 | 14-1/4 | 1- 3/4 | - | - | 54FT 0 | | 150 | 99.6K | 112 | 3/4X3 | 1 |
| 5078 | 30X15WF | 400 | 50 | 30WF99 | 9-1/4 | 3/8 | - | - | 54FT 0 | | 151 | 84.3K | 112 | 3/4X3 | 1 |
| 5079 | 33X16WF | 400 | 36 | 33WF200 | 14-1/4 | 1- 3/4 | - | - | 54FT 0 | | 202F | 150 | 112 | 3/4X3 | 1 |
| 5080 | 30X15WF | 400 | 50 | 30WF99 | 9-1/4 | 3/8 | - | - | 54FT 0 | | 84.3K | 151 | 112 | 3/4X3 | 1 |
| 5081 | 33X16WF | 400 | 36 | 33WF200 | 14-1/4 | 1- 3/4 | - | - | 54FT 0 | | 99.6K | 150 | 112 | 3/4X3 | 1 |
| 5082 | 16X8-1/2WF | 400 | 36 | 16WF58 | 7-1/2 | 7/16 | - | - | 32FT 0 | | 161 | 812E | 62 | 3/4X3 | |
| 5083 | 27X10WF | 400 | 50 | 27WF94 | 8 | 1-3/8 | - | - | 54FT 0 | | 152 | 230 | 112 | 3/4X3 | 1 |
| 5084 | 27X10WF | 426 | 36 | 27WF84 | 8 | 1 -3/8 | - | - | 54FT 0 | | 160 | 66.7K | 112 | 3/4X3 | 1 |
| 5085 | - | 700 | 50 | 18WF55 | 9-1/2 | 1/2 | - | - | SEE SUPT. DET. | | 735B | 739 | 80 | 3/4X3 | |
| 5086 | 27X10WF | 426 | 36 | 27WF84 | 8 | 1 -3/8 | - | - | 54FT 0 | | 66.7K | 160 | 112 | 3/4X3 | 1 |
| 5087 | - | 700 | 36 | 16WF36 | 9 | 1/2 | - | - | SEE SUPT. DET. | | 729 | 728 | 24 | 3/4X3 | |
| 5088 | 27X14WF | 453 | 36 | 27WF145 | 12-3/4 | 1/2 | - | - | 32FT 3 | | 237A | 152 | 180 | 3/4X3 | 2 |
| 5089 | 24X12WF | 451 | 36 | 24WF100 | 10-3/4 | 3/8 | - | - | 53FT 5 | 2FT2-7/8 | 153 | 48.0K | 105 | 3/4X3 | 1 |
| 5090 | 16X8-1/2WF | 456 | 36 | 16WF58 | 7-1/2 | 7/16 | - | - | 32FT 3 | | 161 | 812D | 62 | 3/4X3 | |
| 5091 | 16X8-1/2WF | 400 | 36 | 16WF58 | 7-1/2 | 7/16 | - | - | 32FT 3 | | 812C | 161 | 62 | 3/4X3 | |
| 5092 | 30X15WF | 427 | 50 | 30WF99 | 9-1/4 | 3/8 | - | - | 54FT 0 | | 159 | 84.3K | 112 | 3/4X3 | 1 |
| 5093 | 30X15WF | 427 | 50 | 30WF99 | 9-1/4 | 3/8 | - | - | 54FT 0 | | 84.3K | 159 | 112 | 3/4X3 | 1 |
| 5094 | 33X16WF | 427 | 36 | 33WF200 | 14-1/4 | 1- 3/4 | - | - | 54FT 0 | | 159 | 99.6K | 112 | 3/4X3 | 1 |
| 5095 | 33X16WF | 427 | 36 | 33WF200 | 14-1/4 | 1- 3/4 | - | - | 54FT 0 | | 99.6K | 159 | 112 | 3/4X3 | 1 |
| 5096 | 27X10WF | 427 | 36 | 27WF94 | 8 | 1- 3/8 | - | - | 54FT 0 | | 160 | 68.7K | 112 | 3/4X3 | 1 |
| 5097 | 33X16WF | 427 | 36 | 33WF200 | 14-1/4 | 1- 3/4 | - | - | 54FT 0 | | 159 | 272A | 112 | 3/4X3 | 1 |
| 5098 | 33X16WF | 427 | 36 | 33WF200 | 14-1/4 | 1- 3/4 | - | - | 54FT 0 | | 272A | 159 | 112 | 3/4X3 | 1 |
| 5099 | 27X10WF | 427 | 36 | 27WF94 | 8 | 1- 3/8 | - | - | 54FT 0 | | 68.7K | 160 | 112 | 3/4X3 | 1 |

REMARKS

1 DIMENSION B = 20FT 3

2 DIMENSION B = 6FT 11

LICENSED PROFESSIONAL ENGINEER LESLIE E. ROBERTSON No. 34360 UNIVERSITY OF THE STATE OF NEW YORK

**SKILLING, HELLE, CHRISTIANSEN, ROBERTSON** — **Structural & Civil Engineers**

PROJECT: THE WORLD TRADE CENTER | TITLE: BEAM SCHEDULE TOWERS A AND B | DATE: 12/ 6/68

REVISIONS

| BEAM NO. | SIZE | TYPE | FY | SHAPE | PLATE 1 WIDTH | PLATE 1 THICK | PLATE 2 WIDTH | PLATE 2 THICK | DIMENSIONS LENGTH | DIMENSIONS DIM. A | SUPPORTS LEFT | SUPPORTS RIGHT | STUDS NO. | STUDS SIZE | REMARKS |
|---|---|---|---|---|---|---|---|---|---|---|---|---|---|---|---|
| 5100 | - | 100 | 36 | 16WF36 | - | - | - | - | - | - | 156A | 28.0K | 24 | 3/4X3 | |
| 5101 | - | 100 | 36 | 16WF36 | - | - | - | - | - | - | 28.0K | 156A | 24 | 3/4X3 | |
| 5102 | 16X8-1/2WF | 400 | 36 | 16WF58 | 7-1/2 | 7/16 | - | - | 32FT 3 | | 156 | 39.6K | 62 | 3/4X3 | 2 |
| 5103 | 16X8-1/2WF | 400 | 36 | 16WF58 | 7-1/2 | 7/16 | - | - | 32FT 3 | | 39.6K | 156 | 62 | 3/4X3 | 2 |
| 5104 | - | 100 | 36 | 16WF36 | - | - | - | - | - | - | 26.5K | 156B | 24 | 3/4X3 | |
| 5105 | - | 100 | 36 | 16WF36 | - | - | - | - | - | - | 26.5K | 156B | 24 | 3/4X3 | X |
| 5106 | - | 100 | 36 | 16WF58 | - | - | - | - | - | - | 156A | 26.5K | 38 | 3/4X3 | |
| 5107 | 27X10WF | 400 | 50 | 27WF94 | 8 | 1-3/8 | - | - | 54FT 0 | | 230 | 152 | 102 | 3/4X3 | 2 |
| 5108 | 30X10WF | 400 | 36 | 30WF99 | 9 | 3/4 | - | - | 54FT 0 | | 216 | 151 | 88 | 3/4X3 | 2 |
| 5109 | 27X10WF | 400 | 50 | 27WF94 | 8 | 1-3/8 | - | - | 54FT 0 | | 67.0K | 152 | 102 | 3/4X3 | 2 |
| 5110 | 30X10WF | 400 | 36 | 30WF99 | 9 | 3/4 | - | - | 54FT 0 | | 216 | 151 | 88 | 3/4X3 | 2 |
| 5111 | - | 100 | 36 | 30WF116 | - | - | - | - | - | - | 494 | 494 | - | - | |
| 5112 | 30X10WF | 400 | 36 | 30WF99 | 9 | 3/4 | - | - | 54FT 0 | | 151 | 216 | 88 | 3/4X3 | 2 |
| 5113 | - | 100 | 36 | 10WF21 | - | - | - | - | - | - | 753 | 17.4K | - | - | |
| 5114 | - | 700 | 36 | 12WF27 | 8-1/2 | 1/2 | - | - | SEE SUPT. DET. | | 736 | 739 | 36 | 3/4X3 | |
| 5115 | - | 440 | 36 | 12B16.5 | - | - | - | - | - | - | 508 | 508 | - | - | |
| 5116 | - | 100 | 36 | 8B13 | - | - | - | - | - | - | 172C | 172C | - | - | |
| 5117 | - | 440 | 36 | 12B16.5 | - | - | - | - | - | - | 508 | 508 | - | - | |
| 5118 | 30X10WF | 400 | 50 | 30WF99 | 9-1/4 | 3/8 | - | - | 54FT 0 | | 84.3K | 151 | 142 | 3/4X3 | 2 |
| 5119 | 30X10WF | 400 | 36 | 30WF99 | 9 | 3/4 | - | - | 54FT 0 | | 66.7K | 151 | 88 | 3/4X3 | 2 |
| 5120 | 33X16WF | 400 | 50 | 33WF200 | 14-1/4 | 1-3/4 | - | - | 54FT 0 | | 99.6K | 150 | 142 | 3/4X3 | 2 |
| 5121 | 30X10WF | 400 | 36 | 30WF99 | 9 | 3/4 | - | - | 54FT 0 | | 66.7K | 151 | 88 | 3/4X3 | 2 |
| 5122 | 33X16WF | 400 | 36 | 33WF200 | 14-1/4 | 1-3/4 | - | - | 54FT 0 | | 216 | 150 | 142 | 3/4X3 | 2 |
| 5123 | - | 700 | 36 | 12WF27 | 8-1/2 | 1/2 | - | - | SEE SUPT. DET. | | 739 | 738 | 36 | 3/4X3 | |
| 5124 | 27X10WF | 400 | 50 | 27WF94 | 8 | 1-3/8 | - | - | 54FT 0 | | 152 | 66.7K | 112 | 3/4X3 | 2 |
| 5125 | 30X10WF | 400 | 36 | 30WF99 | 9 | 3/4 | - | - | 54FT 0 | | 151 | 66.7K | - | 3/4X3 | |
| 5126 | 33X16WF | 400 | 50 | 33WF200 | 14-1/4 | 1-3/4 | - | - | 54FT 0 | | 150 | 269 | 142 | 3/4X3 | 2 |
| 5127 | 16X8-1/2WF | 400 | 36 | 16WF58 | 7-1/2 | 7/16 | - | - | 32FT 3 | | 161 | 50.0K | 62 | 3/4X3 | |
| 5128 | 33X16WF | 400 | 36 | 33WF200 | 14-1/4 | 1-3/4 | - | - | 54FT 0 | | 150 | 99.6K | 142 | 3/4X3 | 1 |
| 5129 | 30X10WF | 400 | 50 | 30WF99 | 9-1/4 | 3/8 | - | - | 54FT 0 | | 151 | 84.3K | 142 | 3/4X3 | 2 |
| 5130 | 30X10WF | 400 | 36 | 30WF99 | 9 | 3/4 | - | - | 54FT 0 | | 151 | 66.7K | 88 | 3/4X3 | 2 |
| 5131 | 30X15WF | 426 | 50 | 30WF172 | 13-3/4 | 1/2 | - | - | 54FT 0 | | 159 | 131.5K | 120 | 3/4X3 | 2 |
| 5132 | 24X12WF | 414 | 36 | 24WF100 | 10-3/4 | 3/8 | - | - | 52FT 0 | | 48.0K | 153 | 105 | 3/4X3 | 2 |
| 5133 | 24X12WF | 400 | 36 | 24WF100 | 10-3/4 | 3/8 | - | - | 54FT 0 | | 153 | 202D | 130 | 3/4X3 | 2 |

REMARKS

1 DIMENSION B 6FT 11
2 DIMENSION B 20FT 3

LICENSED PROFESSIONAL ENGINEER LESLIE E. ROBERTS JR NO. 36810 STATE OF NEW YORK

S-A31-154

**SKILLING, HELLE, CHRISTIANSEN, ROBERTSON** — Structural & Civil Engineers

PROJECT: THE WORLD TRADE CENTER | TITLE: BEAM SCHEDULE TOWERS A AND B | DATE: 12/ 6/68

REVISIONS

| BEAM NO. | SIZE | TYPE | FY | PLATE 1 SHAPE | PLATE 1 WIDTH | PLATE 1 THICK | PLATE 2 WIDTH | PLATE 2 THICK | DIMENSIONS LENGTH | DIMENSIONS DIM. A | SUPPORTS LEFT | SUPPORTS RIGHT | STUDS NO. | STUDS SIZE | REMARKS |
|---|---|---|---|---|---|---|---|---|---|---|---|---|---|---|---|
| 5134 | 24X12WF | 400 | 36 | 24WF120 | 10-3/4 | 3/4 | - | - | 55FT 0 | | 202D | 153 | 130 | 3/4X3 | 2 |
| 5135 | 24X12WF | 413 | 36 | 24WF100 | 10-3/4 | 3/8 | - | - | 52FT 0 | | 48.0K | 153 | 105 | 3/4X3 | 2 |
| 5136 | 24X12WF | 400 | 50 | 24WF100 | 10-3/4 | 7/8 | - | - | 54FT 0 | | 48.0K | 153 | 142 | 3/4X3 | 2 |
| 5137 | 18X7-1/2WF | 400 | 36 | 18WF45 | 6-1/4 | 3/8 | - | - | 32FT 3 | | 155 | 30.6K | 49 | 3/4X3 | |
| 5138 | 18X7-1/2WF | 400 | 36 | 18WF45 | 6-1/4 | 3/8 | - | - | 32FT 3 | | 30.6K | 155 | 49 | 3/4X3 | |
| 5139 | 24X20WF | 405 | 50 | 24WF130 | 20 | 1-3/4 | - | - | 54FT 0 | | 153 | 164.0K | - | - | (3) 2 |
| 5140 | 24X20WF | 405 | 50 | 24WF130 | 20 | 1-3/4 | - | - | 54FT 0 | | 164.0K | 153 | - | - | (3) 2 |
| 5141 | 27X14WF | 453 | 36 | 27WF145 | 12-3/4 | 1/2 | - | - | 32FT 3 | | 152 | 320B | 180 | 3/4X3 | 1 |
| 5142 | 27X14WF | 453 | 36 | 27WF145 | 12-3/4 | 1/2 | - | - | 32FT 3 | | 320A | 152 | 180 | 3/4X3 | 1 |
| 5143 | 12X6B | 401 | 36 | 12B16.5 | 6 | 3/8 | - | - | 10FT 0 | - | 26.5K | 26.5K | 52 | 3/4X3 | (3) |
| 5144 | - | 100 | 36 | 12B16.5 | - | - | - | - | - | - | 26.5K | 26.5K | 16 | 3/4X3 | |
| 5145 | 14X9WF | 401 | 36 | 14WF34 | 9 | 1/2 | - | - | 16FT 0 | - | 157 | 28.5K | 30 | 3/4X3 | (3) |
| 5146 | 14X9WF | 401 | 36 | 14WF34 | 9 | 1/2 | - | - | 16FT 0 | - | 28.5K | 157 | 30 | 3/4X3 | (3) |
| 5147 | 14X9WF | 401 | 36 | 14WF34 | 9 | 1/2 | - | - | 16FT 0 | - | 157 | 28.5K | 30 | 3/4X3 | (3) |
| 5148 | 14X9WF | 401 | 36 | 14WF34 | 9 | 1/2 | - | - | 16FT 0 | - | 28.5K | 157 | 30 | 3/4X3 | (3) |
| 5149 | 24X12WF | 400 | 36 | 24WF100 | 10-3/4 | 3/8 | - | - | 54FT 0 | | 153 | 48.0K | 105 | 3/4X3 | 2 |
| 5150 | 24X12WF | 400 | 36 | 24WF100 | 10-3/4 | 3/8 | - | - | 52FT 0 | | 48.0K | 153 | 105 | 3/4X3 | 2 |
| 5151 | 24X12WF | 451 | 36 | 24WF100 | 10-3/4 | 3/8 | - | - | 52FT 0 | | 48.0K | 153 | 105 | 3/4X3 | 2 |
| 5152 | 24X12WF | 400 | 36 | 24WF120 | 10-3/4 | 3/4 | - | - | 55FT 0 | | 219A | 153 | 130 | 3/4X3 | 2 |
| 5153 | - | 100 | 36 | 14B22 | - | - | - | - | - | - | 26.5K | 26.5K | - | 3/4X3 | |
| 5154 | - | 100 | 36 | 10B11.5 | - | - | - | - | - | - | 17.4K | 314 | - | - | |
| 5155 | - | 700 | 36 | 14WF30 | 8-3/4 | 1/2 | - | - | SEE SUPT. DET. | | 739 | 734B | 40 | 3/4X3 | |
| 5156 | - | 700 | 36 | 16WF36 | 9 | 1/2 | - | - | SEE SUPT. DET. | | 731 | 735A | 48 | 3/4X3 | |
| 5157 | - | 700 | 36 | 14WF30 | 8-3/4 | 1/2 | - | - | SEE SUPT. DET. | | 739 | 733A | 40 | 3/4X3 | |
| 5158 | - | 100 | 36 | 16B26 | - | - | - | - | - | - | 26.5K | 156B | 24 | 3/4X3 | |
| 5159 | - | 100 | 36 | 16B26 | - | - | - | - | - | - | 156B | 26.5K | 24 | 3/4X3 | |
| 5160 | - | 700 | 50 | 16WF40 | 9 | 1/2 | - | - | SEE SUPT. DET. | | 740 | 734B | 52 | 3/4X3 | |
| 5161 | - | 700 | 36 | 12B16.5 | 6 | 3/8 | - | - | SEE SUPT. DET. | | 739 | 739 | 15 | 3/4X3 | |
| 5162 | 18X8-3/4WF | 400 | 36 | 18WF77 | 6-1/2 | 3/4 | - | - | 32FT 3 | | 60.9K | 155 | 102 | 3/4X3 | |
| 5163 | 18X8-3/4WF | 400 | 36 | 18WF77 | 6-1/2 | 3/4 | - | - | 32FT 3 | | 155 | 60.9K | 102 | 3/4X3 | |
| 5164 | 30X15WF | 454 | 36 | 30WF172 | 13-3/4 | 1/2 | - | - | 32FT 3 | | 318A | 151 | 196 | 3/4X3 | 1 |
| 5165 | 30X15WF | 454 | 36 | 30WF172 | 13-3/4 | 1/2 | - | - | 32FT 3 | | 151 | 318A | 196 | 3/4X3 | 1 |
| 5166 | - | 100 | 36 | 16B31 | - | - | - | - | - | - | 156B | 26.5K | 30 | 3/4X3 | |

REMARKS

1 DIMENSION B 6FT 11
2 DIMENSION B 20FT 3

3 COVER PLATE 1 FOR 9TH FL., TOWER B ONLY.

* HOLD

LICENSED PROFESSIONAL ENGINEER — LESLIE E. ROBERTSON

5-A81-1b5

**SKILLING-HELLE-CHRISTIANSEN-ROBERTSON** — **Civil & Structural Engineers**

PROJECT: THE WORLD TRADE CENTER | TITLE: BEAM SCHEDULE TOWERS A AND B | DATE: 1/22/68

REVISIONS

| BEAM NO. | SIZE | TYPE | FY | PLATE 1 SHAPE | PLATE 1 WIDTH | PLATE 1 THICK | PLATE 2 WIDTH | PLATE 2 THICK | DIMENSIONS LENGTH | DIM. A | SUPPORTS LEFT | SUPPORTS RIGHT | STUDS NO. | STUDS SIZE | REMARKS |
|---|---|---|---|---|---|---|---|---|---|---|---|---|---|---|---|
| 5167 | - | 700 | 36 | 12WF27 | 8-1/2 | 1/2 | - | - | SEE SUPT. DET. | | 739 | 736 | 36 | 3/4X3 | |
| 5168 | - | 700 | 50 | 18WF55 | 9-1/2 | 1/2 | - | - | SEE SUPT. DET. | | 730 | 733A | 72 | 3/4X3 | |
| 5169 | - | 700 | 50 | 18WF50 | 9-1/2 | 1/2 | - | - | SEE SUPT. DET. | | 729 | 730 | 60 | 3/4X3 | |
| 5170 | 18X8-3/4WF | 400 | 36 | 18WF85 | 7 | 5/8 | - | - | 32FT 3 | | 155 | 80.0K | (92) | 3/4X3 | |
| 5171 | 18X8-3/4WF | 400 | 36 | 18WF85 | 7 | 1/2 | - | - | 32FT 3 | | 155 | 69.0K | (92) | 3/4X3 | |
| 5172 | 30X10WF | 400 | 36 | 30WF99 | 9 | 3/4 | - | - | 54FT 0 | | 151 | 216 | 88 | 3/4X3 | 1 X |
| 5173 | 30X10WF | 400 | 36 | 30WF99 | 9 | 3/4 | - | - | 54FT 0 | | 66.7K | 151 | 88 | 3/4X3 | 1 |
| 5174 | 27X12WF | 401 | 36 | 27WF114 | 12 | 3/4 | - | - | 46FT 0 | | 152 | 44.2K | 88 | 3/4X3 | |
| 5175 | 30X10WF | 400 | 36 | 30WF99 | 9 | 3/4 | - | - | 54FT 0 | | 269 | 151 | 88 | 3/4X3 | 1 |
| 5176 | - | 100 | 36 | 12B16.5 | - | - | - | - | - | - | 26.5K | 26.5K | - | - | |
| 5177 | - | 700 | 36 | 12WF27 | 8-1/2 | 1/2 | - | - | SEE SUPT. DET. | | 739 | 737 | 36 | 3/4X3 | |
| 5178 | 30X10WF | 400 | 36 | 30WF99 | 9 | 3/4 | - | - | 54FT 0 | | 151 | 66.7K | 88 | 3/4X3 | |
| 5179 | 27X12WF | 401 | 36 | 27WF114 | 12 | 3/4 | - | - | 46FT 0 | | 44.2K | 152 | 88 | 3/4X3 | |
| 5180 | - | 100 | 36 | 21WF55 | - | - | - | - | - | - | 157 | 26.5K | - | - | |
| 5181 | - | 100 | 36 | 14B22 | - | - | - | - | - | - | 26.5K | 157 | 22 | 3/4X3 | |
| 5182 | 30X15WF | 402 | 50 | 30WF172 | 10 | 5/8 | 10 | 5/8 | 46FT 0 | | 151 | 44.2K | - | - | 1 |
| 5183 | 30X15WF | 402 | 50 | 30WF172 | 10 | 5/8 | 10 | 5/8 | 46FT 0 | | 44.2K | 151 | - | - | 1 |
| 5184 | 30X15WF | 400 | 36 | 30WF210 | 13-3/4 | 3/4 | - | - | 32FT 3 | | 151 | 44.2K | 88 | 3/4X3 | 2 |
| 5185 | 30X15WF | 402 | 50 | 30WF172 | 10 | 5/8 | 10 | 5/8 | 26FT 0 | | 44.2K | 151 | - | - | 2 |
| 5186 | - | 100 | 36 | 21WF82 | - | - | - | - | - | - | 156 | 26.5K | - | - | |
| 5187 | 16X7-1/2WF | 400 | 36 | 16WF40 | 6 | 3/4 | - | - | 26FT 0 | | 26.5K | 156 | 70 | 3/4X3 | |
| 5188 | - | 100 | 36 | 12B16.5 | - | - | - | - | - | - | 26.5K | 26.5K | - | - | |
| 5189 | - | 700 | 36 | 12WF27 | 8-1/2 | 1/2 | - | - | SEE SUPT. DET. | | 739 | 736 | 36 | 3/4X3 | |
| 5190 | - | 700 | 50 | 18WF55 | 9-1/2 | 1/2 | - | - | SEE SUPT. DET. | | 739 | 735B | 72 | 3/4X3 | |
| 5191 | - | 100 | 36 | 14B22 | - | - | - | - | - | - | 157 | 26.5K | 22 | 3/4X3 | |
| 5192 | - | 442 | 50 | 30WF108 | - | - | - | - | - | - | 236A | 154A | (92) | 3/4X3 | |
| 5193 | - | 100 | 36 | 14B22 | - | - | - | - | - | - | 42.9 | 156 | - | - | |
| 5194 | - | 100 | 36 | 12B16.5 | - | - | - | - | - | - | 105 | 201 | - | - | |
| 5195 | - | 100 | 36 | 10B11.5 | - | - | - | - | - | - | 17.4K | 17.4K | - | - | |
| 5196 | - | 100 | 36 | 10B11.5 | - | - | - | - | - | - | 105 | 105 | - | - | |
| 5197 | - | 100 | 36 | 10B11.5 | - | - | - | - | - | - | 17.4K | 17.4K | - | - | |
| 5198 | - | 100 | 36 | 10B11.5 | - | - | - | - | - | - | 17.4K | 17.4K | - | - | |
| 5199 | - | 100 | 36 | 14B22 | - | - | - | - | - | - | 26.5K | 26.5K | - | - | |

REMARKS

1 DIMENSION B = 20 FT 3

2 DIMENSION B = 6 FT 11

LICENSED PROFESSIONAL ENGINEER LESLIE E. ROBERTSON No. 34360 STATE OF NEW YORK

**SKILLING-HELLE-CHRISTIANSEN-ROBERTSON** — **Civil & Structural Engineers**

PROJECT: THE WORLD TRADE CENTER | TITLE: BEAM SCHEDULE TOWERS A AND B | DATE: 9/15/67

REVISIONS

| | BEAM NO. | SIZE | TYPE | FY | SHAPE | PLATE 1 WIDTH | PLATE 1 THICK | PLATE 2 WIDTH | PLATE 2 THICK | DIMENSIONS LENGTH | DIMENSIONS DIM. A | SUPPORTS LEFT | SUPPORTS RIGHT | STUDS NO. | STUDS SIZE | REMARKS |
|---|---|---|---|---|---|---|---|---|---|---|---|---|---|---|---|---|
| | 5200 | - | 100 | 36 | 10B15 | - | - | - | - | - | - | 17.4K | 17.4K | - | - | |
| | 5201 | - | 100 | 36 | 10B15 | - | - | - | - | - | - | 201 | 105 | - | - | |
| | 5202 | - | 100 | 36 | 10B15 | - | - | - | - | - | - | 105 | 201 | - | - | |
| | 5203 | - | 100 | 36 | 12B16.5 | - | - | - | - | - | - | 26.5K | 26.5K | - | - | |
| | 5204 | - | 100 | 36 | 12B16.5 | - | - | - | - | - | - | 105 | 26.5K | - | - | |
| | 5205 | - | 100 | 36 | 12B16.5 | - | - | - | - | - | - | 105 | 26.5K | - | - | X |
| | 5206 | - | 100 | 36 | 10B15 | - | - | - | - | - | - | 17.4K | 17.4K | - | - | |
| * | 5207 | - | 100 | 36 | 14B22 | - | - | - | - | - | - | 26.5K | 26.5K | - | - | |
| * | 5208 | - | 100 | 36 | 14B22 | - | - | - | - | - | - | 26.5K | 26.5K | - | - | |
| * | 5209 | - | 100 | 36 | 14B22 | - | - | - | - | - | - | 26.5K | 26.5K | - | - | |
| | 5210 | - | 100 | 36 | 10B15 | - | - | - | - | - | - | 201 | 105 | - | - | |
| | 5211 | - | 100 | 36 | 10B15 | - | - | - | - | - | - | 105 | 354 | - | - | |
| | 5212 | - | 100 | 36 | 10B11.5 | - | - | - | - | - | - | 17.4K | 17.4K | - | - | |
| * | 5213 | - | 100 | 36 | 14B22 | - | - | - | - | - | - | 26.5K | 26.5K | - | - | |
| | 5214 | - | 100 | 36 | 10B15 | - | - | - | - | - | - | 105 | 201 | - | - | |
| | 5215 | - | 100 | 36 | 10B15 | - | - | - | - | - | - | 17.4K | 17.4K | - | - | |
| * | 5216 | - | 100 | 36 | 10B11.5 | - | - | - | - | - | - | 17.4K | 17.4K | - | - | |
| | 5217 | - | 100 | 36 | 10B11.5 | - | - | - | - | - | - | 105 | 201 | - | - | |
| | 5218 | - | 100 | 36 | 10WF21 | - | - | - | - | - | - | 101B | 17.4K | - | - | |
| | 5219 | - | 100 | 36 | 10B11.5 | - | - | - | - | - | - | 17.4K | 17.4K | - | - | |
| | 5220 | - | 100 | 36 | 10B11.5 | - | - | - | - | - | - | 17.4K | 17.4K | - | - | |
| | 5221 | - | 100 | 36 | 10B15 | - | - | - | - | - | - | 17.4K | 17.4K | - | - | |
| | 5222 | - | 100 | 36 | 12B16.5 | - | - | - | - | - | - | 26.5K | 26.5K | - | - | |
| | 5223 | - | 100 | 36 | 16WF36 | - | - | - | - | - | - | 106 | 354 | - | - | |
| | 5224 | - | 100 | 36 | 16WF36 | - | - | - | - | - | - | 106 | 314 | - | - | |
| | 5225 | - | 100 | 36 | 16WF36 | - | - | - | - | - | - | 314 | 106 | - | - | |
| | 5226 | - | 100 | 36 | 16WF36 | - | - | - | - | - | - | 106 | 106 | - | - | |
| | 5227 | - | 100 | 36 | 24WF76 | - | - | - | - | - | - | 299 | 299 | - | - | |
| * | 5228 | - | 100 | 36 | 14B22 | - | - | - | - | - | - | 26.5K | 26.5K | - | - | |
| * | 5229 | 16X7 WF | 400 | 36 | 16WF40 | 6 | 3/4 | - | - | - | - | 156 | 26.5K | 70 | 3/4X3 | |
| | 5230 | - | 100 | 36 | 16WF36 | - | - | - | - | - | - | 106 | 106 | - | - | |
| | 5231 | - | 100 | 36 | 16WF36 | - | - | - | - | - | - | 106 | 106 | - | - | |
| | 5232 | - | 100 | 36 | 16WF36 | - | - | - | - | - | - | 106 | 106 | - | - | |
| | 5233 | - | 100 | 36 | 16WF36 | - | - | - | - | - | - | 106 | 106 | - | - | |

LICENSED PROFESSIONAL ENGINEER — LESLIE E. ROBERTSON — No. 34360 — UNIVERSITY OF THE STATE OF NEW YORK

*HOLD

**SKILLING-HELLE-CHRISTIANSEN-ROBERTSON** — **Civil & Structural Engineers**

PROJECT: THE WORLD TRADE CENTER | TITLE: BEAM SCHEDULE TOWERS A AND B | DATE: 1/22/68

REVISIONS

| BEAM NO. | SIZE | TYPE | FY | SHAPE | PLATE 1 WIDTH | PLATE 1 THICK | PLATE 2 WIDTH | PLATE 2 THICK | DIMENSIONS LENGTH | DIMENSIONS DIM. A | SUPPORTS LEFT | SUPPORTS RIGHT | STUDS NO. | STUDS SIZE | REMARKS |
|---|---|---|---|---|---|---|---|---|---|---|---|---|---|---|---|
| 5234 | - | 100 | 36 | 12B16.5 | - | - | - | - | - | - | 106 | 106 | - | - | |
| 5235 | - | 100 | 36 | 14WF30 | - | - | - | - | - | - | 26.5K | 26.5K | - | - | |
| 5236 | 27X10WF | 432 | 36 | 27WF94 | 8 | 1 | - | - | 44FT 7 | 2FT 7 | 160 | 272A | 112 | 3/4X3 | 1 |
| 5237 | - | 100 | 36 | 12B16.5 | - | - | - | - | - | - | 105 | 106 | - | - | |
| 5238 | - | 442 | 50 | 30WF108 | - | - | - | - | - | - | 154A | 236A | 92 | 3/4X3 | |
| 5239 | - | 100 | 36 | 12B16.5 | - | - | - | - | - | - | 26.5K | 106 | - | - | X |
| 5240 | - | 100 | 36 | 18WF45 | - | - | - | - | - | - | 106 | 314 | - | - | |
| 5241 | - | 100 | 36 | 18WF45 | - | - | - | - | - | - | 106 | 106 | - | - | |
| 5242 | - | 100 | 36 | 14WF30 | - | - | - | - | - | - | 26.5K | 26.5K | - | - | |
| 5243 | - | 100 | 36 | 14B22 | - | - | - | - | - | - | 26.5K | 26.5K | - | - | |
| 5244 | 14X7 WF | 400 | 36 | 16WF40 | 6 | 3/4 | - | - | - | - | 156 | 26.5K | 70 | 3/4X3 | |
| 5245 | - | 100 | 36 | 12B16.5 | - | - | - | - | - | - | 106 | 26.5K | - | - | |
| 5246 | - | 100 | 36 | 12B16.5 | - | - | - | - | - | - | 26.5K | 26.5K | - | - | |
| 5247 | - | 100 | 36 | 12B16.5 | - | - | - | - | - | - | 26.5K | 105 | - | - | |
| 5248 | - | 100 | 36 | 12B16.5 | - | - | - | - | - | - | 314 | 105 | - | - | |
| 5249 | - | 100 | 36 | 12B16.5 | - | - | - | - | - | - | 26.5K | 26.5K | - | - | |
| 5250 | - | 100 | 36 | 12B16.5 | - | - | - | - | - | - | 201 | 105 | - | - | |
| 5251 | - | 700 | 36 | 12WF27 | 8-1/2 | 1/2 | - | - | SEE SUPT. DET. | | 738 | 739 | 22 | 3/4X3 | |
| 5252 | - | 700 | 36 | 12WF27 | 8-1/2 | 1/2 | - | - | SEE SUPT. DET. | | 739 | 738 | 22 | 3/4X3 | |
| 5253 | - | 700 | 36 | 12WF27 | 8-1/2 | 1/2 | - | - | SEE SUPT. DET. | | 738 | 739 | 36 | 3/4X3 | |
| 5254 | - | 700 | 36 | 12WF27 | 8-1/2 | 1/2 | - | - | SEE SUPT. DET. | | 739 | 738 | 22 | 3/4X3 | |
| 5255 | - | 700 | 36 | 12WF27 | 8-1/2 | 1/2 | - | - | SEE SUPT. DET. | | 736 | 739 | 36 | 3/4X3 | |
| 5256 | - | 700 | 36 | 12WF27 | 8-1/2 | 1/2 | - | - | SEE SUPT. DET. | | 739 | 736 | 36 | 3/4X3 | |
| 5257 | - | 700 | 36 | 12WF27 | 8-1/2 | 1/2 | - | - | SEE SUPT. DET. | | 737 | 739 | 36 | 3/4X3 | |
| 5258 | - | 700 | 50 | 16WF40 | 9 | 1/2 | - | - | SEE SUPT. DET. | | 740 | 735A | 52 | 3/4X3 | |
| 5259 | - | 700 | 36 | 16WF36 | 9 | 1/2 | - | - | SEE SUPT. DET. | | 735A | 732 | 24 | 3/4X3 | |
| 5260 | - | 700 | 36 | 16WF36 | 9 | 1/2 | - | - | SEE SUPT. DET. | | 731 | 735A | 24 | 3/4X3 | |
| 5261 | - | 700 | 50 | 18WF45 | 9-1/2 | 1/2 | - | - | SEE SUPT. DET. | | 728 | 733A | 58 | 3/4X3 | |
| 5262 | - | 700 | 50 | 16WF40 | 9 | 1/2 | - | - | SEE SUPT. DET. | | 740 | 733A | 52 | 3/4X3 | |
| 5263 | - | 700 | 50 | 16WF40 | 9 | 1/2 | - | - | SEE SUPT. DET. | | 729 | 733A | 52 | 3/4X3 | |
| 5264 | - | 700 | 50 | 18WF45 | 9-1/2 | 1/2 | - | - | SEE SUPT. DET. | | 732 | 728 | 58 | 3/4X3 | |
| 5265 | - | 700 | 50 | 18WF45 | 9-1/2 | 1/2 | - | - | SEE SUPT. DET. | | 739 | 740 | 58 | 3/4X3 | |
| 5266 | - | 700 | 50 | 18WF45 | 9-1/2 | 1/2 | - | - | SEE SUPT. DET. | | 739 | 729 | 58 | 3/4X3 | |

REMARKS

1 DIMENSION B = 20FT 3

LICENSED PROFESSIONAL ENGINEER — LESLIE E. ROBERTSON — No. 34360 — UNIVERSITY OF THE STATE OF NEW YORK

**SKILLING, HELLE, CHRISTIANSEN, ROBERTSON** — **Structural & Civil Engineers**

PROJECT: THE WORLD TRADE CENTER | TITLE: BEAM SCHEDULE TOWERS A AND B | DATE: 12/ 6/68

REVISIONS

| BEAM NO. | SIZE | TYPE | FY | SHAPE | PLATE 1 WIDTH | PLATE 1 THICK | PLATE 2 WIDTH | PLATE 2 THICK | DIMENSIONS LENGTH | DIM. A | SUPPORTS LEFT | SUPPORTS RIGHT | STUDS NO. | STUDS SIZE | REMARKS |
|---|---|---|---|---|---|---|---|---|---|---|---|---|---|---|---|
| 5267 | - | 700 | 50 | 16WF36 | 9 | 1/2 | - | - | SEE SUPT. DET. | | 739 | 740 | 48 | 3/4X3 | |
| 5268 | - | 700 | 50 | 16WF36 | 9 | 1/2 | - | - | SEE SUPT. DET. | | 739 | 729 | 48 | 3/4X3 | |
| 5269 | - | 700 | 50 | 18WF60 | 9-1/2 | 1/2 | - | - | SEE SUPT. DET. | | 732 | 701 | 82 | 3/4X3 | |
| 5270 | - | 700 | 50 | 18WF64 | 10-3/4 | 1/2 | - | - | SEE SUPT. DET. | | 702 | 731 | 82 | 3/4X3 | |
| 5271 | - | 700 | 50 | 18WF45 | 9-1/2 | 1/2 | - | - | SEE SUPT. DET. | | 733 | 728 | 58 | 3/4X3 | |
| 5272 | - | 700 | 50 | 16WF40 | 9 | 1/2 | - | - | SEE SUPT. DET. | | 734B | 740 | 52 | 3/4X3 | X |
| 5273 | - | 700 | 50 | 16WF40 | 9 | 1/2 | - | - | SEE SUPT. DET. | | 733A | 729 | 52 | 3/4X3 | |
| 5274 | - | 700 | 50 | 18WF45 | 9-1/2 | 1/2 | - | - | SEE SUPT. DET. | | 728 | 732 | 58 | 3/4X3 | |
| 5275 | - | 700 | 50 | 18WF45 | 9-1/2 | 1/2 | - | - | SEE SUPT. DET. | | 740 | 739 | 52 | 3/4X3 | |
| 5276 | - | 700 | 50 | 18WF45 | 9-1/2 | 1/2 | - | - | SEE SUPT. DET. | | 729 | 739 | 52 | 3/4X3 | |
| 5277 | - | 700 | 50 | 16WF36 | 9 | 1/2 | - | - | SEE SUPT. DET. | | 740 | 739 | 48 | 3/4X3 | |
| 5278 | - | 700 | 50 | 16WF36 | 9 | 1/2 | - | - | SEE SUPT. DET. | | 729 | 739 | 48 | 3/4X3 | |
| 5279 | - | 700 | 50 | 18WF55 | 9-1/2 | 1/2 | - | - | SEE SUPT. DET. | | 733B | 739 | 80 | 3/4X3 | |
| 5280 | - | 700 | 50 | 18WF55 | 9-1/2 | 1/2 | - | - | SEE SUPT. DET. | | 739 | 733B | 72 | 3/4X3 | |
| 5281 | - | 700 | 50 | 18WF50 | 9-1/2 | 1/2 | - | - | SEE SUPT. DET. | | 728 | 729 | 60 | 3/4X3 | |
| 5282 | - | 700 | 50 | 18WF50 | 9-1/2 | 1/2 | - | - | SEE SUPT. DET. | | 729 | 729 | 60 | 3/4X3 | |
| 5283 | - | 700 | 50 | 18WF64 | 10-3/4 | 1/2 | - | - | SEE SUPT. DET. | | 734A | 728 | 58 | 3/4X3 | |
| 5284 | - | 700 | 50 | 16WF40 | 9 | 1/2 | - | - | SEE SUPT. DET. | | 735A | 740 | 52 | 3/4X3 | |
| 5285 | - | 700 | 50 | 18WF55 | 9-1/2 | 1/2 | - | - | SEE SUPT. DET. | | 702 | 731 | 30 | 3/4X3 | |
| 5286 | - | 442 | 36 | 30WF108 | - | - | - | - | - | - | 231A | 154A | (100) | 3/4X3 | |
| 5287 | - | 700 | 50 | 18WF70 | 10-3/4 | 1/2 | - | - | SEE SUPT. DET. | | 728 | 731 | 64 | 3/4X3 | |
| 5288 | - | 100 | 36 | 16WF36 | - | - | - | - | - | - | 26.5K | 26.5K | - | - | 1 |
| 5289 | - | 100 | 36 | 9CH13.4 | - | - | - | - | - | - | 17.4K | 17.4K | - | - | |
| 5290 | - | 100 | 36 | 9CH13.4 | - | - | - | - | - | - | 17.4K | 17.4K | 10 | 3/4X3 | |
| 5291 | - | 100 | 36 | 18WF45 | - | - | - | - | - | - | 28.0K | 28.0K | - | - | |
| 5292 | - | 100 | 36 | 12WF27 | - | - | - | - | - | - | 26.5K | 26.5K | - | - | |
| 5293 | - | 100 | 36 | 10B15 | - | - | - | - | - | - | 17.4K | 17.4K | - | - | |
| 5294 | - | 100 | 36 | 16B26 | - | - | - | - | - | - | 26.5K | 26.5K | 12 | 3/4X3 | |
| 5295 | - | 100 | 36 | 18WF50 | - | - | - | - | - | - | 26.5K | 26.5K | 40 | 3/4X3 | |
| 5296 | - | 403 | 50 | 30WF108 | - | - | - | - | - | - | 324B | 154A | 140 | 3/4X3 | |
| 5297 | - | 100 | 36 | 14WF30 | - | - | - | - | - | - | 26.5K | 164 | - | - | |
| 5298 | 18X7-1/2WF | 400 | 50 | 18WF60 | 6-1/2 | 3/4 | - | - | 27FT 0 | | 54.0K | 166A | 56 | 3/4X3 | |
| 5299 | - | 100 | 36 | 12WF27 | - | - | - | - | - | - | 26.5K | 155 | - | - | |

REMARKS

1 REINFORCE COPED BEAM END, SEE DETAIL 472A-G

* HOLD

LICENSED PROFESSIONAL ENGINEER — LESLIE E. ROBERTSON — No. 54360 — STATE OF NEW YORK — UNIVERSITY OF

5-AB1-159

**SKILLING-HELLE-CHRISTIANSEN-ROBERTSON** — Civil & Structural Engineers

PROJECT: THE WORLD TRADE CENTER | TITLE: BEAM SCHEDULE TOWERS A AND B | DATE: 10/22/68

REVISIONS

| BEAM NO. | SIZE | TYPE | FY | PLATE 1 SHAPE | PLATE 1 WIDTH | PLATE 1 THICK | PLATE 2 WIDTH | PLATE 2 THICK | DIMENSIONS LENGTH | DIMENSIONS DIM. A | SUPPORTS LEFT | SUPPORTS RIGHT | STUDS NO. | STUDS SIZE | REMARKS |
|---|---|---|---|---|---|---|---|---|---|---|---|---|---|---|---|
| 5300 | - | 100 | 50 | 21WF55 | - | - | - | - | - | - | 767A | 101C | 52 | 3/4X3 | |
| 5301 | - | 100 | 50 | 21WF55 | - | - | - | - | - | - | 101C | 767A | 52 | 3/4X3 | |
| 5302 | - | 100 | 50 | 21WF55 | - | - | - | - | - | - | 767A | 53.0K | 52 | 3/4X3 | |
| 5303 | - | 100 | 50 | 21WF55 | - | - | - | - | - | - | 53.0K | 767A | 52 | 3/4X3 | |
| 5304 | - | 100 | 50 | 21WF55 | - | - | - | - | - | - | 53.0K | 53.0K | 52 | 3/4X3 | |
| 5305 | - | 100 | 50 | 21WF55 | - | - | - | - | - | - | 101C | 53.0K | 52 | 3/4X3 | |
| 5306 | - | 100 | 50 | 21WF55 | - | - | - | - | - | - | 53.0K | 101C | 52 | 3/4X3 | |
| 5307 | - | 100 | 50 | 21WF62 | - | - | - | - | - | - | 53.0K | 53.0K | 58 | 3/4X3 | |
| 5308 | - | 100 | 50 | 21WF62 | - | - | - | - | - | - | 101C | 53.0K | 58 | 3/4X3 | |
| 5309 | - | 100 | 50 | 21WF62 | - | - | - | - | - | - | 53.0K | 101C | 58 | 3/4X3 | |
| 5310 | - | 100 | 50 | 24WF68 | - | - | - | - | - | - | 102C | 102C | 64 | 3/4X3 | |
| 5311 | - | 100 | 50 | 21WF55 | - | - | - | - | - | - | 53.0K | 766A | 52 | 3/4X3 | |
| 5312 | - | 100 | 36 | 10WF21 | - | - | - | - | - | - | 770 | 17.4K | 20 | 3/4X3 | |
| 5313 | - | 100 | 36 | 10WF21 | - | - | - | - | - | - | 769 | 17.4K | 20 | 3/4X3 | |
| 5314 | - | 100 | 36 | 10WF21 | - | - | - | - | - | - | 765 | 17.4K | 20 | 3/4X3 | |
| 5315 | - | 100 | 36 | 10WF21 | - | - | - | - | - | - | 17.4K | 770 | 20 | 3/4X3 | |
| 5316 | - | 100 | 36 | 10WF21 | - | - | - | - | - | - | 17.4K | 769 | 20 | 3/4X3 | |
| 5317 | - | 100 | 36 | 10WF21 | - | - | - | - | - | - | 17.4K | 765 | 20 | 3/4X3 | |
| 5318 | - | 100 | 50 | 21WF62 | - | - | - | - | - | - | 767A | 101C | 58 | 3/4X3 | |
| 5319 | - | 100 | 50 | 21WF62 | - | - | - | - | - | - | 101C | 767A | 58 | 3/4X3 | |
| 5320 | - | 100 | 50 | 21WF55 | - | - | - | - | - | - | 766A | 53.0K | 52 | 3/4X3 | |
| 5321 | - | 100 | 50 | 21WF68 | - | - | - | - | - | - | 101C | 101C | 64 | 3/4X3 | |
| 5322 | - | 100 | 36 | 10WF21 | - | - | - | - | - | - | 770 | 102C | 20 | 3/4X3 | |
| 5323 | - | 100 | 36 | 10WF21 | - | - | - | - | - | - | 102C | 770 | 20 | 3/4X3 | |
| 5324 | - | 100 | 50 | 24WF68 | - | - | - | - | - | - | 102C | 172A | 64 | 3/4X3 | |
| 5325 | - | 100 | 50 | 24WF68 | - | - | - | - | - | - | 172A | 102C | 64 | 3/4X3 | |
| 5326 | - | 100 | 50 | 24WF76 | - | - | - | - | - | - | 767B | 48.0K | 70 | 3/4X3 | |
| 5327 | - | 100 | 50 | 24WF76 | - | - | - | - | - | - | 766B | 48.0K | 70 | 3/4X3 | |
| 5328 | - | 100 | 50 | 21WF62 | - | - | - | - | - | - | 772A | 44.2K | 58 | 3/4X3 | |
| 5329 | - | 100 | 36 | 10WF21 | - | - | - | - | - | - | 17.4K | 751A | - | - | |
| 5330 | 18X7-1/2WF | 400 | 50 | 18WF60 | 6 | 3/4 | - | - | 26FT 0 | | 166C | 467A | 90 | 3/4X3 | |
| 5331 | - | 100 | 50 | 12WF79 | - | - | - | - | - | - | 101B | 101B | - | - | |
| 5332 | - | 100 | 36 | 8813 | - | - | - | - | - | - | 17.4K | 17.4K | - | - | |
| 5333 | - | 100 | 50 | 12WF79 | - | - | - | - | - | - | 101B | 750B | - | - | |

5-A81-166

**SKILLING-HELLE-CHRISTIANSEN-ROBERTSON** — **Civil & Structural Engineers**

PROJECT: THE WORLD TRADE CENTER | TITLE: BEAM SCHEDULE TOWERS A AND B | DATE: 7/17/68

REVISIONS

| BEAM NO. | SIZE | TYPE | FY | SHAPE | PLATE 1 WIDTH | PLATE 1 THICK | PLATE 2 WIDTH | PLATE 2 THICK | DIMENSIONS LENGTH | DIM. A | SUPPORTS LEFT | SUPPORTS RIGHT | STUDS NO. | STUDS SIZE | REMARKS |
|---|---|---|---|---|---|---|---|---|---|---|---|---|---|---|---|
| 5334 | - | 100 | 50 | 12WF92 | - | - | - | - | - | - | 101B | 101B | - | - | |
| 5335 | - | 467 | 36 | 12WF45 | - | - | - | - | - | - | 102B | 751B | - | - | 2 |
| 5336 | - | 100 | 36 | 10WF45 | - | - | - | - | - | - | 26.5K | 751B | - | - | |
| 5337 | - | 100 | 36 | 10WF21 | - | - | - | - | - | - | 17.4K | 17.4K | - | - | |
| 5338 | - | 700 | 50 | 18WF45 | 9-1/2 | 1/2 | - | - | SEE SUPT. DET. | | 733B | 740 | 60 | 3/4X3 | |
| 5339 | - | 100 | 36 | 12WF45 | - | - | - | - | - | - | 26.5K | 752B | - | - | 1 |
| 5340 | - | 100 | 36 | 10WF25 | - | - | - | - | - | - | 17.4K | 753 | - | - | |
| 5341 | - | 100 | 36 | 12WF45 | - | - | - | - | - | - | 26.5K | 750A | - | - | |
| 5342 | - | 100 | 36 | 10WF21 | - | - | - | - | - | - | 17.4K | 753 | - | - | |
| 5343 | 12X12WF | 400 | 50 | 12WF79 | 10 | 1/2 | - | - | 20FT 0 | - | 751B | 101B | - | - | |
| 5344 | - | 100 | 36 | 12WF45 | - | - | - | - | - | - | 172A | 102B | - | - | |
| 5345 | - | 100 | 36 | 12WF27 | - | - | - | - | - | - | 111A | 102B | - | - | |
| 5346 | - | 100 | 36 | 10WF21 | - | - | - | - | - | - | 102B | 102B | - | - | |
| 5347 | - | 700 | 36 | 14WF34 | 8-3/4 | 1/2 | - | - | SEE SUPT. DET. | | 739 | 739 | 44 | 3/4X3 | |
| 5348 | - | 100 | 50 | 12WF92 | - | - | - | - | - | - | 47.1K | 751B | - | - | |
| 5349 | - | 100 | 36 | 8B15 | - | - | - | - | - | - | 17.4K | 753 | - | - | |
| 5350 | 18X7-1/2WF | 400 | 50 | 18WF60 | 6 | 3/4 | - | - | 26FT 0 | | 467A | 166C | 90 | 3/4X3 | |
| 5351 | - | 100 | 36 | 12B16.5 | - | - | - | - | - | - | 508 | 508 | - | - | |
| 5352 | - | 100 | 36 | 12B16.5 | - | - | - | - | - | - | 508 | 508 | - | - | |
| 5353 | - | 700 | 36 | 14WF34 | 8-3/4 | 1/2 | - | - | SEE SUPT. DET. | | 739 | 739 | 44 | 3/4X3 | |
| 5354 | - | 100 | 50 | 24WF76 | - | - | - | - | - | - | 766A | 47.1K | 58 | 3/4X3 | |
| 5355 | - | 100 | 36 | 8B13 | - | - | - | - | - | - | 508 | 17.4K | - | - | |
| 5356 | - | 100 | 36 | 12B14 | - | - | - | - | - | - | 170G | 755 | - | - | |
| 5357 | - | 100 | 36 | 8B13 | - | - | - | - | - | - | 17.4K | 753 | - | - | |
| 5358 | - | 100 | 36 | 8B13 | - | - | - | - | - | - | 170G | 755 | - | - | |
| 5359 | - | 100 | 36 | 12B19 | - | - | - | - | - | - | 508 | 508 | - | - | |
| 5360 | - | 100 | 36 | 8B13 | - | - | - | - | - | - | 526A | 527A | - | - | |
| 5361 | - | 100 | 36 | 8B13 | - | - | - | - | - | - | 527A | 526A | - | - | |
| 5362 | - | 100 | 36 | 8B13 | - | - | - | - | - | - | 753 | 526A | - | - | |
| 5363 | - | 100 | 36 | 12WF45 | - | - | - | - | - | - | 26.5K | 26.5K | - | - | |
| 5364 | - | 100 | 36 | 12WF53 | - | - | - | - | - | - | 26.5K | 26.5K | - | - | |
| 5365 | - | 700 | 36 | 16WF40 | 9 | 1/2 | - | - | SEE SUPT. DET. | | 740 | 739 | 52 | 3/4X3 | |
| 5366 | - | 100 | 36 | 12WF45 | - | - | - | - | - | - | 26.5K | 26.5K | - | - | |

REMARKS

1 USE BEAM TYPE 467 AT COL. 245 ONLY.
REVISION AFTER FABRICATION.

2 BEAM TYPE 467, REVISION AFTER FABRICATION.

* HOLD

LICENSED PROFESSIONAL ENGINEER — LESLIE E. ROBERTSON — No. 34360 — UNIVERSITY OF THE STATE OF NEW YORK

5-AB1-161

**SKILLING, HELLE, CHRISTIANSEN, ROBERTSON** — Structural & Civil Engineers

PROJECT: THE WORLD TRADE CENTER | TITLE: BEAM SCHEDULE TOWERS A AND B | DATE: 1/10/69

REVISIONS

| BEAM NO. | SIZE | TYPE | FY | SHAPE | PLATE 1 WIDTH | PLATE 1 THICK | PLATE 2 WIDTH | PLATE 2 THICK | DIMENSIONS LENGTH | DIMENSIONS DIM. A | SUPPORTS LEFT | SUPPORTS RIGHT | STUDS NO. | STUDS SIZE | REMARKS | |
|---|---|---|---|---|---|---|---|---|---|---|---|---|---|---|---|---|
| 5367 | - | 100 | 36 | 12WF53 | - | - | - | - | - | - | 26.5K | 26.5K | - | - | | |
| 5368 | - | 100 | 36 | 14WF68 | - | - | - | - | - | - | 26.5K | 164 | 74 | 3/4X3 | | |
| 5369 | - | 442 | 36 | 30WF108 | - | - | - | - | - | - | 373A | 154A | 92 | 3/4X3 | | |
| 5370 | - | 100 | 36 | 14WF68 | - | - | - | - | - | - | 164 | 26.5K | 74 | 3/4X3 | | |
| 5371 | - | 442 | 36 | 30WF108 | - | - | - | - | - | - | 154A | 373A | 92 | 3/4X3 | | |
| 5372 | - | 100 | 36 | 9CH13.4 | - | - | - | - | - | - | 17.4K | 17.4K | - | - | | X |
| 5373 | - | 100 | 36 | 10WF21 | - | - | - | - | - | - | 102B | 102B | - | - | | |
| 5374 | - | 100 | 36 | 12WF120 | - | - | - | - | - | - | 47.1K | 76OB | - | - | | |
| 5375 | - | 100 | 36 | 12WF79 | - | - | - | - | - | - | 102B | 102B | - | - | | |
| 5376 | - | 100 | 36 | 18WF45 | - | - | - | - | - | - | 26.5K | 26.5K | - | - | | |
| 5377 | - | 100 | 36 | 18WF45 | - | - | - | - | - | - | 26.5K | 26.5K | - | - | | |
| 5378 | 16X7 WF | 400 | 36 | 16WF40 | 6 | 3/4 | - | - | - | - | 26.5K | 156 | 70 | 3/4X3 | | |
| 5379 | - | 100 | 36 | 9CH13.4 | - | - | - | - | - | - | 17.4K | 17.4K | 10 | 3/4X3 | | |
| 5380 | - | 100 | 36 | 18WF45 | - | - | - | - | - | - | 26.5K | 26.5K | 42 | 3/4X3 | | |
| 5381 | - | 100 | 36 | 14WF30 | - | - | - | - | - | - | 26.5K | 26.5K | 28 | 3/4X3 | | |
| 5382 | - | 100 | 36 | 12WF27 | - | - | - | - | - | - | 26.5K | 26.5K | - | - | | |
| 5383 | 30X10-1/2WF | 400 | 50 | 30WF108 | 8 | 1-9/16 | - | - | 32FT 3 | | 230 | 151 | 192 | 3/4X3 | | 2 |
| 5384 | - | 100 | 36 | 8WF58 | - | - | - | - | - | - | 515B | 515B | 20 | 3/4X3 | | |
| 5385 | - | 100 | 36 | 8WF58 | - | - | - | - | - | - | 515B | 515C | 20 | 3/4X3 | | |
| 5386 | - | 100 | 36 | 8WF58 | - | - | - | - | - | - | 515D | 515C | 14 | 3/4X3H | | |
| 5387 | - | 100 | 36 | 8WF58 | - | - | - | - | - | - | 515D | 515B | 14 | 3/4X3H | | |
| 5388 | - | 100 | 50 | 12WF79 | - | - | - | - | - | - | 101B | 756B | - | - | | |
| 5389 | 30X10-1/2WF | 400 | 50 | 30WF108 | 8 | 1-9/16 | - | - | 32FT 3 | | 151 | 230 | 192 | 3/4X3 | | 2 |
| 5390 | - | 100 | 36 | 8WF58 | - | - | - | - | - | - | 515B | 515A | 20 | 3/4X3H | | |
| 5391 | - | 100 | 36 | 12B19 | - | - | - | - | - | - | 113A | 113B | - | - | | |
| 5392 | - | 100 | 36 | 12B19 | - | - | - | - | - | - | 508 | 113B | - | - | | |
| 5393 | - | 100 | 36 | 8B13 | - | - | - | - | - | - | 17.4K | 17.4K | - | - | | |
| 5394 | 27X10WF | 400 | 36 | 27WF84 | 8-1/2 | 1- 1/8 | - | - | 54FT 0 | | 152 | 64.0K | 105 | 3/4X3 | | 1 |
| 5395 | 27X10WF | 400 | 36 | 27WF84 | 8-3/4 | 7/8 | - | - | 54FT 0 | | 64.0K | 152 | 105 | 3/4X3 | | 1 |
| 5396 | 27X10WF | 400 | 36 | 27WF94 | 8 | 1 | - | - | 54FT 0 | | 152 | 202F | 112 | 3/4X3 | | 1 |
| 5397 | 27X10WF | 400 | 36 | 27WF94 | 8 | 1 | - | - | 54FT 0 | | 152 | 2098 | 112 | 3/4X3 | | 1 |
| 5398 | 27X10WF | 400 | 36 | 27WF94 | 8 | 1 | - | - | 54FT 0 | | 202F | 152 | 112 | 3/4X3 | | 1 |
| 5399 | 27X10WF | 400 | 36 | 27WF94 | 8 | 1 | - | - | 54FT 0 | | 202F | 152 | 112 | 3/4X3 | | 1 |

REMARKS

1 DIMENSION B 20FT 3

2 DIMENSION B 6FT 11

* HOLD

LICENSED PROFESSIONAL ENGINEER — LESLIE E. ROBERTSON — No. 34350 — STATE OF NEW YORK

5-AB1-162

**SKILLING, HELLE, CHRISTIANSEN, ROBERTSON** — **Structural & Civil Engineers**

PROJECT: THE WORLD TRADE CENTER | TITLE: BEAM SCHEDULE TOWERS A AND B | DATE: 11/22/68

REVISIONS

| BEAM NO. | SIZE | TYPE | FY | PLATE 1 SHAPE | PLATE 1 WIDTH | PLATE 1 THICK | PLATE 2 WIDTH | PLATE 2 THICK | DIMENSIONS LENGTH | DIMENSIONS DIM. A | SUPPORTS LEFT | SUPPORTS RIGHT | STUDS NO. | STUDS SIZE | REMARKS |
|---|---|---|---|---|---|---|---|---|---|---|---|---|---|---|---|
| 5400 | 27X10WF | 400 | 36 | 27WF84 | 8-3/4 | 3/8 | - | - | 54FT 6 | | 152 | 62.7K | 88 | 3/4X3 | 1 |
| 5401 | 27X10WF | 400 | 36 | 27WF84 | 8-3/4 | 3/8 | - | - | 54FT 6 | | 62.7K | 152 | 88 | 3/4X3 | 1 |
| 5402 | - | 100 | 36 | 12B19 | - | - | - | - | - | - | 26.5K | 26.5K | - | - | |
| 5403 | 27X10WF | 433 | 36 | 27WF84 | 8 | 1 -3/8 | - | - | 46FT 7 | 2FT 7 | 66.7K | 160 | 112 | 3/4X3 | 1 |
| 5404 | 27X10WF | 418 | 36 | 27WF94 | 8 | 1 | - | - | 54FT 0 | | 272 | 160 | 110 | 3/4X3 | |
| 5405 | - | 100 | 36 | 9CH13.4 | - | - | - | - | - | - | 17.4K | 17.4K | - | - | |
| 5406 | 27X10WF | 433 | 36 | 27WF94 | 8 | 1 | - | - | 46FT 7 | 2FT 7 | 272A | 160 | 110 | 3/4X3 | 1 |
| 5407 | - | 100 | 36 | 12B19 | - | - | - | - | - | - | 26.5K | 26.5K | - | - | |
| 5408 | - | 100 | 36 | 9CH13.4 | - | - | - | - | - | - | 17.4K | 17.4K | - | - | |
| 5409 | - | 100 | 36 | 9CH13.4 | - | - | - | - | - | - | 17.4K | 17.4K | - | - | |
| 5410 | - | 100 | 36 | 12B16.5 | - | - | - | - | - | - | 106 | 314 | - | - | |
| 5411 | - | 100 | 36 | 9CH13.4 | - | - | - | - | - | - | 17.4K | 17.4K | 10 | 3/4X3 | |
| 5412 | - | 100 | 36 | 9CH13.4 | - | - | - | - | - | - | 17.4K | 17.4K | - | - | |
| 5413 | - | 100 | 36 | 9CH13.4 | - | - | - | - | - | - | 17.4K | 17.4K | 10 | 3/4X3 | |
| 5414 | - | 100 | 36 | 9CH13.4 | - | - | - | - | - | - | 17.4K | 17.4K | - | - | |
| 5415 | - | 444 | 50 | 30WF108 | - | - | - | - | - | - | 167 | 324A | 92 | 3/4X3 | |
| 5416 | - | 100 | 50 | 14WF30 | - | - | - | | - | - | 169 | 26.5K | 26 | 3/4X3 | |
| 5417 | 18X7-1/2WF | 400 | 50 | 18WF45 | 6-1/2 | 3/4 | - | - | - | - | 26.5K | 26.5K | 150 | 3/4X3 | |
| 5418 | - | 100 | 50 | 14WF30 | - | - | - | - | - | - | 26.5K | 26.5K | 30 | 3/4X3 | |
| 5419 | - | 100 | 50 | 12WF27 | - | - | - | - | - | - | 26.5K | 26.5K | 30 | 3/4X3 | |
| 5420 | - | 100 | 36 | 12WF27 | - | - | - | - | - | - | 172B | 26.5K | 15 | 3/4X3 | |
| 5421 | - | 447 | 36 | 30WF99 | - | - | - | - | - | - | 64.5K | 167 | 92 | 3/4X3 | (2) |
| 5422 | - | 100 | 36 | 18WF45 | - | - | - | - | - | - | 26.5K | 168B | 50 | 3/4X3 | |
| 5423 | - | 100 | 50 | 14WF30 | - | - | - | - | - | - | 26.5K | 169 | 26 | 3/4X3 | |
| 5424 | - | 100 | 36 | 12WF27 | - | - | - | - | - | - | 26.5K | 26.5K | 30 | 3/4X3 | |
| 5425 | 18X7-1/2WF | 400 | 50 | 18WF45 | 6-1/2 | 3/4 | - | - | 27FT 0 | | 168A | 50.0K | 92 | 3/4X3 | |
| 5426 | - | 444 | 50 | 30WF108 | - | - | - | - | - | - | 324A | 167 | 92 | 3/4X3 | |
| 5427 | 18X7-1/2WF | 400 | 50 | 18WF50 | 6-1/2 | 1/2 | - | - | 27FT 0 | | 50.0K | 168A | 92 | 3/4X3 | |
| 5428 | - | 100 | 50 | 14WF30 | - | - | - | - | - | - | 26.5K | 169 | 34 | 3/4X3 | |
| 5429 | - | 100 | 50 | 30WF99 | - | - | - | - | - | - | 44.2K | 44.2K | 70 | 3/4X2 1/2 | |
| 5430 | - | 100 | 36 | 12B16.5 | - | - | - | - | - | - | 105 | 327 | - | - | |
| 5431 | - | 457 | 50 | 30WF116 | - | - | - | - | - | - | 321A | 167 | 92 | 3/4X3 | |
| 5432 | - | 100 | 50 | 8B13 | - | - | - | - | - | - | 17.4K | 17.4K | - | - | |
| 5433 | - | 100 | 50 | 8B13 | - | - | - | - | - | - | 17.4K | 17.4K | - | - | |

REMARKS

1 DIMENSION B 20FT 3

2 NO STUDS ON SIDE OF FLANGE ADJACENT TO OPENING BETWEEN COORDINATES 26'-8 3/4 AND 36'-8 1/2

LICENSED PROFESSIONAL ENGINEER — LESLIE E. ROBERTSON — No. 34360 — UNIVERSITY OF THE STATE OF NEW YORK

S-A61-163

**SKILLING-HELLE-CHRISTIANSEN-ROBERTSON** — **Civil & Structural Engineers**

PROJECT: THE WORLD TRADE CENTER | TITLE: BEAM SCHEDULE TOWERS A AND B | DATE: 1/22/68

REVISIONS

| BEAM NO. | SIZE | TYPE | FY | PLATE 1 SHAPE | PLATE 1 WIDTH | PLATE 1 THICK | PLATE 2 WIDTH | PLATE 2 THICK | DIMENSIONS LENGTH | DIMENSIONS DIM. A | SUPPORTS LEFT | SUPPORTS RIGHT | STUDS NO. | STUDS SIZE | REMARKS |
|---|---|---|---|---|---|---|---|---|---|---|---|---|---|---|---|
| 5434 | - | 100 | 50 | 16B31 | - | - | - | - | - | - | 26.5K | 26.5K | - | - | |
| 5435 | - | 100 | 50 | 12WF27 | - | - | - | - | - | - | 26.5K | 26.5K | - | - | |
| 5436 | - | 100 | 50 | 12WF27 | - | - | - | - | - | - | 26.5K | 26.5K | - | - | |
| 5437 | - | 100 | 50 | 12WF27 | - | - | - | - | - | - | 26.5K | 26.5K | - | - | |
| 5438 | - | 100 | 50 | 14B22 | - | - | - | - | - | - | 26.5K | 26.5K | - | - | |
| 5439 | 24X9WF | 100 | 50 | 24WF76 | 7-1/2 | 3/8 | - | - | 30FT 0 | | 393A | 162 | 92 | 3/4X3 | X |
| 5440 | 24X9WF | 100 | 50 | 24WF76 | 7-1/2 | 3/8 | - | - | 30FT 0 | | 202E | 162 | 92 | 3/4X3 | |
| 5441 | 24X9WF | 100 | 50 | 24WF76 | 7-1/2 | 3/8 | - | - | 30FT 0 | | 202E | 162 | 92 | 3/4X3 | |
| 5442 | 24X9WF | 100 | 50 | 24WF76 | 7-1/2 | 3/8 | - | - | 30FT 0 | | 393B | 162 | 92 | 3/4X3 | |
| 5443 | - | 100 | 50 | 10B19 | - | - | - | - | - | - | 493A | 17.4K | - | - | |
| 5444 | - | 100 | 50 | 10B17 | - | - | - | - | - | - | 493A | 17.4K | - | - | |
| 5445 | " | 100 | 50 | 16B31 | - | - | - | - | - | - | 26.5K | 26.5K | - | - | |
| 5446 | 30X15WF | 426 | 50 | 30WF172 | 13-3/4 | 1/2 | - | - | 54FT 0 | | 151.5K | 159 | 120 | 3/4X3 | |
| 5447 | - | 403 | 50 | 30WF108 | - | - | - | - | - | - | 154 | 322A | 92 | 3/4X3 | |
| 5448 | - | 403 | 50 | 30WF108 | - | - | - | - | - | - | 322A | 154 | 92 | 3/4X3 | |
| 5449 | - | 100 | 36 | 16WF36 | - | - | - | - | - | - | 161A | 26.5K | 24 | 3/4X3 | |
| 5450 | - | 100 | 50 | 27WF94 | - | - | - | - | - | - | 44.2K | 44.2K | 122 | 3/4X3 | |
| 5451 | - | 100 | 50 | 36WF135 | - | - | - | - | - | - | 53.0K | 53.0K | 174 | 3/4X3 | |
| 5452 | - | 100 | 50 | 36WF135 | - | - | - | - | - | - | 53.0K | 53.0K | 174 | 3/4X3 | |
| 5453 | 27X12WF | 401 | 36 | 27WF114 | 12 | 3/4 | - | - | - | - | 44.2K | 152 | - | - | |
| 5454 | 18X7-1/2WF | 400 | 50 | 18WF60 | 6 | 3/4 | - | - | 26FT 0 | | 467A | 166C | 92 | 3/4X3 | |
| 5455 | - | 100 | 50 | 14WF30 | - | - | - | - | - | - | 26.5K | 165 | 26 | 3/4X3 | |
| 5456 | - | 100 | 36 | 16WF36 | - | - | - | - | - | - | 161A | 28.0K | 24 | 3/4X3 | |
| 5457 | 18X7-1/2WF | 400 | 50 | 18WF60 | 6 | 3/4 | - | - | 26FT 0 | | 166C | 467A | 92 | 3/4X3 | |
| 5458 | - | 100 | 36 | 12WF27 | - | - | - | - | - | - | 26.5K | 26.5K | 30 | 3/4X3 | |
| 5459 | - | 100 | 36 | 14WF30 | - | - | - | - | - | - | 26.5K | 26.5K | 30 | 3/4X3 | |
| 5460 | - | 403 | 50 | 30WF108 | - | - | - | - | - | - | 324A | 154 | 92 | 3/4X3 | |
| 5461 | 18X7-1/2WF | 400 | 50 | 18WF60 | 6 | 3/4 | - | - | 26FT 0 | | 50.0K | 166C | 92 | 3/4X3 | |
| 5462 | - | 100 | 50 | 14WF30 | - | - | - | - | - | - | 165 | 26.5K | 26 | 3/4X3 | |
| 5463 | - | 100 | 36 | 9CH13.4 | - | - | - | - | - | - | 17.4K | 17.4K | 10 | 3/4X3 | |
| 5464 | - | 100 | 36 | 9CH13.4 | - | - | - | - | - | - | 17.4K | 17.4K | - | - | |
| 5465 | - | 100 | 36 | 12WF27 | - | - | - | - | - | - | 26.5K | 26.5K | - | - | |
| 5466 | - | 100 | 36 | 14WF30 | - | - | - | - | - | - | 26.5K | 26.5K | 30 | 3/4X3 | |

REMARKS

1 DIMENSION B = 20FT 3

LICENSED PROFESSIONAL ENGINEER — LESLIE E. ROBERTSON — No. 34360 — UNIVERSITY OF THE STATE OF NEW YORK

**SKILLING-HELLE-CHRISTIANSEN-ROBERTSON** — **Civil & Structural Engineers**

**PROJECT:** THE WORLD TRADE CENTER

**TITLE:** BEAM SCHEDULE TOWERS A AND B

**DATE:** 1/24/68

REVISIONS

| BEAM NO. | SIZE | TYPE | FY | SHAPE | PLATE 1 WIDTH | PLATE 1 THICK | PLATE 2 WIDTH | PLATE 2 THICK | STIFFENERS LENGTH | STIFFENERS DIM. A | WEB LEFT | WEB RIGHT | FLANGE NO. | FLANGE SIZE | REMARKS |
|---|---|---|---|---|---|---|---|---|---|---|---|---|---|---|---|
| 5467 | - | 403 | 50 | 30WF108 | - | - | - | - | - | - | 154 | 231A | 164 | 3/4X3 | |
| 5468 | 18X7-1/2WF | 400 | 50 | 18WF60 | 6 | 3/4 | - | - | 26FT 0 | | 166C | 50.0K | 92 | 3/4X3 | |
| 5469 | - | 100 | 36 | 9CH13.4 | - | - | - | - | - | - | 17.4K | 17.4K | 10 | 3/4X3 | |
| 5470 | - | 100 | 36 | 12WF27 | - | - | - | - | - | - | 26.5K | 26.5K | - | - | |
| 5471 | - | 100 | 50 | 14WF30 | - | - | - | - | - | - | 164 | 26.5K | 26 | 3/4X3 | |
| 5472 | - | 100 | 36 | 16WF40 | - | - | - | - | - | - | 26.5K | 26.5K | - | - | |
| 5473 | - | 403 | 50 | 30WF108 | - | - | - | - | - | - | 154A | 231A | 164 | 3/4X3 | |
| 5474 | - | 100 | 36 | 12B16.5 | - | - | - | - | - | - | 26.5K | 26.5K | - | - | |
| 5475 | - | 100 | 50 | 18WF45 | - | - | - | - | - | - | 50.0K | 166D | 68 | 3/4X3 | |
| 5476 | - | 100 | 36 | 12WF27 | - | - | - | - | - | - | 26.5K | 26.5K | - | - | |
| 5477 | - | 100 | 36 | 8B13 | - | - | - | - | - | - | 17.4K | 17.4K | - | - | |
| 5478 | - | 100 | 50 | 14WF30 | - | - | - | - | - | - | 164 | 26.5K | 26 | 3/4X3 | |
| 5479 | - | 100 | 36 | 30WF99 | - | - | - | - | - | - | 50.0K | 50.0K | - | - | |
| 5480 | - | 443 | 50 | 30WF99 | - | - | - | - | - | - | 154 | 63.0K | 150 | 3/4X3 | |
| 5481 | - | 443 | 50 | 30WF99 | - | - | - | - | - | - | 154 | 63.0K | 150 | 3/4X3 | |
| 5482 | - | 442 | 50 | 30WF108 | - | - | - | - | - | - | 154 | 231A | 164 | 3/4X3 | |
| 5483 | - | 100 | 36 | 9CH13.4 | - | - | - | - | - | - | 17.4K | 17.4K | 10 | 3/4X3 | |
| 5484 | - | 100 | 36 | 12WF27 | - | - | - | - | - | - | 26.5K | 26.5K | - | - | |
| 5485 | - | 100 | 50 | 14WF30 | - | - | - | - | - | - | 26.5K | 164 | 26 | 3/4X3 | |
| 5486 | - | 100 | 36 | 16WF40 | - | - | - | - | - | - | 26.5K | 26.5K | - | - | |
| 5487 | - | 100 | 36 | 9CH13.4 | - | - | - | - | - | - | 17.4K | 17.4K | - | - | |
| 5488 | - | 403 | 50 | 30WF108 | - | - | - | - | - | - | 231A | 154A | 164 | 3/4X3 | |
| 5489 | - | 100 | 36 | 8B13 | - | - | - | - | - | - | 17.4K | 17.4K | 12 | 3/4X3 | |
| 5490 | - | 100 | 36 | 16WF36 | - | - | - | - | - | - | 161A | 29.8K | 29 | 3/4X3 | |
| 5491 | - | 100 | 36 | 12WF27 | - | - | - | - | - | - | 26.5K | 26.5K | - | - | |
| 5492 | - | 100 | 50 | 14WF30 | - | - | - | - | - | - | 26.5K | 164 | 34 | 3/4X3 | |
| 5493 | 18X7-1/2WF | 400 | 50 | 18WF45 | 6-1/2 | 7/8 | - | - | 26FT 0 | | 54.1K | 166A | 56 | 3/4X3 | |
| 5494 | - | 100 | 50 | 18WF45 | - | - | - | - | - | - | 40.0K | 166B | 168 | 3/4X3 | |
| 5495 | - | 443 | 50 | 30WF99 | - | - | - | - | - | - | 63.0K | 154A | 150 | 3/4X3 | |
| 5496 | - | 100 | 36 | 12B19 | - | - | - | - | - | - | 26.5K | 26.5K | - | - | |
| 5497 | - | 100 | 36 | 16B26 | - | - | - | - | - | - | 456A | 462A | - | - | |
| 5498 | - | 100 | 36 | 12B19 | - | - | - | - | - | - | 26.5K | 26.5K | - | - | |
| 5499 | - | 100 | 36 | 14B22 | - | - | - | - | - | - | 170C | 455B | - | - | |

LICENSED PROFESSIONAL ENGINEER — LESLIE E. ROBERTSON — No. 34360 — STATE OF NEW YORK

**SKILLING, HELLE, CHRISTIANSEN, ROBERTSON** — Structural & Civil Engineers

PROJECT: THE WORLD TRADE CENTER | TITLE: BEAM SCHEDULE TOWERS A AND B | DATE: 11/22/68

REVISIONS

| BEAM NO. | SIZE | TYPE | FY | PLATE 1 SHAPE | PLATE 1 WIDTH | PLATE 1 THICK | PLATE 2 WIDTH | PLATE 2 THICK | DIMENSIONS LENGTH | DIMENSIONS DIM. A | SUPPORTS LEFT | SUPPORTS RIGHT | STUDS NO. | STUDS SIZE | REMARKS |
|---|---|---|---|---|---|---|---|---|---|---|---|---|---|---|---|
| 5500 | - | 100 | 36 | 27WF102 | - | - | - | - | - | - | 152 | 66.3K | 95 | 3/4X3 | |
| 5501 | 27X10WF | 430 | 36 | 27WF84 | 8 | 1- 3/8 | - | - | 54FT 0 | | 160 | 66.7K | 112 | 3/4X3 | 1 |
| 5502 | 27X10WF | 428 | 36 | 27WF84 | 8 | 1- 3/8 | - | - | 54FT 0 | | 66.7K | 160 | 112 | 3/4X3 | 1 |
| 5503 | 27X10WF | 427 | 36 | 27WF84 | 8 | 1- 3/8 | - | - | 54FT 0 | | 66.7K | 160 | 112 | 3/4X3 | 1 |
| 5504 | 27X10WF | 427 | 36 | 27WF84 | 8 | 1- 3/8 | - | - | 54FT 0 | | 160 | 66.7K | 112 | 3/4X3 | 1 |
| 5505 | - | 100 | 36 | 27WF94 | - | - | - | - | - | - | 220 | 220 | - | - | |
| 5506 | 27X10WF | 400 | 36 | 27WF84 | 8-3/4 | 7/8 | - | - | 54FT 0 | | 152 | 62.0K | 88 | 3/4X3 | 1 |
| 5507 | 27X10WF | 400 | 36 | 27WF84 | 8-3/4 | 7/8 | - | - | 54FT 0 | | 152 | 64.2K | 105 | 3/4X3 | 1 |
| 5508 | 27X10WF | 431 | 36 | 27WF84 | 8 | 1- 3/8 | - | - | 54FT 0 | | 160 | 66.7K | 112 | 3/4X3 | 1 |
| 5509 | 27X10WF | 429 | 36 | 27WF84 | 8 | 1- 3/8 | - | - | 54FT 0 | | 66.7K | 160 | 112 | 3/4X3 | 1 |
| 5510 | 27X14WF | 453 | 36 | 27WF145 | 12-3/4 | 1/2 | - | - | 32FT 3 | | 237B | 152 | 180 | 3/4X3 | 2 |
| 5511 | - | 100 | 50 | 12B19 | - | - | - | - | - | - | 26.5K | 26.5K | 30 | 3/4X3 | |
| 5512 | - | 100 | 36 | 10WF21 | - | - | - | - | - | - | 26.5K | 26.5K | 15 | 3/4X3 | |
| 5513 | - | 100 | 50 | 12B19 | - | - | - | - | - | - | 26.5K | 26.5K | - | - | |
| 5514 | - | 100 | 36 | 8B13 | - | - | - | - | - | - | 455B | 17.4K | - | - | |
| 5515 | - | 100 | 36 | 14B22 | - | - | - | - | - | - | 26.5K | 26.5K | 30 | 3/4X3 | |
| 5516 | - | 100 | 50 | 16B26 | - | - | - | - | - | - | 26.5K | 26.5K | 30 | 3/4X3 | |
| 5517 | - | 100 | 50 | 12B19 | - | - | - | - | - | - | 26.5K | 26.5K | 30 | 3/4X3 | |
| 5518 | - | 100 | 50 | 18WF45 | - | - | - | - | - | - | 166D | 40.0K | 68 | 3/4X3 | |
| 5519 | 27X10WF | 400 | 50 | 27WF84 | 9 | 1 | - | - | 30FT 0 | - | 202D | 162 | 106 | 3/4X3 | |
| 5520 | - | 100 | 36 | 27WF102 | - | - | - | - | - | - | 66.3K | 152 | 95 | 3/4X3 | |
| 5521 | 27X10WF | 432 | 36 | 27WF84 | 8 | 1- 3/8 | - | - | 44FT 7 | 2FT 7 | 160 | 66.7K | 112 | 3/4X3 | 1 |
| 5522 | 27X10WF | 400 | 50 | 27WF84 | 9 | 1 | - | - | 30FT 0 | - | 202D | 162 | 106 | 3/4X3 | |
| 5523 | - | 100 | 36 | 12B16.5 | - | - | - | - | - | - | 26.5K | 26.5K | - | - | |
| 5524 | - | 100 | 36 | 16WF36 | - | - | - | - | - | - | 26.5K | 156 | - | - | |
| 5525 | - | 100 | 36 | 16WF36 | - | - | - | - | - | - | 26.5K | 156 | 35 | 3/4X3 | |
| 5526 | - | 100 | 36 | 16WF36 | - | - | - | - | - | - | 156B | 26.5K | 24 | 3/4X3 | |
| 5527 | - | 100 | 36 | 16WF36 | - | - | - | - | - | - | 156A | 26.5K | 24 | 3/4X3 | |
| 5528 | - | 100 | 36 | 16WF36 | - | - | - | - | - | - | 156B | 26.5K | 24 | 3/4X3 | |
| 5529 | - | 100 | 36 | 12WF27 | - | - | - | - | - | - | 26.5K | 26.5K | - | - | |
| 5530 | - | 100 | 36 | 16WF36 | - | - | - | - | - | - | 156A | 29.8K | 29 | 3/4X3 | |
| 5531 | - | 100 | 36 | 16WF36 | - | - | - | - | - | - | 28.0K | 161A | 24 | 3/4X3 | |
| 5532 | - | 100 | 36 | 16WF36 | - | - | - | - | - | - | 28.3K | 161A | 29 | 3/4X3 | |
| 5533 | - | 100 | 36 | 14WF30 | - | - | - | - | - | - | 26.5K | 26.5K | - | - | |

REMARKS

1 DIMENSION B 20FT 3
2 DIMENSION B 6FT 11

LICENSED PROFESSIONAL ENGINEER — LESLIE E. ROBERTSON — No. 34360 — UNIVERSITY OF THE STATE OF NEW YORK

**SKILLING, HELLE, CHRISTIANSEN, ROBERTSON** — Structural & Civil Engineers

PROJECT: THE WORLD TRADE CENTER | TITLE: BEAM SCHEDULE TOWERS A AND B | DATE: 12/ 6/66

REVISIONS

| BEAM NO. | SIZE | TYPE | FY | PLATE 1 SHAPE | PLATE 1 WIDTH | PLATE 1 THICK | PLATE 2 WIDTH | PLATE 2 THICK | DIMENSIONS LENGTH | DIMENSIONS DIM. A | SUPPORTS LEFT | SUPPORTS RIGHT | STUDS NO. | STUDS SIZE | REMARKS |
|---|---|---|---|---|---|---|---|---|---|---|---|---|---|---|---|
| 5534 | - | 100 | 36 | 14WF30 | - | - | - | - | - | - | 26.5K | 26.5K | - | - | |
| 5535 | - | 100 | 36 | 8B13 | - | - | - | - | - | - | 17.4K | 163 | 14 | 3/4X3 | |
| 5536 | 27X14WF | 453 | 36 | 27WF145 | 12-3/4 | 1-1/2 | - | - | 32FT 0 | | 152 | 237A | 194 | 3/4X3 | 2 |
| 5537 | 30X15WF | 400 | 50 | 30WF172 | 13-3/4 | 1/2 | - | - | 54FT 0 | | 151 | 131.5K | 120 | 3/4X3 | 1 |
| 5538 | 27X10WF | 400 | 36 | 27WF94 | 8 | 1-3/8 | - | - | 54FT 0 | | 152 | 67.0K | 112 | 3/4X3 | 1 |
| 5539 | 27X10WF | 400 | 36 | 27WF84 | 8 | 1-3/8 | - | - | 54FT 0 | | 152 | 66.7K | 112 | 3/4X3 | 1 |
| 5540 | 30X15WF | 400 | 50 | 30WF99 | 9-1/4 | 3/8 | - | - | 54FT 0 | | 151 | 84.3K | 112 | 3/4X3 | 1 |
| 5541 | 33X16WF | 400 | 36 | 33WF200 | 14-1/4 | 1-3/4 | - | - | 54FT 0 | | 150 | 99.6K | 112 | 3/4X3 | 1 |
| 5542 | 27X10WF | 400 | 36 | 27WF94 | 8 | 1-3/8 | - | - | 54FT 0 | | 152 | 68.7K | 112 | 3/4X3 | 1 |
| 5543 | 33X16WF | 400 | 36 | 33WF200 | 14-1/4 | 1-3/4 | - | - | 54FT 0 | | 150 | 335L | 112 | 3/4X3 | 1 |
| 5544 | - | 100 | 36 | 10WF21 | - | - | - | - | - | - | 17.4K | 17.4K | - | - | |
| 5545 | - | 100 | 36 | 16WF36 | - | - | - | - | - | - | 26.5K | 156A | 24 | 3/4X3 | |
| 5546 | - | 100 | 36 | 16WF36 | - | - | - | - | - | - | 26.5K | 156A | 24 | 3/4X3 | |
| 5547 | - | 100 | 36 | 16WF36 | - | - | - | - | - | - | 26.5K | 156B | 24 | 3/4X3 | |
| 5548 | 30X15WF | 400 | 50 | 30WF172 | 13-3/4 | 1/2 | - | - | 54FT 0 | | 131.5K | 151 | 120 | 3/4X3 | 1 |
| 5549 | 27X10WF | 400 | 36 | 27WF94 | 8 | 1-3/8 | - | - | 54FT 0 | | 67.0K | 152 | 112 | 3/4X3 | 1 |
| 5550 | 27X10WF | 400 | 36 | 27WF84 | 8 | 1-3/8 | - | - | 54FT 0 | | 66.7K | 152 | 112 | 3/4X3 | 1 |
| 5551 | 27X10WF | 400 | 36 | 27WF94 | 8 | 1 | - | - | 54FT 0 | | 219A | 152 | 112 | 3/4X3 | 1 |
| 5552 | 33X16WF | 400 | 36 | 33WF200 | 14-1/4 | 1-3/4 | - | - | 54FT 0 | | 219B | 150 | 112 | 3/4X3 | 1 |
| 5553 | 27X10WF | 400 | 36 | 27WF94 | 8 | 1-3/8 | - | - | 54FT 0 | | 68.7K | 152 | 112 | 3/4X3 | 1 |
| 5554 | 33X16WF | 400 | 36 | 33WF200 | 14-1/4 | 1-3/4 | - | - | 54FT 0 | | 99.6K | 150 | 112 | 3/4X3 | 1 |
| 5555 | 30X15WF | 400 | 50 | 30WF99 | 9-1/4 | 3/8 | - | - | 54FT 0 | | 84.3K | 151 | 112 | 3/4X3 | 1 |
| 5556 | - | 100 | 36 | 14WF30 | - | - | - | - | - | - | 26.5K | 26.5K | - | - | |
| 5557 | - | 100 | 36 | 10WF21 | - | - | - | - | - | - | 17.4K | 760A | - | - | |
| 5558 | - | 100 | 36 | 10WF21 | - | - | - | - | - | - | 17.4K | 761A | - | - | |
| 5559 | - | 100 | 36 | 8B15 | - | - | - | - | - | - | 17.4K | 759 | - | - | |
| 5560 | - | 100 | 36 | 14WF30 | - | - | - | - | - | - | 26.5K | 26.5K | - | - | |
| 5561 | 30X10-1/2WF | 453 | 50 | 30WF108 | 8 | 1-9/16 | - | - | 32FT 3 | | 151 | 320A | 124 | 3/4X3 | 2 |
| 5562 | 30X10-1/2WF | 453 | 50 | 30WF108 | 8 | 1-9/16 | - | - | 32FT 3 | | 320A | 151 | 124 | 3/4X3 | 2 |
| 5563 | - | 100 | 36 | 12WF27 | - | - | - | - | - | - | 26.5K | 26.5K | - | - | |
| 5564 | 30X10-1/2WF | 453 | 50 | 30WF108 | 8 | 1-9/16 | - | - | 32FT 3 | | 151 | 318A | 124 | 3/4X3 | 2 |
| 5565 | 16X8-1/2WF | 400 | 36 | 16WF58 | 7-1/2 | 7/16 | - | - | 32FT 3 | | 156A | 39.6K | 62 | 3/4X3 | |
| 5566 | 30X10-1/2WF | 453 | 50 | 30WF108 | 8 | 1-9/16 | - | - | 32FT 3 | | 318A | 151 | 124 | 3/4X3 | 2 |

REMARKS

1 DIMENSION B 20FT 3

2 DIMENSION B 6FT 11

LICENSED PROFESSIONAL ENGINEER — LESLIE E. ROBERTSON — No. 54240 — STATE OF NEW YORK — UNIVERSITY OF THE STATE OF NEW YORK

7-21-67

**SKILLING-HELLE-CHRISTIANSEN-ROBERTSON** — **Civil & Structural Engineers**

PROJECT: THE WORLD TRADE CENTER | TITLE: BEAD SCHEDULE TOWERS A AND B | DATE: 1/22/68

REVISIONS

| BEAM NO. | SIZE | TYPE | FY | SHAPE | PLATE 1 WIDTH | PLATE 1 THICK | PLATE 2 WIDTH | PLATE 2 THICK | DIMENSIONS LENGTH | DIMENSIONS DIM. A | SUPPORTS LEFT | SUPPORTS RIGHT | STUDS NO. | STUDS SIZE | REMARKS |
|---|---|---|---|---|---|---|---|---|---|---|---|---|---|---|---|
| 5567 | 16X8-1/2WF | 400 | 36 | 16WF58 | 7-1/2 | 7/16 | - | - | 32FT 3 | | 39.6K | 156A | 62 | 3/4X3 | |
| 5568 | - | 100 | 50 | 12WF99 | - | - | - | - | - | - | 751B | 47.1K | - | - | |
| 5569 | - | 100 | 36 | 16WF36 | - | - | - | - | - | - | 26.5K | 161A | 24 | 3/4X3 | |
| 5570 | - | 100 | 50 | 33WF130 | - | - | - | - | - | - | 53.0K | 53.0K | 196 | 3/4X3 | |
| 5571 | - | 100 | 50 | 33WF118 | - | - | - | - | - | - | 53.0K | 53.0K | 178 | 3/4X3 | |
| 5572 | - | 100 | 50 | 30WF116 | - | - | - | - | - | - | 44.2K | 44.2K | 176 | 3/4X3 | |
| 5573 | - | 100 | 50 | 30WF99 | - | - | - | - | - | - | 44.2K | 44.2K | 150 | 3/4X3 | |
| 5574 | - | 100 | 50 | 30WF99 | - | - | - | - | - | - | 44.2K | 44.2K | 150 | 3/4X3 | |
| 5575 | - | 100 | 50 | 27WF94 | - | - | - | - | - | - | 44.2K | 44.2K | 122 | 3/4X3 | |
| 5576 | 16X8-1/2WF | 400 | 36 | 16WF58 | 7-1/2 | 7/16 | - | - | 32FT 3 | | 39.6K | 161 | 62 | 3/4X3 | |
| 5577 | - | 100 | 36 | 14WF34 | - | - | - | - | - | - | 26.5K | 157 | 31 | 3/4X3 | |
| 5578 | - | 100 | 36 | 14WF34 | - | - | - | - | - | - | 157 | 26.5K | 31 | 3/4X3 | |
| 5579 | - | 100 | 50 | 12WF92 | - | - | - | - | - | - | 47.1K | 760B | - | - | |
| 5580 | - | 100 | 50 | 12WF99 | - | - | - | - | - | - | 752B | 47.1K | - | - | |
| 5581 | - | 100 | 36 | 10WF21 | - | - | - | - | - | - | 17.4K | 17.4K | - | - | |
| 5582 | - | 100 | 36 | 16WF36 | - | - | - | - | - | - | 28.3K | 156A | 29 | 3/4X3 | |
| 5583 | - | 100 | 36 | 10WF21 | - | - | - | - | - | - | 17.4K | 17.4K | - | - | |
| 5584 | 16X8-1/2WF | 400 | 36 | 16WF58 | 7-1/2 | 7/16 | - | - | 30FT 9 | | 161 | 39.6K | 62 | 3/4X3 | |
| 5585 | - | 403 | 50 | 30WF108 | - | - | - | - | - | - | 324A | 154A | 164 | 3/4X3 | |
| 5586 | - | 403 | 50 | 30WF108 | - | - | - | - | - | - | 154A | 324A | 164 | 3/4X3 | |
| 5587 | - | 442 | 50 | 30WF108 | - | - | - | - | - | - | 324A | 154A | 164 | 3/4X3 | |
| 5588 | - | 442 | 50 | 30WF108 | - | - | - | - | - | - | 154 | 324A | 164 | 3/4X3 | |
| 5589 | - | 100 | 50 | 30WF99 | - | - | - | - | - | - | 44.2K | 44.2K | 128 | 3/4X3 | |
| 5590 | - | 100 | 50 | 30WF99 | - | - | - | - | - | - | 44.2K | 44.2K | 128 | 3/4X3 | |
| 5591 | - | 100 | 50 | 27WF94 | - | - | - | - | - | - | 44.2K | 44.2K | 122 | 3/4X3 | |
| 5592 | - | 100 | 50 | 27WF94 | - | - | - | - | - | - | 44.2K | 44.2K | 122 | 3/4X3 | |
| 5593 | - | 100 | 36 | 10WF21 | - | - | - | - | - | - | 17.4K | 17.4K | - | - | |
| 5594 | - | 100 | 50 | 12WF79 | - | - | - | - | - | - | 760B | 47.1K | - | - | |
| 5595 | - | 100 | 50 | 12WF79 | - | - | - | - | - | - | 761B | 47.1K | - | - | |
| 5596 | - | 100 | 50 | 12WF106 | - | - | - | - | - | - | 760B | 47.1K | - | - | |
| 5597 | - | 100 | 50 | 12WF106 | - | - | - | - | - | - | 761B | 47.1K | - | - | |
| 5598 | - | 100 | 50 | 12WF85 | - | - | - | - | - | - | 47.1K | 761B | - | - | |
| 5599 | - | 100 | 36 | 12B19 | - | - | - | - | - | - | 26.5K | 26.5K | - | - | |

LICENSED PROFESSIONAL ENGINEER — LESLIE E. ROBERTSON — No. 34360 — UNIVERSITY OF THE STATE

**SKILLING, HELLE, CHRISTIANSEN, ROBERTSON** — Structural & Civil Engineers

PROJECT: THE WORLD TRADE CENTER | TITLE: BEAM SCHEDULE TOWERS A AND B | DATE: 12/ 6/68

REVISIONS

| BEAM NO. | SIZE | TYPE | FY | SHAPE | PLATE 1 WIDTH | PLATE 1 THICK | PLATE 2 WIDTH | PLATE 2 THICK | DIMENSIONS LENGTH | DIMENSIONS DIM. A | SUPPORTS LEFT | SUPPORTS RIGHT | STUDS NO. | STUDS SIZE | REMARK. |
|---|---|---|---|---|---|---|---|---|---|---|---|---|---|---|---|
| 5600 | - | 100 | 50 | 12WF120 | - | - | - | - | - | - | 102B | 172A | - | - | |
| 5601 | - | 100 | 36 | 8B15 | - | - | - | - | - | - | 765 | 17.4K | - | - | |
| 5602 | - | 100 | 36 | 10WF21 | - | - | - | - | - | - | 760A | 17.4K | - | - | |
| 5603 | - | 100 | 36 | 10WF21 | - | - | - | - | - | - | 761A | 17.4K | - | - | |
| 5604 | - | 100 | 36 | 10WF21 | - | - | - | - | - | - | 760A | 102B | - | - | |
| 5605 | - | 100 | 50 | 12WF106 | - | - | - | - | - | - | 760B | 70.7K | - | - | X |
| 5606 | - | 100 | 50 | 12WF65 | - | - | - | - | - | - | 761B | 54.1K | - | - | |
| 5607 | - | 100 | 50 | 12WF120 | - | - | - | - | - | - | 172A | 102B | - | - | |
| 5608 | - | 100 | 50 | 10WF25 | - | - | - | - | - | - | 102B | 760A | - | - | (1) |
| 5609 | - | 100 | 50 | 12WF85 | - | - | - | - | - | - | 760B | 101D | - | - | |
| 5611 | - | 100 | 50 | 12WF92 | - | - | - | - | - | - | 54.1K | 760B | - | - | |
| 5612 | - | 100 | 50 | 12WF92 | - | - | - | - | - | - | 101B | 760B | - | - | |
| 5613 | - | 100 | 50 | 12WF53 | - | - | - | - | - | - | 760B | 54.1K | - | - | |
| 5614 | - | 100 | 50 | 12WF65 | - | - | - | - | - | - | 760B | 101B | - | - | |
| 5615 | - | 100 | 50 | 12WF72 | - | - | - | - | - | - | 760B | 101B | - | - | |
| 5616 | - | 100 | 50 | 12WF72 | - | - | - | - | - | - | 760B | 54.1K | - | - | |
| 5617 | - | 100 | 50 | 12WF65 | - | - | - | - | - | - | 761B | 54.1K | - | - | |
| 5618 | - | 100 | 50 | 12WF65 | - | - | - | - | - | - | 760B | 54.1K | - | - | |
| 5619 | - | 100 | 50 | 12WF53 | - | - | - | - | - | - | 761B | 54.1K | - | - | |
| 5620 | - | 100 | 36 | 12WF53 | - | - | - | - | - | - | 760B | 101B | - | - | |
| 5621 | - | 100 | 50 | 12WF79 | - | - | - | - | - | - | 102B | 102B | - | - | |
| 5622 | - | 100 | 50 | 12WF92 | - | - | - | - | - | - | 102B | 102B | - | - | |
| 5623 | - | 100 | 50 | 12WF79 | - | - | - | - | - | - | 47.1K | 761B | | | |
| 5624 | - | 100 | 50 | 12WF79 | - | - | - | - | - | - | 47.1K | 760B | - | - | |
| 5625 | - | 100 | 50 | 12WF53 | - | - | - | - | - | - | 54.1K | 760B | - | - | |
| 5626 | - | 100 | 50 | 12WF53 | - | - | - | - | - | - | 101B | 760B | - | - | |
| 5627 | - | 100 | 50 | 12WF79 | - | - | - | - | - | - | 101B | 760B | - | - | |
| 5628 | - | 100 | 50 | 12WF85 | - | - | - | - | - | - | 101B | 760B | - | - | |
| 5629 | - | 100 | 50 | 12WF79 | - | - | - | - | - | - | 54.1K | 761B | - | - | |
| 5630 | - | 100 | 50 | 12WF53 | - | - | - | - | - | - | 54.1K | 761B | - | - | |
| 5631 | - | 100 | 36 | 10B15 | - | - | - | - | - | - | 765 | 17.4K | 14 | 3/4X8 | |
| 5632 | - | 100 | 36 | 10B15 | - | - | - | - | - | - | 17.4K | 765 | 14 | 3/4X8 | |

REMARKS

1 FOR TOWER B, FLOOR ELEV. 294, AT COL. 218, USE FY=36

LICENSED PROFESSIONAL ENGINEER — LESLIE E. ROBERTSON — No. 34250 — STATE OF NEW YORK

SKILLING-HELLE-CHRISTIANSEN-ROBERTSON — Civil & Structural Engineers

PROJECT: THE WORLD TRADE CENTER | TITLE: BEAM SCHEDULE TOWERS A AND B | DATE: 10/18/68

REVISIONS

| BEAM NO. | SIZE | TYPE | FY | SHAPE | PLATE 1 WIDTH | PLATE 1 THICK | PLATE 2 WIDTH | PLATE 2 THICK | DIMENSIONS LENGTH | DIMENSIONS DIM. A | SUPPORTS LEFT | SUPPORTS RIGHT | STUDS NO. | STUDS SIZE | REMARKS |
|---|---|---|---|---|---|---|---|---|---|---|---|---|---|---|---|
| 5634 | - | 100 | 36 | 8B13 | - | - | - | - | - | - | 54.1K | 759 | - | - | |
| 5635 | - | 100 | 36 | 8B15 | - | - | - | - | - | - | 758 | 17.4K | - | - | |
| 5636 | - | 100 | 36 | 8B15 | - | - | - | - | - | - | 17.4K | 758 | - | - | |
| 5637 | - | 100 | 36 | 8B15 | - | - | - | - | - | - | 758 | 17.4K | - | - | |
| 5638 | - | 100 | 36 | 10WF21 | - | - | - | - | - | - | 757A | 17.4K | - | - | |
| 5639 | - | 100 | 36 | 10WF21 | - | - | - | - | - | - | 756A | 17.4K | - | - | |
| 5640 | - | 100 | 36 | 10WF21 | - | - | - | - | - | - | 756A | 102B | - | - | |
| 5641 | - | 100 | 36 | 12WF27 | - | - | - | - | - | - | 26.5K | 758 | - | - | |
| 5642 | - | 100 | 36 | 12WF27 | - | - | - | - | - | - | 26.5K | 756A | - | - | |
| 5643 | - | 100 | 36 | 10WF21 | - | - | - | - | - | - | 17.4K | 756A | - | - | |
| 5644 | - | 100 | 36 | 10WF21 | - | - | - | - | - | - | 102B | 756A | - | - | |
| 5645 | - | 100 | 50 | 12WF58 | - | - | - | - | - | - | 757B | 54.1K | - | - | |
| 5646 | - | 100 | 50 | 12WF58 | - | - | - | - | - | - | 756B | 54.1K | - | - | |
| 5647 | - | 100 | 50 | 12WF58 | - | - | - | - | - | - | 756B | 101B | - | - | |
| 5648 | - | 100 | 50 | 12WF58 | - | - | - | - | - | - | 101B | 101B | - | - | |
| 5649 | - | 100 | 50 | 12WF58 | - | - | - | - | - | - | 54.1K | 54.1K | - | - | |
| 5650 | - | 100 | 50 | 12WF58 | - | - | - | - | - | - | 101B | 54.1K | - | - | |
| 5651 | - | 100 | 50 | 12WF50 | - | - | - | - | - | - | 54.1K | 54.1K | - | - | |
| 5652 | - | 100 | 50 | 12WF50 | - | - | - | - | - | - | 101B | 54.1K | - | - | |
| 5653 | - | 100 | 36 | 10WF21 | - | - | - | - | - | - | 17.4K | 757A | - | - | |
| 5654 | - | 100 | 50 | 12WF79 | - | - | - | - | - | - | 102B | 102B | - | - | |
| 5655 | - | 100 | 50 | 12WF120 | - | - | - | - | - | - | 102B | 172A | - | - | |
| 5656 | - | 100 | 36 | 14B22 | - | - | - | - | - | - | 26.5K | 26.5K | - | - | |
| 5657 | - | 100 | 36 | 27WF102 | - | - | - | - | - | - | 230 | 152 | | 3/4X3 | |
| 5658 | - | 100 | 50 | 12WF58 | - | - | - | - | - | - | 101B | 756B | - | - | |
| 5659 | - | 100 | 50 | 12WF58 | - | - | - | - | - | - | 54.1K | 756B | - | - | |
| 5660 | - | 100 | 50 | 12WF65 | - | - | - | - | - | - | 101B | 756B | - | - | |
| 5661 | - | 100 | 50 | 12WF58 | - | - | - | - | - | - | 101B | 101B | - | - | |
| 5662 | - | 100 | 50 | 12WF58 | - | - | - | - | - | - | 54.1K | 54.1K | - | - | |
| 5663 | - | 100 | 50 | 12WF58 | - | - | - | - | - | - | 54.1K | 101B | - | - | |
| 5664 | - | 100 | 50 | 12WF50 | - | - | - | - | - | - | 54.1K | 54.1K | - | - | |
| 5665 | - | 100 | 50 | 12WF50 | - | - | - | - | - | - | 54.1K | 101B | - | - | |
| 5666 | - | 100 | 50 | 12WF120 | - | - | - | - | - | - | 102B | 172A | - | - | |

LESLIE E. ROBERTSON — LICENSED PROFESSIONAL ENGINEER — No. 39360 — UNIVERSITY OF THE STATE OF NEW YORK

5-4b1-170

**SKILLING, HELLE, CHRISTIANSEN, ROBERTSON** — **Structural & Civil Engineers**

PROJECT: THE WORLD TRADE CENTER | TITLE: BEAM SCHEDULE TOWERS A AND B | DATE: 12/ 6/68

REVISIONS

| BEAM NO. | SIZE | TYPE | FY | SHAPE | PLATE 1 WIDTH | PLATE 1 THICK | PLATE 2 WIDTH | PLATE 2 THICK | DIMENSIONS LENGTH | DIMENSIONS DIM. A | SUPPORTS LEFT | SUPPORTS RIGHT | STUDS NO. | STUDS SIZE | REMARKS |
|---|---|---|---|---|---|---|---|---|---|---|---|---|---|---|---|
| 5667 | - | 100 | 50 | 12WF120 | - | - | - | - | - | - | 172A | 102B | - | - | |
| 5668 | - | 100 | 50 | 12WF92 | - | - | - | - | - | - | 102B | 102B | - | - | |
| 5669 | - | 100 | 50 | 12WF79 | - | - | - | - | - | - | 102B | 102B | - | - | |
| 5670 | - | 100 | 50 | 12WF79 | - | - | - | - | - | - | 54.1K | 757B | - | - | |
| 5671 | - | 100 | 50 | 12WF79 | - | - | - | - | - | - | 54.1K | 756B | - | - | |
| 5672 | - | 100 | 36 | 8B15 | - | - | - | - | - | - | 753 | 17.4K | - | - | X |
| 5673 | - | 100 | 36 | 8B15 | - | - | - | - | - | - | 753 | 17.4K | - | - | |
| 5674 | - | 100 | 36 | 10WF21 | - | - | - | - | - | - | 750A | 17.4K | - | - | |
| 5675 | - | 100 | 36 | 10WF21 | - | - | - | - | - | - | 751A | 17.4K | - | - | |
| 5676 | - | 100 | 36 | 10WF21 | - | - | - | - | - | - | 751A | 102B | - | - | |
| 5677 | - | 100 | 36 | 8B15 | - | - | - | - | - | - | 17.4K | 753 | - | - | |
| 5678 | - | 100 | 36 | 8B13 | - | - | - | - | - | - | 17.4K | 17.4K | - | - | |
| 5679 | - | 100 | 36 | 10WF25 | - | - | - | - | - | - | 17.4K | 750A | - | - | |
| 5680 | - | 100 | 36 | 10WF21 | - | - | - | - | - | - | 17.4K | 752A | - | - | |
| 5681 | - | 100 | 36 | 10WF21 | - | - | - | - | - | - | 102B | 751A | - | - | |
| 5682 | - | 100 | 50 | 12WF79 | - | - | - | - | - | - | 750B | 101B | - | - | |
| 5683 | - | 100 | 50 | 12WF72 | - | - | - | - | - | - | 751B | 47.1K | - | - | |
| 5684 | - | 100 | 50 | 12WF72 | - | - | - | - | - | - | 752B | 101B | - | - | |
| 5685 | - | 100 | 50 | 12WF79 | - | - | - | - | - | - | 101B | 101B | - | - | |
| 5686 | - | 100 | 50 | 12WF72 | - | - | - | - | - | - | 54.1K | 54.1K | - | - | |
| 5687 | - | 100 | 50 | 12WF72 | - | - | - | - | - | - | 101B | 54.1K | - | - | |
| 5688 | - | 100 | 50 | 12WF65 | - | - | - | - | - | - | 54.1K | 54.1K | - | - | |
| 5689 | - | 100 | 50 | 12WF65 | - | - | - | - | - | - | 101B | 54.1K | - | - | |
| 5690 | - | 100 | 50 | 12WF85 | - | - | - | - | - | - | 102B | 102B | - | - | |
| 5691 | - | 100 | 50 | 12WF85 | - | - | - | - | - | - | 102B | 102B | - | - | |
| 5692 | - | 100 | 36 | 12WF106 | - | - | - | - | - | - | 102B | 111B | - | - | |
| 5693 | - | 100 | 50 | 12WF85 | - | - | - | - | - | - | 102B | 102B | - | - | |
| 5694 | - | 100 | 50 | 12WF106 | - | - | - | - | - | - | 111B | 102B | - | - | |
| 5695 | - | 100 | 50 | 12WF79 | - | - | - | - | - | - | 101B | 750B | - | - | |
| 5696 | - | 100 | 50 | 12WF72 | - | - | - | - | - | - | 54.1K | 751B | - | - | |
| 5697 | - | 100 | 50 | 12WF72 | - | - | - | - | - | - | 101B | 752B | - | - | |
| 5698 | - | 100 | 50 | 12WF79 | - | - | - | - | - | - | 101B | 101B | - | - | |
| 5699 | - | 100 | 50 | 12WF72 | - | - | - | - | - | - | 54.1K | 54.1K | - | - | |

LICENSED PROFESSIONAL ENGINEER — LESLIE E. ROBERTSON — No. 34360 — UNIVERSITY OF THE STATE OF NEW YORK

C-A51-171

**SKILLING, HELLE, CHRISTIANSEN, ROBERTSON** — Structural & Civil Engineers

PROJECT: THE WORLD TRADE CENTER | TITLE: BEAM SCHEDULE TOWERS A AND B | DATE: 12/ 6/68

REVISIONS

| BEAM NO. | SIZE | TYPE | FY | SHAPE | PLATE 1 WIDTH | PLATE 1 THICK | PLATE 2 WIDTH | PLATE 2 THICK | DIMENSIONS LENGTH | DIMENSIONS DIM. A | SUPPORTS LEFT | SUPPORTS RIGHT | STUDS NO. | STUDS SIZE | REMARKS |
|---|---|---|---|---|---|---|---|---|---|---|---|---|---|---|---|
| 5700 | - | 100 | 50 | 12WF72 | - | - | - | - | - | - | 54.1K | 101B | - | - | |
| 5701 | - | 100 | 50 | 12WF65 | - | - | - | - | - | - | 54.1K | 54.1K | - | - | |
| 5702 | - | 100 | 50 | 12WF65 | - | - | - | - | - | - | 54.1K | 101B | - | - | |
| 5703 | - | 100 | 50 | 12WF85 | - | - | - | - | - | - | 102B | 102B | - | - | |
| 5704 | - | 100 | 50 | 12WF92 | - | - | - | - | - | - | 752B | 47.1K | - | - | |
| 5705 | - | 100 | 50 | 12WF92 | - | - | - | - | - | - | 47.1K | 752B | - | - | 1 |
| 5706 | - | 100 | 50 | 18WF45 | - | - | - | - | - | - | 166B | 40.0K | 68 | 3/4X3 | |
| 5707 | - | 100 | 36 | 16WF36 | - | - | - | - | - | - | 156 | 26.5K | - | 3/4X3 | |
| 5708 | - | 100 | 36 | 10WF21 | - | - | - | - | - | - | 752A | 17.4K | - | - | |
| 5709 | - | 100 | 50 | 12WF92 | - | - | - | - | - | - | 751B | 47.1K | - | - | |
| 5710 | - | 100 | 36 | 10WF25 | - | - | - | - | - | - | 17.4K | 751A | - | - | |
| 5711 | - | 100 | 36 | 10WF89 | - | - | - | - | - | - | 102B | 760B | - | - | |
| 5712 | - | 100 | 36 | 12WF45 | - | - | - | - | - | - | 172A | 102B | - | - | |
| 5713 | - | 100 | 50 | 12WF79 | - | - | - | - | - | - | 54.1K | 756B | - | - | |
| 5714 | - | 100 | 50 | 12WF79 | - | - | - | - | - | - | 54.1K | 757B | - | - | |
| 5715 | - | 100 | 36 | 8B13 | - | - | - | - | - | - | 17.4K | 17.4K | - | - | |
| 5716 | - | 100 | 36 | 12WF65 | - | - | - | - | - | - | 101B | 760B | - | 3/4X3 | |
| 5717 | 18X7-1/2WF | 400 | 50 | 18WF60 | 6-1/2 | 7/8 | - | - | 26FT 0 | - | 166A | 54.1K | 88 | 3/4X3 | |
| 5718 | - | 403 | 50 | 30WF108 | - | - | - | - | - | - | 154A | 324B | 164 | 3/4X3 | |
| 5719 | - | 100 | 50 | 14WF30 | - | - | - | - | - | - | 164 | 26.5K | 30 | 3/4X3 | |
| 5720 | 18X7-1/2WF | 400 | 50 | 18WF60 | 6-1/2 | 7/8 | - | - | 26FT 0 | | 166A | 54.1K | 88 | 3/4X3 | |
| 5721 | - | 100 | 50 | 18WF45 | - | - | - | - | - | - | 166B | 40.0K | 68 | 3/4X3 | |
| 5722 | - | 443 | 36 | 30WF99 | - | - | - | - | - | - | 154 | 63.0K | 88 | 3/4X3 | |
| 5723 | - | 100 | 36 | 14WF30 | - | - | - | - | - | - | 165 | 26.5K | 30 | 3/4X3 | |
| 5724 | | 443 | 36 | 30WF99 | - | - | - | - | - | - | 154 | 63.0K | 88 | 3/4X3 | |
| 5725 | - | 442 | 50 | 30WF108 | - | - | - | - | - | - | 154A | 228B | 164 | 3/4X3 | |
| 5726 | - | 100 | 36 | 24WF84 | - | - | - | - | - | - | 55.0K | 55.0K | - | - | |
| 5727 | - | 100 | 36 | 12WF27 | - | - | - | - | - | - | 26.5K | 26.5K | - | - | |
| 5728 | - | 100 | 36 | 9CH13.4 | - | - | - | - | - | - | 17.4K | 17.4K | 10 | 3/4X3 | |
| 5729 | - | 100 | 36 | 10CH25 | - | - | - | - | - | - | 249C | 249C | - | - | |
| 5730 | - | 100 | 50 | 18WF45 | - | - | - | - | - | - | 35.3K | 35.3K | - | - | |
| 5731 | - | 100 | 36 | 12WF27 | - | - | - | - | - | - | 26.5K | 26.5K | - | - | |
| 5732 | - | 100 | 50 | 18WF45 | - | - | - | - | - | - | 40.0K | 166B | 68 | 3/4X3 | |
| 5733 | - | 442 | 50 | 30WF108 | - | - | - | - | - | - | 228B | 154A | 164 | 3/4X3 | |

REMARKS

1 USE BEAM TYPE 467 AT COL. 239, TOWER A ONLY. REVISION AFTER FABRICATION.

LICENSED PROFESSIONAL ENGINEER — LESLIE E. ROBERTSON — STATE OF NEW YORK

5-AB1-1/2

**SKILLING, HELLE, CHRISTIANSEN, ROBERTSON** — Structural & Civil Engineers

PROJECT: THE WORLD TRADE CENTER | TITLE: BEAM SCHEDULE TOWERS A AND B | DATE: 12/ 6/68

REVISIONS

| BEAM NO. | SIZE | TYPE | FY | PLATE 1 SHAPE | PLATE 1 WIDTH | PLATE 1 THICK | PLATE 2 WIDTH | PLATE 2 THICK | DIMENSIONS LENGTH | DIMENSIONS DIM. A | SUPPORTS LEFT | SUPPORTS RIGHT | STUDS NO. | STUDS SIZE | REMARKS |
|---|---|---|---|---|---|---|---|---|---|---|---|---|---|---|---|
| 5734 | - | 100 | 36 | 14WF30 | - | - | - | - | - | - | 26.5K | 164 | 30 | 3/4X3 | |
| 5735 | - | 443 | 36 | 30WF99 | - | - | - | - | - | - | 63.0K | 154 | 88 | 3/4X3 | |
| 5736 | - | 443 | 36 | 30WF99 | - | - | - | - | - | - | 63.0K | 154A | 88 | 3/4X3 | |
| 5737 | - | 100 | 36 | 12WF27 | - | - | - | - | - | - | 26.5K | 26.5K | - | - | |
| 5738 | - | 403 | 50 | 30WF108 | - | - | - | - | - | - | 253A | 154 | 92 | 3/4X3 | |
| 5739 | - | 100 | 50 | 21WF55 | - | - | - | - | - | - | 40.0K | 40.0K | 76 | 3/4X3 | |
| 5740 | - | 444 | 50 | 30WF108 | - | - | - | - | - | - | 167 | 324B | 164 | 3/4X3 | |
| 5741 | - | 100 | 50 | 14WF30 | - | - | - | - | - | - | 169 | 26.5K | 26 | 3/4X3 | |
| 5742 | 18X7-1/2WF | 400 | 50 | 18WF60 | 6 | 3/4 | - | - | 26FT 0 | | 168A | 50.0K | 88 | 3/4X3 | |
| 5743 | - | 100 | 36 | 9CH13.4 | - | - | - | - | - | - | 17.4K | 17.4K | - | - | |
| 5744 | - | 100 | 36 | 9CH13.4 | - | - | - | - | - | - | 17.4K | 17.4K | 10 | 3/4X3 | |
| 5745 | - | 100 | 50 | 18WF45 | - | - | - | - | - | - | 26.5K | 26.5K | 30 | 3/4X3 | |
| 5746 | - | 100 | 36 | 14WF30 | - | - | - | - | - | - | 26.5K | 26.5K | 30 | 3/4X3 | |
| 5747 | - | 444 | 50 | 30WF108 | - | - | - | - | - | - | 324B | 167 | 92 | 3/4X3 | |
| 5748 | - | 100 | 50 | 14WF30 | - | - | - | - | - | - | 26.5K | 169 | 26 | 3/4X3 | |
| 5749 | 18X7-1/2WF | 400 | 50 | 18WF60 | 6 | 3/4 | - | - | 26FT 0 | | 50.0K | 168A | 88 | 3/4X3 | |
| 5750 | - | 100 | 36 | 9CH13.4 | - | - | - | - | - | - | 17.4K | 17.4K | - | - | |
| 5751 | - | 100 | 36 | 9CH13.4 | - | - | - | - | - | - | 17.4K | 17.4K | 10 | 3/4X3 | |
| 5752 | - | 100 | 36 | 14WF30 | - | - | - | - | - | - | 26.5K | 26.5K | 30 | 3/4X3 | |
| 5753 | - | 100 | 50 | 18WF45 | - | - | - | - | - | - | 26.5K | 26.5K | 30 | 3/4X3 | |
| 5754 | - | 100 | 50 | 18WF45 | - | - | - | - | - | - | 26.5K | 168B | 50 | 3/4X3 | |
| 5755 | 18X8-1/2WF | 400 | 50 | 18WF60 | 8-1/2 | 3/4 | - | - | 26FT 0 | | 64.5K | 168A | 100 | 3/4X3 | 1 |
| 5756 | - | 100 | 50 | 14WF30 | - | - | - | - | - | - | 26.5K | 169 | 26 | 3/4X3 | |
| 5757 | 18X8-1/2WF | 400 | 50 | 18WF60 | 8-1/2 | 3/4 | - | - | 26FT 0 | | 64.5K | 168A | 88 | 3/4X3 | |
| 5758 | - | 448 | 50 | 30WF108 | - | - | - | - | - | - | 228A | 167 | 92 | 3/4X3 | |
| 5759 | - | 443 | 50 | 30WF99 | - | - | - | - | - | - | 63.0K | 154 | 150 | 3/4X3 | |
| 5760 | - | 403 | 50 | 30WF108 | - | - | - | - | - | - | 154 | 253A | 92 | 3/4X3 | |
| 5761 | - | 100 | 50 | 27WF94 | - | - | - | - | - | - | 44.2K | 44.2K | 70 | 3/4X2 1/2 | |
| 5762 | - | 100 | 36 | 9CH13.4 | - | - | - | - | - | - | 17.4K | 17.4K | - | - | |
| 5763 | - | 100 | 36 | 9CH13.4 | - | - | - | - | - | - | 17.4K | 17.4K | 10 | 3/4X3 | |
| 5764 | - | 100 | 36 | 14WF30 | - | - | - | - | - | - | 26.5K | 26.5K | 30 | 3/4X3 | |
| 5765 | - | 100 | 50 | 18WF45 | - | - | - | - | - | - | 26.5K | 26.5K | 30 | 3/4X3 | |
| 5766 | - | 403 | 50 | 30WF108 | - | - | - | - | - | - | 324B | 154 | 92 | 3/4X3 | |

REMARKS

1 NO STUDS ON SIDE OF FLANGE ADJACENT TO OPENING BETWEEN COORDINATES 26'-6 AND 36'-9 3/4

LICENSED PROFESSIONAL ENGINEER — LESLIE E. ROBERTSON — No. 34330 — UNIVERSITY OF ILLINOIS

5-AB1-173

**SKILLING, HELLE, CHRISTIANSEN, ROBERTSON** — Structural & Civil Engineers

PROJECT: THE WORLD TRADE CENTER | TITLE: BEAM SCHEDULE TOWERS A AND B | DATE: 12/ 6/68

REVISIONS

| BEAM NO. | SIZE | TYPE | FY | PLATE 1 SHAPE | PLATE 1 WIDTH | PLATE 1 THICK | PLATE 2 WIDTH | PLATE 2 THICK | DIMENSIONS LENGTH | DIMENSIONS DIM. A | SUPPORTS LEFT | SUPPORTS RIGHT | STUDS NO. | STUDS SIZE | REMARKS |
|---|---|---|---|---|---|---|---|---|---|---|---|---|---|---|---|
| 5767 | - | 100 | 50 | 14WF30 | - | - | - | - | - | - | 26.5K | 165 | 26 | 3/4X3 | |
| 5768 | 18X7-1/2WF | 400 | 50 | 18WF60 | 6 | 3/4 | - | - | 26FT 0 | - | 50.0K | 166C | 90 | 3/4X3 | |
| 5769 | - | 403 | 50 | 30WF108 | - | - | - | - | - | - | 154 | 3248 | 92 | 3/4X3 | |
| 5770 | - | 100 | 50 | 14WF30 | - | - | - | - | - | - | 165 | 26.5K | 26 | 3/4X3 | |
| 5771 | 18X7-1/2WF | 400 | 50 | 18WF60 | 6 | 3/4 | - | - | 26FT 0 | - | 166C | 50.0K | 90 | 3/4X3 | |
| 5772 | - | 100 | 36 | 9CH13.4 | - | - | - | - | - | - | 17.4K | 17.4K | - | - | |
| 5773 | - | 100 | 36 | 9CH13.4 | - | - | - | - | - | - | 17.4K | 17.4K | 10 | 3/4X3 | |
| 5774 | - | 100 | 36 | 14WF30 | - | - | - | - | - | - | 26.5K | 26.5K | 30 | 3/4X3 | |
| 5775 | - | 100 | 50 | 18WF45 | - | - | - | - | - | - | 26.5K | 26.5K | 30 | 3/4X3 | |
| 5776 | 16X8-1/2WF | 400 | 50 | 16WF58 | 7-1/2 | 1/2 | - | - | 32FT 3 | - | 156A | 41.6K | 66 | 3/4X3 | |
| 5777 | 16X8-1/2WF | 400 | 50 | 16WF58 | 7-1/2 | 1/2 | - | - | 32FT 3 | - | 156A | 41.6K | 66 | 3/4X3 | |
| 5778 | 16X8-1/2WF | 400 | 50 | 16WF58 | 7-1/2 | 1/2 | - | - | 32FT 3 | - | 156A | 41.6K | 66 | 3/4X3 | |
| 5779 | - | 100 | 36 | 8WF24 | - | - | - | - | - | - | 17.4K | 17.4K | 16 | 3/4X3 | |
| 5780 | - | 100 | 36 | 8WF24 | - | - | - | - | - | - | 17.4K | 17.4K | 16 | 3/4X3 | |
| 5781 | - | 100 | 36 | 14WF34 | - | - | - | - | - | - | 157 | 26.5K | 31 | 3/4X3 | |
| 5782 | - | 415 | 50 | 12WF85 | - | - | - | - | - | 19FT 4 | 70.7K | 101B | - | - | 1 |
| 5783 | - | 415 | 50 | 12WF92 | - | - | - | - | - | 19FT 4 | 70.7K | 101B | - | - | 1 |
| 5784 | - | 415 | 50 | 12WF92 | - | - | - | - | - | 22FT 0 | 101B | 101B | - | - | 1 |
| 5785 | - | 415 | 50 | 12WF92 | - | - | - | - | - | 20FT 4 | 70.7K | 70.7K | - | - | 1 |
| 5786 | - | 415 | 50 | 12WF85 | - | - | - | - | - | 19FT 4 | 70.7K | 70.7K | - | - | 1 |
| 5787 | - | 100 | 50 | 12WF85 | - | - | - | - | - | - | 70.7K | 70.7K | - | - | |
| 5788 | - | 100 | 50 | 12WF53 | - | - | - | - | - | - | 54.1K | 101B | - | - | |
| 5789 | - | 100 | 50 | 12WF50 | - | - | - | - | - | - | 54.1K | 54.1K | - | - | |
| 5790 | - | 100 | 50 | 12WF50 | - | - | - | - | - | - | 54.1K | 101B | - | - | |
| 5791 | 16X7 WF | 400 | 36 | 16WF40 | 6 | 3/4 | - | - | - | - | 26.5K | 156 | 70 | 3/4X3 | |
| 5792 | - | 100 | 50 | 12WF58 | - | - | - | - | - | - | 70.0K | 101B | - | - | |
| 5793 | - | 100 | 50 | 12WF58 | - | - | - | - | - | - | 54.1K | 54.1K | - | - | |
| 5794 | - | 100 | 50 | 12WF72 | - | - | - | - | - | - | 101B | 101B | - | - | |
| 5795 | - | 100 | 36 | 27WF102 | - | - | - | - | - | - | 152 | 230 | - | 3/4X3 | |
| 5796 | - | 100 | 36 | 14WF34 | - | - | - | - | - | - | 157 | 26.5K | 31 | 3/4X3 | |
| 5797 | - | 100 | 36 | 27WF102 | - | - | - | - | - | - | 152 | 44.2K | - | 3/4X3 | |
| 5798 | - | 100 | 36 | 27WF102 | - | - | - | - | - | - | 44.2K | 152 | - | 3/4X3 | |
| 5799 | - | 100 | 36 | 27WF102 | - | - | - | - | - | - | 152 | 44.2K | - | 3/4X3 | |

REMARKS

1 WEB OPENINGS SCHEDULED BY BEAM TYPE ARE REV. AFTER FABRICATION.

LICENSED PROFESSIONAL ENGINEER — LESLIE E. ROBERTSON — NEW YORK

5-A61-174

**SKILLING-HELLE-CHRISTIANSEN-ROBERTSON** — **Civil & Structural Engineers**

PROJECT: THE WORLD TRADE CENTER | TITLE: BEAM SCHEDULE TOWERS A AND B | DATE: 7/17/68

REVISIONS

| | BEAM NO. | SIZE | TYPE | FY | SHAPE | PLATE 1 WIDTH | PLATE 1 THICK | PLATE 2 WIDTH | PLATE 2 THICK | DIMENSIONS LENGTH | DIMENSIONS DIM. A | SUPPORTS LEFT | SUPPORTS RIGHT | STUDS NO. | STUDS SIZE | REMARKS |
|---|---|---|---|---|---|---|---|---|---|---|---|---|---|---|---|---|
| | 5800 | - | 100 | 36 | 27WF102 | - | - | - | - | - | - | 44.2K | 152 | | 3/4X3 | |
| | 5801 | 30X10-1/2WF | 400 | 36 | 30WF116 | 9 | 3/4 | - | - | 55FT 0 | - | 151 | 44.2K | - | - | |
| | 5802 | 30X10-1/2WF | 400 | 36 | 30WF116 | 9 | 3/4 | - | - | 55FT 0 | - | 44.2K | 44.2K | - | - | |
| | 5803 | - | 100 | 36 | 12B16.5 | - | - | - | - | - | - | 26.5K | 26.5K | | 3/4X3 | |
| | 5804 | - | 100 | 36 | 12B16.5 | - | - | - | - | - | - | 26.5K | 26.5K | | 3/4X3 | |
| | 5805 | - | 100 | 36 | 18WF50 | - | - | - | - | - | - | 155 | 26.5K | 63 | 3/4X3 | |
| | 5806 | - | 100 | 36 | 18WF50 | - | - | - | - | - | - | 26.5K | 155 | 63 | 3/4X3 | X |
| | 5807 | 30X10-1/2WF | 400 | 36 | 30WF116 | 9 | 3/4 | - | - | 32FT 3 | - | 151 | 230 | | 3/4X3 | |
| | 5808 | 30X10-1/2WF | 400 | 36 | 30WF116 | 9 | 3/4 | - | - | 32FT 3 | - | 230 | 151 | - | 3/4X3 | |
| | 5809 | - | 100 | 36 | 16WF36 | - | - | - | - | - | - | 161A | 26.5K | 24 | 3/4X3 | |
| | 5810 | - | 100 | 36 | 16WF36 | - | - | - | - | - | - | 26.5K | 161A | 24 | 3/4X3 | |
| | 5811 | 30X10WF | 400 | 36 | 30WF99 | 9 | 3/4 | - | - | 54FT 0 | | 151 | 289 | 88 | 3/4X3 | 2 |
| * | 5812 | 27X12WF | 401 | 36 | 27WF114 | 12 | 3/4 | - | - | - | - | 152 | 44.2K | - | - | |
| | 5813 | 30X10-1/2WF | 455 | 50 | 30WF108 | 8 | 1- 9/16 | - | - | 32FT 3 | | 159 | 271A | 124 | 3/4X3 | 1 |
| | 5814 | 30X10-1/2WF | 455 | 50 | 30WF108 | 8 | 1- 9/16 | - | - | 32FT 3 | | 271A | 159 | 124 | 3/4X3 | 1 |
| * | 5815 | - | 100 | 36 | 21WF55 | - | - | - | - | - | - | 35.3K | 35.3K | - | - | |
| * | 5816 | - | 100 | 36 | 21WF55 | - | - | - | - | - | - | 35.3K | 35.3K | - | - | |
| * | 5817 | 33X11-1/2WF | 405 | 50 | 33WF118 | 10 | 3/4 | 10 | 3/4 | 55FT 0 | | 53.0K | 53.0K | - | - | |
| * | 5818 | 33X11-1/2WF | 405 | 50 | 33WF118 | 10 | 3/4 | 10 | 3/4 | 55FT 0 | | 53.0K | 53.0K | - | - | |
| | 5819 | - | 100 | 36 | 18WF45 | - | - | - | - | - | - | 30.0K | 30.0K | - | - | |
| | 5820 | - | 417 | 50 | 12WF99 | - | - | - | - | - | - | 102B | 102B | - | - | 3 |
| | 5821 | 16X8-1/2WF | 400 | 36 | 16WF58 | 7-1/2 | 7/16 | - | - | 32FT 3 | | 161 | 234B | 62 | 3/4X3 | |
| | 5822 | - | 100 | 50 | 12WF79 | - | - | - | - | - | - | 102B | 102B | - | - | |
| | 5823 | - | 100 | 50 | 12WF85 | - | - | - | - | - | - | 47.1K | 76OB | - | - | |
| | 5824 | - | 100 | 50 | 12WF85 | - | - | - | - | - | - | 102B | 102B | - | - | |
| | 5825 | - | 416 | 50 | 12WF85 | - | - | - | - | - | 19FT 1 | 101B | 70.7K | - | - | 3 |
| | 5826 | - | 416 | 50 | 12WF65 | - | - | - | - | - | 24FT 4 | 101B | 54.1K | - | - | 3 |
| | 5827 | - | 416 | 50 | 12WF65 | - | - | - | - | - | 24FT 4 | 54.1K | 54.1K | - | - | 3 |
| | 5828 | - | 416 | 50 | 12WF106 | - | - | - | - | - | 17FT 4 | 101D | 101B | - | - | 3 |
| | 5829 | - | 100 | 50 | 12WF50 | - | - | - | - | - | - | 101B | 54.1K | - | - | 3 |
| | 5830 | - | 100 | 50 | 12WF58 | - | - | - | - | - | - | 101B | 54.1K | - | - | |
| | 5831 | - | 100 | 50 | 12WF50 | - | - | - | - | - | - | 54.1K | 54.1K | - | - | |
| | 5832 | - | 100 | 50 | 10WF89 | - | - | - | - | - | | 47.1K | 76OB | - | - | |
| | 5833 | - | 416 | 50 | 10WF54 | - | - | - | - | - | 13FT 4 | 47.1K | 47.1K | - | - | 3 |

REMARKS

1 DIMENSION B 6FT 11

2 DIMENSION B 20FT 3

3 WEB OPENINGS SCHEDULED BY BEAM TYPE ARE REV. AFTER FABRICATION

* HOLD

LICENSED PROFESSIONAL ENGINEER — LESLIE E. ROBERTSON — No. 34360 — UNIVERSITY OF THE STATE OF NEW YORK

5-AB1-175

**SKILLING-HELLE-CHRISTIANSEN-ROBERTSON** — **Civil & Structural Engineers**

PROJECT: THE WORLD TRADE CENTER | TITLE: BEAM SCHEDULE TOWERS A AND B | DATE: 1/22/68

REVISIONS

| BEAM NO. | SIZE | TYPE | FY | SHAPE | PLATE 1 WIDTH | PLATE 1 THICK | PLATE 2 WIDTH | PLATE 2 THICK | DIMENSIONS LENGTH | DIMENSIONS DIM. A | SUPPORTS LEFT | SUPPORTS RIGHT | STUDS NO. | STUDS SIZE | REMARKS |
|---|---|---|---|---|---|---|---|---|---|---|---|---|---|---|---|
| 5834 | - | 100 | 36 | 12B16.5 | - | - | - | - | - | - | 111H | 283J | - | - | |
| 5835 | - | 100 | 36 | 12B16.5 | - | - | - | - | - | - | 283J | 111H | - | - | |
| 5836 | - | 100 | 36 | 12B16.5 | - | - | - | - | - | - | 26.5K | 26.5K | - | - | |
| 5837 | - | 100 | 36 | 12B16.5 | - | - | - | - | - | - | 238B | 238A | - | - | |
| 5838 | - | 100 | 36 | 12B16.5 | - | - | - | - | - | - | 26.5K | 26.5K | - | - | |
| 5839 | - | 100 | 36 | 12B16.5 | - | - | - | - | - | - | 111H | 111H | - | - | X |
| 5840 | - | 100 | 36 | 10B15 | - | - | - | - | - | - | 17.4K | 17.4K | - | - | |
| 5841 | - | 100 | 36 | 10WF21 | - | - | - | - | - | - | 17.4K | 17.4K | - | - | |
| 5842 | - | 100 | 36 | 10WF21 | - | - | - | - | - | - | 503B | 513A | - | - | |
| 5843 | - | 100 | 36 | 12B16.5 | - | - | - | - | - | - | 26.5K | 26.5K | - | - | |
| 5844 | - | 100 | 36 | 12B19 | - | - | - | - | - | - | 26.5K | 26.5K | - | - | |
| 5845 | - | 100 | 36 | 12B16.5 | - | - | - | - | - | - | 26.5K | 111H | - | - | |
| 5846 | - | 100 | 36 | 12B16.5 | - | - | - | - | - | - | 111H | 26.5K | - | - | |
| 5847 | - | 100 | 36 | 12B16.5 | - | - | - | - | - | - | 111H | 26.5K | - | - | |
| 5848 | - | 100 | 36 | 12B16.5 | - | - | - | - | - | - | 26.5K | 111H | - | - | |
| 5849 | - | 100 | 36 | 12B16.5 | - | - | - | - | - | - | 26.5K | 26.5K | - | - | |
| 5850 | - | 100 | 36 | 12B16.5 | - | - | - | - | - | - | 106C | 111H | - | - | |
| 5851 | - | 100 | 36 | 12B16.5 | - | - | - | - | - | - | 217A | 217A | - | - | |
| 5852 | - | 100 | 36 | 14B22 | - | - | - | - | - | - | 283I | 26.5K | - | - | |
| 5853 | - | 100 | 36 | 14B22 | - | - | - | - | - | - | 111A | 26.5K | - | - | |
| 5854 | - | 100 | 36 | 14B22 | - | - | - | - | - | - | 26.5K | 283J | - | - | |
| 5855 | - | 100 | 36 | 12B16.5 | - | - | - | - | - | - | 111H | 26.5K | - | - | |
| 5856 | - | 100 | 36 | 14B22 | - | - | - | - | - | - | 111H | 111H | - | - | |
| 5857 | - | 100 | 36 | 14B22 | - | - | - | - | - | - | 26.5K | 111H | - | - | |
| 5858 | - | 100 | 36 | 12B16.5 | - | - | - | - | - | - | 111H | 26.5K | - | - | |
| 5859 | - | 100 | 36 | 12WF27 | - | - | - | - | - | - | 26.5K | 350B | - | - | |
| 5860 | - | 100 | 36 | 12B16.5 | - | - | - | - | - | - | 26.5K | 111H | - | - | |
| 5861 | - | 100 | 36 | 12B16.5 | - | - | - | - | - | - | 350B | 350A | - | - | |
| 5862 | - | 100 | 36 | 12WF27 | - | - | - | - | - | - | 350A | 26.5K | - | - | |
| 5863 | - | 100 | 36 | 10WF33 | - | - | - | - | - | - | 457A | 503B | - | - | |
| 5864 | - | 100 | 36 | 8B13 | - | - | - | - | - | - | 503B | 283I | - | - | |
| 5865 | - | 100 | 36 | 8B13 | - | - | - | - | - | - | 111H | 503B | - | - | |
| 5866 | - | 100 | 36 | 8B13 | - | - | - | - | - | - | 17.4K | 17.4K | - | - | |

**SKILLING-HELLE-CHRISTIANSEN-ROBERTSON** — **Civil & Structural Engineers**

PROJECT: THE WORLD TRADE CENTER | TITLE: BEAM SCHEDULE TOWERS A AND B | DATE: 7//7/68

REVISIONS

| BEAM NO. | SIZE | TYPE | FY | SHAPE | PLATE 1 WIDTH | PLATE 1 THICK | PLATE 2 WIDTH | PLATE 2 THICK | DIMENSIONS LENGTH | DIMENSIONS DIM. A | SUPPORTS LEFT | SUPPORTS RIGHT | STUDS NO. | STUDS SIZE | REMARKS |
|---|---|---|---|---|---|---|---|---|---|---|---|---|---|---|---|
| 5867 | - | 100 | 36 | 8B13 | - | - | - | - | - | - | 529A | 503B | - | - | |
| 5868 | - | 100 | 36 | 8WF17 | - | - | - | - | - | - | 111H | 503B | - | - | |
| 5869 | - | 100 | 36 | 8WF17 | - | - | - | - | - | - | 111H | 529A | - | - | |
| 5870 | - | 100 | 36 | 16WF40 | - | - | - | - | - | - | 111A | 353A | - | - | |
| 5871 | - | 100 | 36 | 16WF40 | - | - | - | - | - | - | 353A | 111A | - | - | |
| 5872 | - | 100 | 36 | 14WF30 | - | - | - | - | - | - | 353A | 353A | - | - | |
| 5873 | - | 100 | 36 | 12B16.5 | - | - | - | - | - | - | 111H | 111H | - | - | |
| 5874 | - | 100 | 36 | 12B16.5 | - | - | - | - | - | - | 26.5K | 213B | - | - | |
| 5875 | - | 100 | 36 | 12WF27 | - | - | - | - | - | - | 111H | 111H | - | - | |
| 5876 | - | 100 | 36 | 12B16.5 | - | - | - | - | - | - | 283J | 283J | - | - | |
| 5877 | - | 100 | 36 | 12CH20.7 | - | - | - | - | - | - | 26.5K | 26.5K | - | - | |
| 5878 | - | 100 | 36 | 12B16.5 | - | - | - | - | - | - | 26.5K | 26.5K | - | - | |
| 5879 | - | 100 | 36 | 12B16.5 | - | - | - | - | - | - | 26.5K | 26.5K | - | - | |
| 5880 | - | 100 | 36 | 12B16.5 | - | - | - | - | - | - | 260C | 260C | - | - | |
| 5881 | - | 100 | 36 | 12B22 | - | - | - | - | - | - | 260C | 260C | - | - | |
| 5882 | - | 100 | 36 | 12B16.5 | - | - | - | - | - | - | 260C | 260C | - | - | |
| 5883 | - | 100 | 36 | 10WF29 | - | - | - | - | - | - | 260B | 513A | - | - | |
| 5884 | - | 100 | 36 | 10WF29 | - | - | - | - | - | - | 111H | 504 | - | - | |
| 5885 | - | 100 | 36 | 12B16.5 | - | - | - | - | - | - | 111H | 111H | - | - | |
| 5886 | - | 100 | 36 | 14WF30 | - | - | - | - | - | - | 111A | 111H | - | - | |
| 5887 | - | 100 | 36 | 12B16.5 | - | - | - | - | - | - | 111H | 217A | - | - | |
| 5888 | - | 100 | 36 | 10WF33 | - | - | - | - | - | - | 111H | 111H | - | - | |
| 5889 | - | 100 | 36 | 16WF36 | - | - | - | - | - | - | 111A | 111H | - | - | |
| 5890 | - | 100 | 36 | 12B16.5 | - | - | - | - | - | - | 111H | 105H | - | - | 1 |
| 5891 | - | 100 | 36 | 12B16.5 | - | - | - | - | - | - | 213B | 217A | - | - | |
| 5892 | - | 100 | 36 | 12B16.5 | - | - | - | - | - | - | 220A | 111H | - | - | |
| 5893 | - | 100 | 36 | 16WF36 | - | - | - | - | - | - | 343A | 350A | - | - | |
| 5894 | - | 100 | 36 | 16B26 | - | - | - | - | - | - | 238A | 238A | - | - | |
| 5895 | - | 100 | 36 | 12B16.5 | - | - | - | - | - | - | 26.5K | 26.5K | - | - | |
| 5896 | - | 100 | 36 | 16WF36 | - | - | - | - | - | - | 26.5K | 26.5K | - | - | |
| 5897 | - | 100 | 36 | 12B16.5 | - | - | - | - | - | - | 111H | 111H | - | - | |
| 5898 | - | 100 | 36 | 8B13 | - | - | - | - | - | - | 17.4K | 753 | - | - | |
| 5899 | - | 100 | 36 | 8B13 | - | - | - | - | - | - | 753 | 17.4K | | 3/4X3 | |

REMARKS

1 END SUPPORTS REVISED AFTER FABRICATION, SEE 19-A-909.

LICENSED PROFESSIONAL ENGINEER — LESLIE E. ROBERTSON — No. 34360 — UNIVERSITY OF THE STATE OF NEW YORK

5-AB1-177

**SKILLING-HELLE-CHRISTIANSEN-ROBERTSON** — **Civil & Structural Engineers**

PROJECT: THE WORLD TRADE CENTER | TITLE: BEAM SCHEDULE TOWERS A AND B | DATE: 7/7/68

REVISIONS

| BEAM NO. | SIZE | TYPE | FY | SHAPE | PLATE 1 WIDTH | PLATE 1 THICK | PLATE 2 WIDTH | PLATE 2 THICK | DIMENSIONS LENGTH | DIMENSIONS DIM. A | SUPPORTS LEFT | SUPPORTS RIGHT | STUDS NO. | STUDS SIZE | REMARKS |
|---|---|---|---|---|---|---|---|---|---|---|---|---|---|---|---|
| 5900 | - | 100 | 36 | 8B13 | - | - | - | - | - | - | 753 | 17.4K | - | - | |
| 5901 | - | 100 | 36 | 8B13 | - | - | - | - | - | - | 753 | 17.4K | - | - | |
| 5902 | - | 100 | 36 | 8B13 | - | - | - | - | - | - | 753 | 17.4K | - | - | |
| 5903 | - | 100 | 36 | 8B13 | - | - | - | - | - | - | 753 | 525A | - | - | |
| 5904 | - | 100 | 36 | 8B13 | - | - | - | - | - | - | 753 | 527A | - | - | |
| 5905 | - | 100 | 36 | 8B13 | - | - | - | - | - | - | 753 | 526A | - | - | |
| 5906 | - | 100 | 36 | 8B13 | - | - | - | - | - | - | 753 | 528A | - | - | |
| 5907 | - | 100 | 36 | 14WF30 | - | - | - | - | - | - | 528A | 527A | - | - | |
| 5908 | - | 100 | 36 | 8B13 | - | - | - | - | - | - | 526A | 526A | - | - | |
| 5909 | - | 100 | 36 | 8B13 | - | - | - | - | - | - | 503B | 503B | - | - | |
| 5910 | - | 100 | 36 | 14WF30 | - | - | - | - | - | - | 527A | 525A | - | - | |
| 5911 | - | 100 | 36 | 14WF30 | - | - | - | - | - | - | 525A | 524A | - | - | |
| 5912 | - | 100 | 36 | 14WF30 | - | - | - | - | - | - | 524A | 756A | - | - | |
| 5913 | - | 100 | 36 | 16WF45 | - | - | - | - | - | - | 26.5K | 260A | - | - | |
| 5914 | - | 100 | 36 | 18WF50 | - | - | - | - | - | - | 503B | 26.5K | - | - | |
| 5915 | - | 100 | 36 | 18WF50 | - | - | - | - | - | - | 503B | 26.5K | - | - | |
| 5916 | - | 100 | 36 | 16WF45 | - | - | - | - | - | - | 528A | 111A | - | - | |
| 5917 | - | 100 | 36 | 10WF33 | - | - | - | - | - | - | 457A | 503B | - | - | |
| 5918 | - | 100 | 36 | 10WF21 | - | - | - | - | - | - | 17.4K | 17.4K | - | - | |
| 5919 | - | 100 | 36 | 10WF25 | - | - | - | - | - | - | 260B | 260B | - | - | |
| 5920 | - | 100 | 36 | 12B22 | - | - | - | - | - | - | 260C | 260C | - | - | |
| 5921 | 16X8-1/2WF | 400 | 36 | 16WF58 | 7-1/2 | 7/16 | - | - | 32FT 3 | - | 161 | 39.6K | 62 | 3/4X3 | |
| 5922 | - | 100 | 36 | 12WF36 | - | - | - | - | - | - | 111H | 111A | - | - | |
| 5923 | - | 100 | 36 | 10WF21 | - | - | - | - | - | - | 283J | 111H | - | - | |
| 5924 | - | 100 | 36 | 10WF21 | - | - | - | - | - | - | 111H | 283J | - | - | |
| 5925 | - | 100 | 36 | 8WF28 | - | - | - | - | - | - | 283H | 111H | - | - | |
| 5926 | - | 100 | 36 | 24WF76 | - | - | - | - | - | - | 305 | 491 | - | - | |
| 5927 | - | 100 | 36 | 12B16.5 | - | - | - | - | - | - | 26.5K | 26.5K | - | - | |
| 5928 | - | 100 | 36 | 12B16.5 | - | - | - | - | - | - | 260C | 503A | - | - | (5) |
| 5929 | - | 100 | 36 | 12B16.5 | - | - | - | - | - | - | 503A | 283J | - | - | |
| 5930 | - | 100 | 36 | 12B16.5 | - | - | - | - | - | - | 503A | 507 | - | - | 3,4 |
| 5931 | - | 100 | 36 | 12B16.5 | - | - | - | - | - | - | 27.0K | | - | - | 6 |
| 5932 | - | 100 | 36 | 8WF17 | - | - | - | - | - | - | 17.4K | 761A | - | - | |
| 5933 | - | 100 | 36 | 16WF36 | - | - | - | - | - | - | 172A | 102C | 34 | 3/4X3 | |

LICENSED PROFESSIONAL ENGINEER — LESLIE E. ROBERTSON — No. 34360 — UNIVERSITY OF THE STATE OF NEW YORK

REMARKS

3 DETAIL 178A RIGHT END OF BEAM
4 LEFT END OF BEAM SITS ON POST
5 VOID
6 LEFT END REVISED AFTER FABRICATION, SEE 19-A-908

**SKILLING-HELLE-CHRISTIANSEN-ROBERTSON** — **Civil & Structural Engineers**

PROJECT: THE WORLD TRADE CENTER | TITLE: BEAM SCHEDULE TOWERS A AND B | DATE: 7//7/68

REVISIONS

| BEAM NO. | SIZE | TYPE | FY | PLATE 1 SHAPE | PLATE 1 WIDTH | PLATE 1 THICK | PLATE 2 WIDTH | PLATE 2 THICK | DIMENSIONS LENGTH | DIMENSIONS DIM. A | SUPPORTS LEFT | SUPPORTS RIGHT | STUDS NO. | STUDS SIZE | REMARKS | |
|---|---|---|---|---|---|---|---|---|---|---|---|---|---|---|---|---|
| 5934 | - | 100 | 50 | 12WF58 | - | - | - | - | - | - | 54.1K | 757B | - | - | | |
| 5935 | - | 100 | 50 | 12WF72 | - | - | - | - | - | - | 54.1K | 756B | - | - | | |
| 5936 | - | 100 | 50 | 12WF58 | - | - | - | - | - | - | 54.1K | 101B | - | - | | |
| 5937 | - | 100 | 50 | 12WF65 | - | - | - | - | - | - | 54.1K | 54.1K | - | - | | |
| 5938 | - | 100 | 50 | 12WF79 | - | - | - | - | - | - | 756B | 54.1K | - | - | | |
| 5939 | - | 100 | 50 | 12WF79 | - | - | - | - | - | - | 757B | 54.1K | - | - | X | |
| 5940 | - | 100 | 50 | 12WF45 | - | - | - | - | - | - | 102B | 756B | - | - | | |
| 5941 | - | 100 | 50 | 12WF45 | - | - | - | - | - | - | 26.5K | 756B | - | - | | |
| 5942 | - | 100 | 50 | 12WF45 | - | - | - | - | - | - | 26.5K | 757B | - | - | | |
| 5943 | - | 100 | 50 | 12WF31 | - | - | - | - | - | - | 26.5K | 758 | - | - | | |
| 5944 | - | 100 | 36 | 8B15 | - | - | - | - | - | - | 758 | 17.4K | - | - | | |
| 5945 | - | 100 | 50 | 12WF65 | - | - | - | - | - | - | 756B | 101D | - | - | | |
| 5946 | - | 100 | 50 | 12WF65 | - | - | - | - | - | - | 101D | 101B | - | - | | |
| 5947 | - | 100 | 36 | 10WF21 | - | - | - | - | - | - | 102B | 102B | - | - | | |
| 5948 | - | 100 | 50 | 12WF58 | - | - | - | - | - | - | 101B | 101B | - | - | | |
| 5949 | - | 100 | 36 | 14WF30 | - | - | - | - | - | - | 102C | 770 | 28 | 3/4X3 | | |
| 5950 | - | 100 | 36 | 14WF30 | - | - | - | - | - | - | 26.5K | 770 | 28 | 3/4X3 | | |
| 5951 | - | 100 | 36 | 14WF30 | - | - | - | - | - | - | 26.5K | 765 | 28 | 3/4X3 | | |
| 5952 | - | 100 | 36 | 14WF30 | - | - | - | - | - | - | 26.5K | 769 | - | - | | |
| 5953 | - | 100 | 50 | 24WF68 | - | - | - | - | - | - | 767A | 101C | 64 | 3/4X3 | | |
| 5954 | - | 100 | 50 | 24WF84 | - | - | - | - | - | - | 101C | 101C | 78 | 3/4X3D | | |
| 5955 | - | 100 | 36 | 10WF21 | - | - | - | - | - | - | 102C | 102C | 20 | 3/4X3 | | |
| 5956 | - | 100 | 36 | 10B15 | - | - | - | - | - | - | 770 | 17.4K | 14 | 3/4X3 | | |
| 5957 | - | 100 | 50 | 21WF62 | - | - | - | - | - | - | 767A | 48.1K | 58 | 3/4X3 | | |
| 5958 | - | 100 | 50 | 21WF55 | - | - | - | - | - | - | 772A | 48.1K | 52 | 3/4X3 | | |
| 5959 | - | 100 | 50 | 12WF58 | - | - | - | - | - | - | 515C | 515D | 28 | 3/4X3 | | |
| 5960 | - | 100 | 36 | 8WF58 | - | - | - | - | - | - | 515A | 515B | 20 | 3/4X3H | | |
| 5961 | - | 100 | 50 | 24WF76 | - | - | - | - | - | - | 48.1K | 767B | 70 | 3/4X3 | | |
| 5962 | - | 100 | 50 | 24WF76 | - | - | - | - | - | - | 48.1K | 766B | 70 | 3/4X3 | | |
| 5963 | - | 100 | 36 | 33WF220 | - | - | - | - | - | - | 126.0K | 767E | 98 | 3/4X3 | | 1 |
| 5964 | - | 100 | 36 | 33WF130 | - | - | - | - | - | - | 126.0K | 767E | 98 | 3/4X3 | | 1 |
| 5965 | - | 100 | 36 | 27WF84 | - | - | - | - | - | - | 54.1K | 54.1K | - | - | | |
| 5966 | - | 100 | 36 | 24WF68 | - | - | - | - | - | - | 48.1K | 48.1K | - | - | | |

REMARKS

1 REVISION AFTER FABRICATION, LEFT SUPPORT, TOWER A ONLY
SEE 19-A-907.

LICENSED PROFESSIONAL ENGINEER — LESLIE E. ROBERTSON — No. 34360 — UNIVERSITY OF THE STATE OF NEW YORK

5-AB1-179

**WORTHINGTON, SKILLING, HELLE & JACKSON** — Civil & Structural Engineers

PROJECT: THE WORLD TRADE CENTER | TITLE: BEAM SCHEDULE TOWERS A AND B | DATE: 7/20/67

REVISIONS

| BEAM NO. | SIZE | TYPE | FY | SHAPE | PLATE 1 WIDTH | PLATE 1 THICK | PLATE 2 WIDTH | PLATE 2 THICK | DIMENSIONS LENGTH | DIMENSIONS DIM. A | SUPPORTS LEFT | SUPPORTS RIGHT | STUDS NO. | STUDS SIZE | REMARKS |
|---|---|---|---|---|---|---|---|---|---|---|---|---|---|---|---|
| 5967 | - | 100 | 36 | 16WF36 | - | - | - | - | - | - | 106 | 106 | - | - | |
| 5968 | - | 100 | 36 | 16WF36 | - | - | - | - | - | - | 106 | 106 | - | - | |
| 5969 | - | 100 | 36 | 16WF36 | - | - | - | - | - | - | 106 | 106 | - | - | |
| 5970 | - | 100 | 36 | 16WF36 | - | - | - | - | - | - | 106 | 106 | - | - | |
| 5971 | - | 100 | 36 | 16WF36 | - | - | - | - | - | - | 106 | 106 | - | - | X |
| 5972 | - | 100 | 36 | 16WF36 | - | - | - | - | - | - | 106 | 488 | - | - | |
| 5973 | - | 100 | 36 | 24WF76 | - | - | - | - | - | - | 488 | 488 | - | - | |
| 5974 | - | 100 | 36 | 16WF36 | - | - | - | - | - | - | 488 | 106 | - | - | |
| 5975 | - | 100 | 36 | 16WF36 | - | - | - | - | - | - | 106 | 106 | - | - | |
| 5976 | - | 100 | 36 | 16WF36 | - | - | - | - | - | - | 106 | 106 | - | - | |
| 5977 | - | 100 | 36 | 16WF36 | - | - | - | - | - | - | 106 | 106 | - | - | |
| 5978 | - | 100 | 36 | 16WF36 | - | - | - | - | - | - | 106 | 201 | - | - | |
| 5979 | - | 100 | 36 | 16WF36 | - | - | - | - | - | - | 105 | 201 | - | - | |
| 5980 | - | 100 | 36 | 16WF36 | - | - | - | - | - | - | 201 | 201 | - | - | |
| 5981 | - | 100 | 36 | 16WF36 | - | - | - | - | - | - | 201 | 105 | - | - | |
| 5982 | - | 100 | 36 | 16WF36 | - | - | - | - | - | - | 201 | 106 | - | - | |
| 5983 | - | 100 | 36 | 16WF36 | - | - | - | - | - | - | 106 | 105 | - | - | |
| 5984 | - | 100 | 36 | 16WF36 | - | - | - | - | - | - | 105 | 106 | - | - | |
| 5985 | - | 100 | 36 | 24WF68 | - | - | - | - | - | - | 297 | 488 | - | - | |
| 5986 | - | 100 | 36 | 24WF76 | - | - | - | - | - | - | 299 | 488 | - | - | |
| 5987 | - | 100 | 36 | 24WF68 | - | - | - | - | - | - | 488 | 297 | - | - | |
| 5988 | - | 100 | 36 | 24WF76 | - | - | - | - | - | - | 488 | 299 | - | - | |
| 5989 | - | 100 | 36 | 8WF24 | - | - | - | - | - | - | 489 | 490 | - | - | |
| 5990 | - | 100 | 36 | 8WF24 | - | - | - | - | - | - | 489 | 299 | - | - | |
| 5991 | - | 100 | 36 | 8WF24 | - | - | - | - | - | - | 299 | 489 | - | - | |
| 5992 | - | 100 | 36 | 8WF24 | - | - | - | - | - | - | 490 | 489 | - | - | |
| 5993 | - | 100 | 36 | 8WF24 | - | - | - | - | - | - | 488 | 488 | - | - | |
| 5994 | - | 100 | 36 | 24WF68 | - | - | - | - | - | - | 491 | 300 | - | - | |
| 5995 | - | 100 | 36 | 16WF36 | - | - | - | - | - | - | 300 | 262 | - | - | |
| 5996 | - | 100 | 36 | 24WF76 | - | - | - | - | - | - | 105 | 105 | - | - | |
| 5997 | - | 100 | 36 | 8WF24 | - | - | - | - | - | - | 489 | 492 | - | - | |
| 5998 | - | 100 | 36 | 8WF24 | - | - | - | - | - | - | 489 | 490 | - | - | |
| 5999 | - | 100 | 36 | 24WF76 | - | - | - | - | - | - | 491 | 492 | - | - | |

REMARKS

LICENSED PROFESSIONAL ENGINEER — LESLIE E. ROBERTSON — No. 34360 — REGISTERED BY THE STATE OF NEW YORK

5-AB1-180

**SKILLING, HELLE, CHRISTIANSEN, ROBERTSON** — Structural & Civil Engineers

PROJECT: THE WORLD TRADE CENTER | TITLE: BEAM SCHEDULE TOWERS A AND 8 | DATE: 12/ 6/68

REVISIONS

| BEAM NO. | SIZE | TYPE | FY | PLATE 1 SHAPE | PLATE 1 WIDTH | PLATE 1 THICK | PLATE 2 WIDTH | PLATE 2 THICK | DIMENSIONS LENGTH | DIMENSIONS DIM. A | SUPPORTS LEFT | SUPPORTS RIGHT | STUDS NO. | STUDS SIZE | REMARKS |
|---|---|---|---|---|---|---|---|---|---|---|---|---|---|---|---|
| 6001 | - | 100 | 50 | 18WF50 | - | - | - | - | - | - | 70.7K | 70.7K | 60 | 3/4X3 | |
| 6002 | - | 700 | 50 | 18WF55 | 9 1/2 | 1/2 | - | - | SEE SUPT. DET. | | 729A | 731A | 65 | 3/4X3 | |
| 6003 | - | 700 | 50 | 21WF55 | 10-1/4 | 1/2 | - | - | SEE SUPT. DET. | | 728A | 728A | 60 | 3/4X3 | |
| 6004 | - | 100 | 36 | 10B15 | - | - | - | - | - | - | 17.4K | 765 | - | - | |
| 6005 | - | 100 | 50 | 18WF70 | - | - | - | - | - | - | 705C | 739 | 80 | 3/4X3 | X |
| 6006 | - | 100 | 36 | 12WF36 | - | - | - | - | - | - | 283L | 54.1K | - | - | |
| 6007 | - | 100 | 50 | 16WF4 | - | - | - | - | - | - | 729A | 731B | 52 | 3/4X3 | |
| 6008 | - | 100 | 50 | 18WF45 | - | - | - | - | - | - | 70.7K | 70.7K | 58 | 3/4X3 | |
| 6009 | - | 100 | 36 | 16WF45 | - | - | - | - | - | - | 709D | 709 | 30 | 3/4X3 | |
| 6010 | - | 100 | 36 | 10WF21 | - | - | - | - | - | - | 769A | 26.5K | - | - | |
| 6011 | - | 700 | 36 | 18WF45 | 9-1/2 | 1/2 | - | - | SEE SUPT. DET. | | 739 | 705C | 28 | 3/4X3 | 1 |
| 6012 | - | 700 | 50 | 18WF50 | 9-1/2 | 1/2 | - | - | SEE SUPT. DET. | | 729A | 728B | 60 | 3/4X3 | |
| 6013 | - | 100 | 36 | 14WF34 | - | - | - | - | - | - | 26.5K | 772C | - | - | |
| 6014 | - | 100 | 36 | 14WF34 | - | - | - | - | - | - | 26.5K | 767C | - | - | |
| 6015 | - | 100 | 36 | 14WF34 | - | - | - | - | - | - | 102C | 768C | - | - | |
| 6016 | - | 100 | 50 | 12WF36 | - | - | - | - | - | - | 26.5K | 26.5K | - | - | |
| 6017 | - | 100 | 36 | 12WF36 | - | - | - | - | - | - | 102B | 760B | - | - | |
| 6018 | - | 100 | 50 | 21WF62 | - | - | - | - | - | - | 48.1K | 767B | - | - | |
| 6019 | - | 700 | 50 | 16WF36 | 9 | 1/2 | - | - | SEE SUPT. DET. | | 728A | 728A | 48 | 3/4X3 | |
| 6020 | - | 700 | 50 | 18WF50 | 9-1/2 | 1/2 | - | - | SEE SUPT. DET. | | 729A | 728A | 60 | 3/4X3 | |
| 6021 | - | 100 | 36 | 12B19 | - | - | - | - | - | - | 26.5K | 26.5K | - | - | |
| 6022 | - | 100 | 50 | 12WF40 | - | - | - | - | - | - | 110B | 751B | - | - | |
| 6023 | - | 100 | 36 | 10WF21 | - | - | - | - | - | - | 26.5K | 26.5K | - | - | |
| 6024 | - | 100 | 50 | 12WF65 | - | - | - | - | - | - | 101B | 751B | - | - | |
| 6025 | - | 100 | 50 | 12WF58 | - | - | - | - | - | - | 54.1K | 54.1K | - | - | |
| 6026 | - | 100 | 36 | 12WF40 | - | - | - | - | - | - | 102B | 102B | - | - | |
| 6027 | - | 100 | 36 | 16WF36 | - | - | - | - | - | - | 35.3K | 515F | - | - | |
| 6028 | - | 100 | 36 | 12WF72 | - | - | - | - | - | - | 111C | 111C | - | - | |
| 6029 | - | 100 | 50 | 12WF85 | - | - | - | - | - | - | 102B | 54.1K | - | - | |
| 6030 | - | 100 | 50 | 12WF40 | - | - | - | - | - | - | 101B | 108B | - | - | |
| 6031 | - | 100 | 36 | 12WF22 | - | - | - | - | - | - | 111A | 111A | - | - | |
| 6032 | - | 100 | 50 | 21WF55 | - | - | - | - | - | - | 48.1K | 772A | - | - | |
| 6033 | - | 100 | 50 | 21WF62 | - | - | - | - | - | - | 70.7K | 772A | - | - | |

REMARKS

1 SEE BEAM TYPE 425 FOR COVER PL AND STUD PLACEMENT

LICENSED PROFESSIONAL ENGINEER — LESLIE E. ROBERTSON — No. 34360 — STATE OF NEW YORK

5-AB1-181

**SKILLING, HELLE, CHRISTIANSEN, ROBERTSON** — **Structural & Civil Engineers**

PROJECT: THE WORLD TRADE CENTER | TITLE: BEAM SCHEDULE TOWERS A AND B | DATE: 12/ 6/58

REVISIONS

| BEAM NO. | SIZE | TYPE | FY | SHAPE | PLATE 1 WIDTH | PLATE 1 THICK | PLATE 2 WIDTH | PLATE 2 THICK | DIMENSIONS LENGTH | DIMENSIONS DIM. A | SUPPORTS LEFT | SUPPORTS RIGHT | STUDS NO. | STUDS SIZE | REMARKS |
|---|---|---|---|---|---|---|---|---|---|---|---|---|---|---|---|
| 6034 | - | 100 | 50 | 24WF68 | - | - | - | - | - | - | 17zA | 102C | - | - | |
| 6035 | - | 100 | 50 | 12WF65 | - | - | - | - | - | - | 53.0K | 751B | - | - | |
| 6036 | - | 100 | 36 | 33WF130 | - | - | - | - | - | - | 165.0K | 767E | - | - | |
| 6037 | - | 100 | 36 | 33WF220 | - | - | - | - | - | - | 126.0K | 767E | - | - | |
| 6038 | - | 100 | 36 | 12B19 | - | - | - | - | - | - | 26.5K | 26.5K | - | - | |
| 6039 | - | 100 | 36 | 16WF50 | - | - | - | - | - | - | 515E | 515E | - | - | X |
| 6040 | - | 100 | 36 | 16WF50 | - | - | - | - | - | - | 515E | 35.3K | - | - | |
| 6041 | - | 100 | 36 | 12WF36 | - | - | - | - | - | - | 26.5K | 26.5K | - | - | |
| 6042 | - | 100 | 36 | 24I79.9 | - | - | - | - | - | - | 202B | 234C | - | - | |
| 6043 | - | 100 | 36 | 24I90.0 | - | - | - | - | - | - | 234C | 234C | - | - | |
| 6044 | - | 100 | 36 | 24179.9 | - | - | - | - | - | - | 234C | 234C | - | - | |
| 6045 | - | 100 | 36 | 24190.0 | - | - | - | - | - | - | 234C | 234A | - | - | |
| 6046 | - | 100 | 36 | 12WF53 | - | - | - | - | - | - | 111C | 111C | - | - | |
| 6047 | - | 100 | 50 | 24WF68 | - | - | - | - | - | - | 102C | 102C | - | - | |
| 6048 | - | 100 | 36 | 10WF21 | - | - | - | - | - | - | 26.5K | 26.5K | - | - | |
| 6049 | - | 100 | 36 | 12WF31 | - | - | - | - | - | - | 107A | 107A | - | - | |
| 6050 | - | 100 | 36 | 12WF31 | - | - | - | - | - | - | 107A | 751D | - | - | |
| 6051 | - | 100 | 36 | 12WF27 | - | - | - | - | - | - | 26.5K | 760B | - | - | |
| 6052 | - | 100 | 50 | 24WF76 | - | - | - | - | - | - | 767D | 70.0K | - | - | |
| 6053 | - | 100 | 36 | 10WF21 | - | - | - | - | - | - | 760A | 1C18 | - | - | |
| 6054 | - | 100 | 36 | 10WF21 | - | - | - | - | - | - | 760A | 17.4K | - | - | |
| 6055 | - | 100 | 36 | 10B15 | - | - | - | - | - | - | 26.5K | 760E | - | - | |
| 6056 | - | 100 | 36 | 12WF50 | - | - | - | - | - | - | 47.1K | 47.1K | - | - | |
| 6057 | - | 100 | 36 | 12WF50 | - | - | - | - | - | - | 47.1K | 391A | - | - | |
| 6058 | - | 100 | 36 | 18I70.0 | - | - | - | - | - | - | 391A | 53.0K | - | - | |
| 6059 | - | 100 | 36 | 24WF68 | - | - | - | - | - | - | 102C | 53.0K | - | - | |
| 6060 | - | 100 | 36 | 10WF21 | - | - | - | - | - | - | 770A | 101C | - | - | |
| 6061 | - | 100 | 36 | 16B31 | - | - | - | - | - | - | 254B | 364L | - | - | 1 |
| 6062 | - | 100 | 36 | 12WF31 | - | - | - | - | - | - | 107A | 760F | - | - | |
| 6063 | - | 100 | 50 | 21WF62 | - | - | - | - | - | - | 53.0K | 102C | - | - | |
| 6064 | - | 100 | 36 | 16WF36 | - | - | - | - | - | - | 102C | 102C | - | - | |
| 6065 | - | 100 | 36 | 12WF92 | - | - | - | - | - | - | 760B | 47.1K | - | - | |
| 6066 | - | 100 | 50 | 21WF55 | - | - | - | - | - | - | 102C | 53.0K | - | - | |

REMARKS

1 DETAIL 205Z, INTERMEDIATE SUPPORT OF BEAM

LICENSED PROFESSIONAL ENGINEER — LESLIE E. ROBERTSON — No. 34360 — UNIVERSITY OF THE STATE OF NEW YORK

**SKILLING, HELLE, CHRISTIANSEN, ROBERTSON** — Structural & Civil Engineers

PROJECT: THE WORLD TRADE CENTER | TITLE: BEAM SCHEDULE TOWERS A AND B | DATE: 12/ 6/68

REVISIONS

| BEAM NO. | SIZE | TYPE | FY | SHAPE | PLATE 1 WIDTH | PLATE 1 THICK | PLATE 2 WIDTH | PLATE 2 THICK | DIMENSIONS LENGTH | DIMENSIONS DIM. A | SUPPORTS LEFT | SUPPORTS RIGHT | STUDS NO. | STUDS SIZE | REMARKS |
|---|---|---|---|---|---|---|---|---|---|---|---|---|---|---|---|
| 6067 | - | 100 | 50 | 21WF55 | - | - | - | - | - | - | 53.0K | 102C | - | - | |
| 6068 | - | 100 | 50 | 12WF50 | - | - | - | - | - | - | 102B | 752B | - | - | |
| 6069 | - | 100 | 36 | 12WF27 | - | - | - | - | - | - | 111M | 26.5K | - | - | |
| 6070 | - | 100 | 36 | 10WF21 | - | - | - | - | - | - | 760A | 17.4K | - | - | |
| 6071 | - | 100 | 36 | 12WF36 | - | - | - | - | - | - | 26.5K | 111A | - | - | |
| 6072 | - | 100 | 36 | 16B31 | - | - | - | - | - | - | 364L | 220E | - | - | |
| 6073 | - | 100 | 36 | 8B13 | - | - | - | - | - | - | 771B | 17.4K | - | - | |
| 6074 | - | 100 | 50 | [illegible] | - | - | - | - | - | - | 53.0K | 757B | - | - | |
| 6075 | - | 100 | 36 | 12WF96 | - | - | - | - | - | - | 26.5K | 111A | - | - | |
| 6076 | - | 100 | 36 | 12WF72 | - | - | - | - | - | - | 370L | 317A | - | - | |
| 6077 | - | 100 | 36 | 12WF65 | - | - | - | - | - | - | 445A | 445A | - | - | |
| 6078 | - | 100 | 36 | 12WF65 | - | - | - | - | - | - | 317A | 317A | - | - | |
| 6079 | - | 100 | 36 | 12WF65 | - | - | - | - | - | - | 445A | 445A | - | - | |
| 6080 | - | 100 | 36 | 12WF72 | - | - | - | - | - | - | 317A | 370L | - | - | |
| 6081 | - | 100 | 36 | 12WF36 | - | - | - | - | - | - | 364B | 364B | - | - | |
| 6082 | - | 100 | 36 | 12WF45 | - | - | - | - | - | - | 47.1K | 47.1K | - | - | |
| 6083 | - | 100 | 36 | 12WF27 | - | - | - | - | - | - | 348A | 111H | - | - | |
| 6084 | - | 100 | 36 | 12WF27 | - | - | - | - | - | - | 348C | 283Y | - | - | |
| 6085 | - | 100 | 36 | 12WF27 | - | - | - | - | - | - | 26.5K | 111H | - | - | |
| 6086 | - | 100 | 36 | 12WF50 | - | - | - | - | - | - | 70.7K | 70.7K | - | - | |
| 6087 | - | 100 | 36 | 12WF45 | - | - | - | - | - | - | 283L | 54.1K | - | - | |
| 6088 | - | 100 | 36 | 12WF31 | - | - | - | - | - | - | 26.5K | 757B | - | - | |
| 6089 | - | 100 | 36 | 18WF50 | - | - | - | - | - | - | 303A | 310F | - | - | |
| 6090 | - | 100 | 36 | 12WF27 | - | - | - | - | - | - | 283Y | 349B | - | - | |
| 6091 | - | 100 | 36 | 12WF27 | - | - | - | - | - | - | 111H | 26.5K | - | - | |
| 6092 | - | 100 | 36 | 16WF40 | - | - | - | - | - | - | 723A | 710A | - | - | |
| 6093 | - | 100 | 36 | 12WF31 | - | - | - | - | - | - | 111A | 26.5K | - | - | |
| 6094 | - | 100 | 36 | 14WF30 | - | - | - | - | - | - | 102C | 26.5K | - | - | |
| 6095 | - | 100 | 36 | 10WF21 | - | - | - | - | - | - | 750A | 26.5K | - | - | |
| 6096 | - | 100 | 36 | 18WF50 | - | - | - | - | - | - | 472C | 472A | - | - | |
| 6097 | - | 100 | 50 | 27WF84 | - | - | - | - | - | - | 101C | 101C | - | - | |
| 6098 | - | 100 | 50 | 21WF55 | - | - | - | - | - | - | 101C | 53.0K | - | - | |
| 6099 | - | 100 | 36 | 18170.0 | - | - | - | - | - | - | 391C | 391B | - | - | |

LICENSED PROFESSIONAL ENGINEER ★ LESLIE E. ROBERTSON ★ No. 34310 ★ UNIVERSITY OF THE STATE OF NEW YORK

5-AB1-183

**SKILLING, HELLE, CHRISTIANSEN, ROBERTSON** — **Structural & Civil Engineers**

PROJECT: THE WORLD TRADE CENTER | TITLE: BEAM SCHEDULE TOWERS A AND B | DATE: 12/ 6/68

REVISIONS

| BEAM NO. | SIZE | TYPE | FY | SHAPE | PLATE 1 WIDTH | PLATE 1 THICK | PLATE 2 WIDTH | PLATE 2 THICK | DIMENSIONS LENGTH | DIMENSIONS DIM. A | SUPPORTS LEFT | SUPPORTS RIGHT | STUDS NO. | STUDS SIZE | REMARKS |
|---|---|---|---|---|---|---|---|---|---|---|---|---|---|---|---|
| 6100 | - | 100 | 50 | 33WF118 | - | - | - | - | - | - | 101C | 101C | - | - | |
| 6101 | - | 100 | 36 | 18WF45 | - | - | - | - | - | - | 101C | 35.3K | - | - | |
| 6102 | - | 100 | 36 | 16WF36 | - | - | - | - | - | - | 101C | 101C | - | - | |
| 6103 | - | 100 | 50 | 12WF53 | - | - | - | - | - | - | 53.0K | 53.0K | - | - | |
| 6104 | - | 100 | 36 | 12WF36 | - | - | - | - | - | - | 102B | 102B | - | - | |
| 6105 | - | 100 | 36 | 12WF40 | - | - | - | - | - | - | 26.5K | 751B | - | - | X |
| 6106 | - | 100 | 50 | 12WF53 | - | - | - | - | - | - | 53.0K | 53.0K | - | - | |
| 6107 | - | 100 | 50 | 12WF92 | - | - | - | - | - | - | 102B | 102B | - | - | |
| 6108 | - | 100 | 50 | 12WF99 | - | - | | - | - | - | 756B | 54.1K | - | - | |
| 6109 | - | 100 | 50 | 12WF45 | - | - | - | | - | - | 101B | 53.0K | - | - | |
| 6110 | - | 100 | 50 | 12WF85 | - | - | - | - | - | - | 757B | 101B | - | - | |
| 6111 | - | 100 | 36 | 10WF21 | - | - | - | - | - | - | 774E | 102B | - | - | |
| 6112 | - | 100 | 36 | 12WF45 | - | - | - | - | - | - | 774A | 101B | - | - | |
| 6113 | - | 100 | 36 | 12WF27 | - | - | - | - | - | - | 334B | 349A | - | - | |
| 6114 | - | 100 | 36 | 12WF50 | - | - | - | - | - | - | 353B | 334A | - | - | |
| 6115 | - | 100 | 36 | 12WF53 | - | - | - | - | - | - | 111A | 111A | - | - | |
| 6116 | - | 100 | 36 | 12WF50 | - | - | - | - | - | - | 334A | 353B | - | - | |
| 6117 | 16X5-1/2BX | 201 | 36 | — | 4 | 3/8 | 16 | 3/4 | - | - | 450 | 206B | - | - | |
| 6118 | - | 100 | 36 | 16WF50 | - | - | - | - | - | - | 515F | 515E | - | - | |
| 6119 | - | 100 | 36 | 16WF45 | - | - | - | - | - | - | 220H | 205D | - | - | |
| 6120 | - | 100 | 36 | 12WF40 | - | - | - | - | - | - | 391C | 47.1K | - | - | |
| 6121 | - | 100 | 36 | 12WF50 | - | - | - | - | - | - | 334B | 353A | - | - | |
| 6122 | - | 100 | 36 | 8WF58 | - | - | - | - | - | - | 515B | 515F | - | - | |
| 6123 | - | 100 | 36 | 12WF50 | - | - | - | - | - | - | 353A | 353B | - | - | |
| 6124 | - | 100 | 50 | 12WF58 | - | - | - | - | - | - | 53.0K | 102B | - | - | |
| 6125 | - | 100 | 36 | 8WF58 | - | - | - | - | - | - | 515F | 515B | - | - | |
| 6126 | - | 100 | 36 | 12WF50 | - | - | - | - | - | - | 353B | 353A | - | - | |
| 6127 | - | 100 | 50 | 12WF79 | - | - | - | - | - | - | 172A | 751D | - | - | |
| 6128 | - | 100 | 36 | 10WF21 | - | - | - | - | - | - | 760A | 17.4K | - | - | |
| 6129 | - | 100 | 50 | 24WF68 | - | - | - | - | - | - | 53.0K | 102C | - | - | |
| 6130 | - | 700 | 36 | 12WF27 | 8 1/2 | 1/2 | - | - | SEE SUPT. DET. | | 738A | 739 | 36 | 3/4X3 | |
| 6131 | - | 700 | 36 | 12WF27 | 8-1/2 | 1/2 | - | - | SEE SUPT. DET. | | 739 | 736A | 22 | 3/4X3 | |
| 6132 | - | 700 | 50 | 14WF34 | 8-3/4 | 1/2 | - | - | SEE SUPT. DET. | | 739 | 739 | 36 | 3/4X3 | |
| 6133 | - | 700 | 50 | 16WF36 | 9 | 1/2 | - | - | SEE SUPT. DET. | | 739 | 739 | 48 | 3/4X3 | |

LICENSED PROFESSIONAL ENGINEER ★ LESLIE E. ROBERTSON ★ No. 34360 ★ UNIVERSITY OF THE STATE OF NEW YORK

A-ABL-104

**SKILLING-HELLE-CHRISTIANSEN-ROBERTSON** — **Civil & Structural Engineers**

PROJECT: THE WORLD TRADE CENTER | TITLE: BEAM SCHEDULE TOWERS A AND B | DATE: 3/11/68

REVISIONS

| BEAM NO. | SIZE | TYPE | FY | SHAPE | PLATE 1 WIDTH | PLATE 1 THICK | PLATE 2 WIDTH | PLATE 2 THICK | DIMENSIONS LENGTH | DIMENSIONS DIM. A | SUPPORTS LEFT | SUPPORTS RIGHT | STUDS NO. | STUDS SIZE | REMARKS |
|---|---|---|---|---|---|---|---|---|---|---|---|---|---|---|---|
| 6134 | - | 700 | 50 | 16WF36 | 9 | 1/2 | - | - | SEE SUPT. DET. | | 733A | 739 | 48 | 3/4X3 | |
| 6135 | - | 700 | 50 | 16WF36 | 9 | 1/2 | - | - | SEE SUPT. DET. | | 780A | 728A | 48 | 3/4X3 | |
| 6136 | - | 700 | 50 | 16WF36 | 9 | 1/2 | - | - | SEE SUPT. DET. | | 728A | 729A | 48 | 3/4X3 | |
| 6137 | - | 700 | 50 | 14WF34 | 8-3/4 | 1/2 | - | - | SEE SUPT. DET. | | 729A | 731A | 36 | 3/4X3 | |
| 6138 | - | 700 | 50 | 14WF34 | 8-3/4 | 1/2 | - | - | SEE SUPT. DET. | | 728A | 739 | 36 | 3/4X3 | |
| 6139 | - | 700 | 50 | 18WF60 | 9-1/2 | 1/2 | - | - | SEE SUPT. DET. | | 731A | 702 | 82 | 3/4X3 | X |
| 6140 | - | 700 | 50 | 16WF36 | 9 | 1/2 | - | - | SEE SUPT. DET. | | 735A | 728A | 42 | 3/4X3 | |
| 6141 | - | 700 | 50 | 18WF50 | 9 | 1/2 | - | - | SEE SUPT. DET. | | 733C | 739 | 62 | 3/4X3 | |
| 6142 | - | 700 | 50 | 14WF30 | 8-3/4 | 1/2 | - | - | SEE SUPT. DET. | | 739 | 739 | 40 | 3/4X3 | |
| 6143 | - | 700 | 50 | 18WF50 | 9 | 1/2 | - | - | SEE SUPT. DET. | | 729A | 729A | 60 | 3/4X3 | |
| 6144 | - | 700 | 50 | 18WF50 | 9 | 1/2 | - | - | SEE SUPT. DET. | | 733C | 729A | 62 | 3/4X3 | |
| 6145 | - | 700 | 50 | 14WF30 | 8-3/4 | 1/2 | - | - | SEE SUPT. DET. | | 729A | 739 | 40 | 3/4X3 | |
| 6146 | - | 700 | 50 | 16WF45 | 9 | 1/2 | - | - | SEE SUPT. DET. | | 739 | 739 | 56 | 3/4X3 | |
| 6147 | - | 700 | 36 | 14WF30 | 8 3/4 | 1/2 | - | - | SEE SUPT. DET. | | 739 | 739 | 36 | 3/4X3 | |
| 6148 | - | 700 | 36 | 18WF50 | 9 | 1/2 | - | - | SEE SUPT. DET. | | 739 | 729A | 42 | 3/4X3 | |
| 6149 | - | 700 | 36 | 18WF45 | 9 | 1/2 | - | - | SEE SUPT. DET. | | 728A | 782A | 40 | 3/4X3 | |
| 6150 | - | 700 | 50 | 16WF45 | 9 | 1/2 | - | - | SEE SUPT DET. | | 729A | 733A | 56 | 3/4X3 | |
| 6151 | - | 100 | 36 | 6WF25 | - | - | - | - | - | - | 26.5K | - | 25 | 3/4X3 | 1 |
| 6152 | - | 100 | 36 | 8B13 | - | - | - | - | - | - | 170G 17.4K | | - | - | |
| 6153 | - | 700 | 50 | 18WF77 | 10 3/4 | 1/2 | - | - | SEE SUPT. DET. | | 702B | 780B | 88 | 3/4X3 | |
| 6154 | - | 700 | 50 | 16WF40 | 9 | 1/2 | - | - | SEE SUPT. DET. | | 739 | 736D | 52 | 3/4X3 | |
| 6155 | - | 700 | 50 | 16WF45 | 9 | 1/2 | - | - | SEE SUPT DET. | | 731 A | 729 A | 56 | 3/4X3 | |
| 6156 | - | 700 | 50 | 16WF36 | 9 | 1/2 | - | - | SEE SUPT. DET. | | 739 | 739 | 48 | 3/4X3 | |
| 6157 | - | 100 | 36 | 12WF27 | 8-1/2 | 1/2 | - | - | SEE SUPT DET. | | 781A | 739 | 36 | 3/4X3 | |
| 6158 | - | 700 | 50 | 16WF36 | 9 | 1/2 | - | - | SEE SUPT DET. | | 739 | 728B | 48 | 3/4X3 | |
| 6159 | - | 700 | 50 | 16WF36 | 9 | 1/2 | - | - | SEE SUPT DET. | | 728A | 739 | 48 | 3/4X3 | |
| 6160 | - | 100 | 36 | 14WF34 | - | - | - | - | - | - | 26.5K | 768C | - | - | |
| 6161 | - | 100 | 36 | 14WF34 | - | - | - | - | - | - | 26.5K | 767D | - | - | |
| 6162 | - | 100 | 36 | 10WF21 | - | - | - | - | - | - | 770A | 26.5K | - | - | |
| 6163 | - | 100 | 36 | 12WF27 | - | - | - | - | - | - | 102B | 102B | - | - | |
| 6164 | - | 463 | 50 | 12WF58 | - | - | - | - | - | - | 54.1K | 760D | - | - | |
| 6165 | - | 700 | 36 | 12WF27 | 8-1/2 | 1/2 | - | - | SEE SUPT. DET. | | 737A | 729A | 36 | 3/4X3 | |
| 6166 | - | 700 | 50 | 18WF55 | 9-1/2 | 1/2 | - | - | SEE SUPT. DET. | | 739 | 731A | 64 | 3/4X3 | |

REMARKS

1 SEE 6-85-105.1 FOR RIGHT END OF BEAM

LICENSED PROFESSIONAL ENGINEER — LESLIE E. ROBERTSON — No. 34360 — STATE OF NEW YORK

5-AB1-165

**SKILLING, HELLE, CHRISTIANSEN, ROBERTSON** — **Structural & Civil Engineers**

PROJECT: THE WORLD TRADE CENTER | TITLE: BEAM SCHEDULE TOWERS A AND B | DATE: 12/ 6/68

REVISIONS

| BEAM NO. | SIZE | TYPE | FY | SHAPE | PLATE 1 WIDTH | PLATE 1 THICK | PLATE 2 WIDTH | PLATE 2 THICK | DIMENSIONS LENGTH | DIMENSIONS DIM. A | SUPPORTS LEFT | SUPPORTS RIGHT | STUDS NO. | STUDS SIZE | REMARKS |
|---|---|---|---|---|---|---|---|---|---|---|---|---|---|---|---|
| 6167 | - | 700 | 36 | 12WF27 | 8-1/2 | 1/2 | - | - | SEE SUPT. DET. | | 739 | 728A | 36 | 3/4X3 | |
| 6168 | - | 100 | 50 | 12WF92 | - | - | - | - | - | - | 90.2K | 760B | - | - | |
| 6169 | - | 100 | 36 | 12WF50 | - | - | - | - | - | - | 353A | 334B | - | - | |
| 6170 | - | 700 | 36 | 12WF27 | 8-1/2 | 1/2 | - | - | SEE SUPT. DET. | | 728A | 739 | 36 | 3/4X3 | |
| 6171 | - | 100 | 36 | 12WF27 | - | - | - | - | - | - | 111H | 111H | - | - | |
| 6172 | - | 100 | 50 | 12WF106 | - | - | - | - | - | - | 70.7K | 760G | - | - | X |
| 6173 | - | 700 | 50 | 16WF40 | 9 | 1/2 | - | - | SEE SUPT. DET. | | 728B | 728A | 52 | 3/4X3 | |
| 6174 | - | 100 | 50 | 12WF79 | - | - | - | - | - | - | 760B | 101B | - | - | |
| 6175 | - | 700 | 36 | 12WF27 | 8-1/2 | 1/2 | - | - | SEE SUPT. DET. | | 736A | 739 | 36 | 3/4X3 | |
| 6176 | - | 100 | 50 | 12WF79 | - | - | - | - | - | - | 761B | 101B | - | - | |
| 6177 | - | 700 | 50 | 16WF36 | 9 | 1/2 | - | - | SEE SUPT. DET. | | 729A | 728A | 48 | 3/4X3 | |
| 6178 | - | 700 | 50 | 18WF85 | 10-3/4 | 1/2 | - | - | SEE SUPT. DET. | | 709D | 736C | 90 | 3/4X3 | |
| 6179 | - | 700 | 50 | 18WF85 | 10-3/4 | 1/2 | - | - | SEE SUPT. DET. | | 736C | 709C | 90 | 3/4X3 | |
| 6180 | - | 100 | 36 | 16B31 | - | - | - | - | - | - | 254B | 391G | - | - | |
| 6181 | - | 100 | 36 | 16B31 | - | - | - | - | - | - | 391G | 220G | - | - | |
| 6182 | 16X5-1/2BX | 203 | 36 | - | 3-3/4 | 3/8 | 16 | 7/8 | - | - | 391G | 206B | - | - | |
| 6183 | - | 100 | 36 | 12WF27 | - | - | - | - | - | - | 26.5K | 26.5K | - | - | |
| 6184 | - | 100 | 36 | 12B 19 | - | - | - | - | - | - | 17.4K | 17.4K | - | - | |
| 6185 | - | 100 | 50 | 16WF40 | - | - | - | - | - | - | 70.7K | 70.7K | 52 | 3/4X3 | |
| 6186 | - | 100 | 50 | 12WF58 | - | - | - | - | - | - | 102B | 102B | - | - | |
| 6187 | - | 700 | 36 | 18WF4 | 9 | 1/2 | - | - | SEE SUPT. DET. | | 703 | 705C | 30 | 3/4X3 | |
| 6188 | - | 700 | 36 | 16WF36 | 9 | 1/2 | - | - | SEE-SUPT. DET. | | 703D | 703D | 48 | 3/4X3 | |
| 6189 | - | 100 | 36 | 16WF36 | - | - | - | - | - | - | 703D | 702B | 30 | 3/4X3 | |
| 6190 | - | 700 | 50 | 18WF45 | 9-1/2 | 1/2 | - | - | SEE SUPT. DET. | | 702 | 703 | 58 | 3/4X3 | |
| 6191 | - | 700 | 50 | 18WF45 | 9-1/2 | 1/2 | - | - | SEE SUPT. DET. | | 703 | 703 | 58 | 3/4X3 | |
| 6192 | - | 700 | 50 | 18WF45 | 9-1/2 | 1/2 | - | - | SEE SUPT. DET. | | 703 | 703A | 58 | 3/4X3 | |
| 6193 | - | 700 | 50 | 18WF45 | 9-1/2 | 1/2 | - | - | SEE SUPT. DET. | | 703A | 703 | 58 | 3/4X3 | |
| 6194 | - | 700 | 50 | 18WF45 | 9-1/2 | 1/2 | - | - | SEE SUPT. DET. | | 705C | 705C | 58 | 3/4X3 | |
| 6195 | - | 700 | 36 | 18WF45 | 9-1/2 | 1/2 | - | - | SEE SUPT. DET. | | 703A | 703A | 30 | 3/4X3 | |
| 6196 | - | 100 | 50 | 21WF62 | - | - | - | - | - | - | 48.1K | 772A | - | - | |
| 6197 | - | 100 | 36 | 12B 19 | - | - | - | - | - | - | 111W | 111W | - | - | |
| 6198 | - | 100 | 36 | 12B 19 | - | - | - | - | - | - | 111W | 26.5K | - | - | |
| 6199 | - | 100 | 50 | 21WF62 | - | - | - | - | - | - | 101C | 767A | - | - | |

LICENSED PROFESSIONAL ENGINEER
LESLIE E. ROBERTSON
No. 34360
UNIVERSITY OF T... YORK

**SKILLING-HELLE-CHRISTIANSEN-ROBERTSON** — Civil & Structural Engineers

PROJECT: THE WORLD TRADE CENTER | TITLE: BEAM SCHEDULE TOWERS A AND B | DATE: 3/11/68

REVISIONS

| BEAM NO. | SIZE | TYPE | FY | SHAPE | PLATE 1 WIDTH | PLATE 1 THICK | PLATE 2 WIDTH | PLATE 2 THICK | DIMENSIONS LENGTH | DIMENSIONS DIM. A | SUPPORTS LEFT | SUPPORTS RIGHT | STUDS NO. | STUDS SIZE | REMARKS |
|---|---|---|---|---|---|---|---|---|---|---|---|---|---|---|---|
| 200 | - | 100 | 36 | 12WF27 | - | - | - | - | - | - | 26.5K | 26.5K | - | - | |
| 6201 | - | 100 | 50 | 18WF50 | - | - | - | - | - | - | 53.0K | [illegible]767C | - | - | |
| *202 | - | 100 | 36 | 10WF21 | - | - | - | - | - | - | 751A | 101B | - | - | |
| 203 | - | 100 | 36 | 12WF79 | - | - | - | - | - | - | 363A | 17.4K | - | - | |
| 6204 | - | 100 | 36 | 12WF40 | - | - | - | - | - | - | 101B | 101B | - | - | |
| 6205 | - | 100 | 36 | 12WF45 | - | - | - | - | - | - | 101B | 101B | - | - | |
| 6206 | - | 100 | 36 | [illegible] | - | - | - | - | - | - | 752B | 35.3K | - | - | |
| 6207 | - | 100 | 36 | [illegible] | - | - | - | - | - | - | 35.3K | [illegible] | - | - | |
| 6208 | - | 100 | 36 | [illegible] | - | - | - | - | - | - | 35.3K | 35.3K | - | - | |
| 6209 | - | 100 | 50 | 12WF85 | - | - | - | - | - | - | 102B | 111B | - | - | |
| *210 | - | 100 | 36 | 12WF58 | - | - | - | - | - | - | 102B | 102B | - | - | |
| *211 | - | 100 | 36 | 12WF58 | - | - | - | - | - | - | 102B | 102B | - | - | |
| *212 | - | 100 | 50 | 12WF92 | - | - | - | - | - | - | 752B | 54.1K | - | - | |
| *213 | - | 100 | 50 | 12WF92 | - | - | - | - | - | - | 751B | 101B | - | - | |
| 6214 | - | 100 | 50 | 12WF58 | - | - | - | - | - | - | 53.0K | 53.0K | - | - | |
| 6215 | - | 100 | 50 | 12WF58 | - | - | - | - | - | - | 101B | 53.0K | - | - | |
| 6216 | - | 100 | 50 | 12WF85 | - | - | - | - | - | - | 102B | 102B | - | - | |
| 6217 | - | 100 | 36 | 12WF40 | - | - | - | - | - | - | 751B | 101B | - | - | |
| 6218 | - | 100 | 50 | 12WF79 | - | - | - | - | - | - | 101B | 101B | - | - | |
| 6219 | - | 100 | 36 | 12WF40 | - | - | - | - | - | - | 101B | 35.3K | - | - | |
| 6220 | - | 100 | 36 | 12B 19 | - | - | - | - | - | - | 508 | 26.5K | - | - | |
| 6221 | - | 100 | 50 | [illegible] | - | - | - | - | - | - | 101C | [illegible] | - | - | |
| 6222 | - | 100 | 50 | [illegible] | - | - | - | - | - | - | [illegible] | [illegible] | - | - | |
| 6223 | - | 100 | 50 | [illegible] | - | - | - | - | - | - | 26.5K | [illegible] | - | - | |
| 6224 | - | 100 | 50 | [illegible] | - | - | - | - | - | - | 101C | [illegible] | - | - | |
| 6225 | - | 100 | 36 | 12B 19 | - | - | - | - | - | - | 26.5K | 26.5K | - | - | |
| 6226 | - | 100 | 36 | 12B 19 | - | - | - | - | - | - | 508 | 508 | - | - | |
| 6227 | - | 100 | 36 | 8B 13 | - | - | - | - | - | - | 771B | 454B | - | - | |
| 6228 | - | 100 | 36 | 8B 13 | - | - | - | - | - | - | 509D | 783A | - | - | |
| 6229 | - | 100 | 36 | 12B 22 | - | - | - | - | - | - | 26.5K | 26.5K | - | - | |
| 6230 | - | 100 | 50 | 21WF62 | - | - | - | - | - | - | 70.0K | 70.0K | - | - | |
| 6231 | - | 100 | 50 | 21WF62 | - | - | - | - | - | - | 70.0K | 101C | - | - | |
| 6232 | - | 100 | 50 | 21WF68 | - | - | - | - | - | - | 70.0K | 101C | - | - | |
| 6233 | - | 100 | 50 | 21WF68 | - | - | - | - | - | - | 70.0K | 70.0K | - | - | |

REMARKS

* HOLD

LICENSED PROFESSIONAL ENGINEER — LESLIE E. ROBERTSON — NO. 34360 — STATE OF NEW YORK

5-A81-187

**SKILLING, HELLE, CHRISTIANSEN, ROBERTSON** — **Structural & Civil Engineers**

PROJECT: THE WORLD TRADE CENTER | TITLE: BEAM SCHEDULE TOWERS A AND B | DATE: 12/ 6/66

REVISIONS

| BEAM NO. | SIZE | TYPE | FY | PLATE 1 SHAPE | PLATE 1 WIDTH | PLATE 1 THICK | PLATE 2 WIDTH | PLATE 2 THICK | DIMENSIONS LENGTH | DIMENSIONS DIM. A | SUPPORTS LEFT | SUPPORTS RIGHT | STUDS NO. | STUDS SIZE | REMARKS |
|---|---|---|---|---|---|---|---|---|---|---|---|---|---|---|---|
| 6234 | - | 100 | 50 | 24WF68 | - | - | - | - | - | - | 102C | 102C | - | - | |
| 6235 | - | 100 | 50 | 24WF68 | - | - | - | - | - | - | 102C | 102C | - | - | |
| 6236 | - | 100 | 50 | 24WF68 | - | - | - | - | - | - | 53.0K | 102C | - | - | |
| 6237 | - | 100 | 50 | 33WF118 | - | - | - | - | - | - | 102C | 102C | - | - | |
| 6238 | - | 100 | 36 | 16WF36 | - | - | - | - | - | - | 102C | 102C | - | - | |
| 6239 | - | 100 | 50 | 24WF68 | - | - | - | - | - | - | 102C | 53.0K | - | - | X |
| 6240 | - | 100 | 36 | 16B31 | - | - | - | - | - | - | 254A | 391F | - | - | |
| 6241 | - | 100 | 50 | 12WF79 | - | - | - | - | - | - | 101B | 108C | - | - | |
| 6242 | - | 100 | 36 | 10WF21 | - | - | - | - | - | - | 752A | 26.5K | - | - | |
| 6243 | - | 100 | 36 | 16B31 | - | - | - | - | - | - | 391F | 220G | - | - | |
| 6244 | 16X5-1/2BX | 206 | 36 | - | 3-3/4 | 3/8 | 16 | 7/8 | - | - | 206A | 391F | - | - | |
| 6245 | - | 100 | 36 | 18WF55 | - | - | - | - | - | - | 205A | 205A | - | - | 1 |
| 6246 | - | 100 | 50 | 12WF99 | - | - | - | - | - | - | 111B | 751B | - | - | |
| 6247 | - | 100 | 36 | 18WF50 | - | - | - | - | - | - | 414A | 414A | - | - | |
| 6249 | - | 100 | 36 | 12WF40 | - | - | - | - | - | - | 101B | 101B | - | - | |
| 6250 | - | 100 | 36 | 8B 13 | - | - | - | - | - | - | 17.4K | 778A | - | - | |
| 6251 | 16X6-1/2BU | 300 | 36 | - | 6-1/2 | 1-1/8 | 13-3/4 | 3/8 | - | - | 220A | 348C | - | - | |
| 6252 | - | 100 | 36 | 12WF36 | - | - | - | - | - | - | 364H | 364H | - | - | |
| 6253 | - | 100 | 36 | 18WF55 | - | - | - | - | - | - | 391E | 220H | - | - | |
| 6254 | - | 100 | 36 | 12WF72 | - | - | - | - | - | - | 338C | 329A | - | - | |
| 6255 | - | 100 | 36 | 12WF27 | - | - | - | - | - | - | 349B | 364H | - | - | |
| 6256 | - | 100 | 36 | 12WF72 | - | - | - | - | - | - | 329A | 364B | - | - | |
| 6257 | - | 100 | 36 | 12WF72 | - | - | - | - | - | - | 364B | 364I | - | - | 3 |
| 6258 | - | 100 | 36 | 12WF65 | - | - | - | - | - | - | 364I | 364I | - | - | |
| 6259 | - | 100 | 36 | 12WF36 | - | - | - | - | - | - | 364I | 220L | - | - | |
| 6260 | - | 100 | 36 | 8B13 | - | - | - | - | - | - | 17.4K | 771B | - | - | |
| 6261 | - | 100 | 36 | 6B16 | - | - | - | - | - | - | 17.4K | 17.4K | - | - | |
| 6262 | - | 100 | 36 | 6B16 | - | - | - | - | - | - | 436A | 436A | - | - | |
| 6263 | - | 100 | 36 | 12WF31 | - | - | - | - | - | - | 435A | 503A | - | - | 2 |
| 6264 | - | 100 | 36 | 12WF40 | - | - | - | - | - | - | 101B | 101B | - | - | |
| 6265 | - | 100 | 36 | 12WF36 | - | - | - | - | - | - | 101B | 101B | - | - | |
| 6266 | - | 100 | 36 | 12WF50 | - | - | - | - | - | - | 756B | 35.3K | - | - | |

REMARKS

1 DETAIL 414A LEFT AND RIGHT END OF BEAM
2 RIGHT END OF BEAM SITS ON POST
3 DETAIL 329A INTERMEDIATE SUPPORT

LICENSED PROFESSIONAL ENGINEER ☆ LESLIE E. ROBERTSON ☆ No. 34360 ☆ UNIVERSITY OF THE STATE OF NEW YORK

5-APR-10

**SKILLING, HELLE, CHRISTIANSEN, ROBERTSON** — Structural & Civil Engineers

PROJECT: THE WORLD TRADE CENTER | TITLE: BEAM SCHEDULE TOWERS A AND B | DATE: 12/ 6/68

REVISIONS

| BEAM NO. | SIZE | TYPE | FY | SHAPE | PLATE 1 WIDTH | PLATE 1 THICK | PLATE 2 WIDTH | PLATE 2 THICK | DIMENSIONS LENGTH | DIMENSIONS DIM. A | SUPPORTS LEFT | SUPPORTS RIGHT | STUDS NO. | STUDS SIZE | REMARKS |
|---|---|---|---|---|---|---|---|---|---|---|---|---|---|---|---|
| 6267 | - | 100 | 36 | 12WF36 | - | - | - | - | - | - | 35.3K | 35.3K | - | - | |
| 6268 | - | 100 | 36 | 12WF31 | - | - | - | - | - | - | 26.5K | 26.5K | - | - | |
| 6269 | - | 100 | 50 | 12WF79 | - | - | - | - | - | - | 756B | 54.1K | - | - | |
| 6270 | - | 100 | 50 | 12WF79 | - | - | - | - | - | - | 757B | 101B | - | - | |
| 6271 | - | 100 | 50 | 12WF40 | - | - | - | - | - | - | 53.0K | 53.0K | - | - | |
| 6272 | - | 100 | 50 | 12WF40 | - | - | - | - | - | - | 101B | 53.0K | - | - | |
| 6273 | - | 100 | 50 | 12WF50 | - | - | - | - | - | - | 54.1K | 54.1K | - | - | |
| 6274 | - | 100 | 36 | 12WF40 | - | - | - | - | - | - | 101B | 101B | - | - | |
| 6275 | - | 100 | 50 | 12WF79 | - | - | - | - | - | - | 102B | 102B | - | - | |
| 6276 | - | 100 | 36 | 12WF50 | - | - | - | - | - | - | 102B | 102B | - | - | |
| 6277 | - | 100 | 36 | 12WF40 | - | - | - | - | - | - | 756B | 101B | - | - | |
| 6278 | - | 100 | 50 | 12WF72 | - | - | - | - | - | - | 101B | 101B | - | - | |
| 6279 | - | 100 | 36 | 12WF31 | - | - | - | - | - | - | 101B | 26.5K | - | - | |
| 6280 | - | 100 | 50 | 12WF85 | - | - | - | - | - | - | 102B | 172A | - | - | |
| 6281 | - | 100 | 36 | 16B31 | - | - | - | - | - | - | 395D | 265C | - | - | |
| 6282 | - | 100 | 50 | 36WF135 | - | - | - | - | - | - | 400A | 400A | - | - | |
| 6283 | - | 100 | 36 | 12WF31 | - | - | - | - | - | - | 400A | 326A | - | - | |
| 6284 | - | 100 | 36 | 16WF40 | - | - | - | - | - | - | 364J | 220E | - | - | |
| 6285 | - | 100 | 36 | 16WF40 | - | - | - | - | - | - | 220E | 220L | - | - | |
| 6286 | - | 100 | 36 | 12B19 | - | - | - | - | | | 508 | 752A | - | - | |
| 6287 | - | 100 | 36 | 12WF79 | - | - | - | - | - | - | 364B | 205E | - | - | |
| 6288 | - | 100 | 36 | 12WF65 | - | - | - | - | - | - | 205E | 364I | - | - | 2 |
| 6289 | - | 100 | 36 | 12WF36 | - | - | - | - | - | - | 364I | 26.5K | - | - | |
| 6290 | - | 100 | 36 | 16WF36 | - | - | - | - | - | - | 101B | 101B | - | - | |
| 6291 | - | 100 | 50 | 12WF50 | - | - | - | - | - | - | 101B | 47.1K | - | - | |
| 6292 | - | 100 | 50 | 12WF50 | - | - | - | - | - | - | 760B | 36.1K | - | - | |
| 6293 | - | 100 | 36 | 12WF36 | - | - | - | - | - | - | 26.5K | 26.5K | - | - | |
| 6294 | - | 100 | 36 | 12WF31 | - | - | - | - | - | - | 26.5K | 26.5K | - | - | |
| 6295 | - | 100 | 50 | 12WF79 | - | - | - | - | - | - | 760B | 54.1K | - | - | |
| 6296 | - | 100 | 50 | 12WF106 | - | - | - | - | - | - | 761B | 101B | - | - | |
| 6297 | - | 100 | 50 | 12WF40 | - | - | - | - | - | - | 54.1K | 54.1K | - | - | |
| 6298 | - | 465 | 50 | 12WF58 | - | - | - | - | - | - | 101B | 54.1K | - | - | |
| 6299 | - | 461 | 50 | 12WF92 | - | - | - | - | - | - | 102B | 102B | - | - | |

REMARKS

2 DETAIL 443A, LEFT END OF BEAM

LICENSED PROFESSIONAL ENGINEER — LESLIE E. ROBERTSON — No. 34360 — UNIVERSITY OF THE STATE OF NEW YORK

5-A81-189

**SKILLING, HELLE, CHRISTIANSEN, ROBERTSON** — Structural & Civil Engineers

PROJECT: THE WORLD TRADE CENTER | TITLE: BEAM SCHEDULE TOWERS A AND B | DATE: 12/ 6/68

REVISIONS

| BEAM NO. | SIZE | TYPE | FY | SHAPE | PLATE 1 WIDTH | PLATE 1 THICK | PLATE 2 WIDTH | PLATE 2 THICK | DIMENSIONS LENGTH | DIMENSIONS DIM. A | SUPPORTS LEFT | SUPPORTS RIGHT | STUDS NO. | STUDS SIZE | REMARKS |
|---|---|---|---|---|---|---|---|---|---|---|---|---|---|---|---|
| 6300 | - | 100 | 36 | 12WF36 | - | - | - | - | - | - | 760B | 101B | - | - | |
| 6301 | - | 100 | 36 | 12WF72 | - | - | - | - | - | - | 101B | 101B | - | - | |
| 6302 | - | 100 | 36 | 12WF31 | - | - | - | - | - | - | 101B | 26.5K | - | - | |
| 6303 | - | 100 | 36 | 12WF65 | - | - | - | - | - | - | 515E | 35.3K | - | - | |
| 6304 | - | 100 | 36 | 12WF72 | - | - | - | - | - | - | 220H | 205B | - | - | |
| 6305 | - | 100 | 36 | 12WF58 | - | - | - | - | - | - | 445A | 445A | - | - | X |
| 6306 | - | 100 | 36 | 12WF72 | - | - | - | - | - | - | 205B | 220X | - | - | |
| 6307 | - | 100 | 36 | 12WF79 | - | - | - | - | - | - | 220B | 364K | - | - | 1 |
| 6308 | - | 100 | 36 | 12WF53 | - | - | - | - | - | - | 364K | 364K | - | - | |
| 6309 | - | 100 | 36 | 12WF36 | - | - | - | - | - | - | 364K | 220H | - | - | |
| 6310 | - | 100 | 36 | 12WF65 | - | - | - | - | - | - | 35.3K | 515E | - | - | |
| 6311 | - | 100 | 36 | 10WF21 | - | - | - | - | - | - | 761A | 102B | - | - | |
| 6312 | - | 100 | 36 | 10WF21 | - | - | - | - | - | - | 760 | 101 | - | - | |
| 6313 | - | 100 | 36 | 16WF36 | - | - | - | - | - | - | 767C | 101C | - | - | |
| 6314 | - | 100 | 36 | 16WF45 | - | - | - | - | - | - | 101C | 101C | - | - | |
| 6315 | - | 100 | 36 | 16WF36 | - | - | - | - | - | - | 101C | 101C | - | - | |
| 6316 | - | 100 | 36 | 16WF36 | - | - | - | - | - | - | 767C | 26.5K | - | - | |
| 6317 | - | 100 | 36 | 16WF40 | - | - | - | - | - | - | 35.3K | 35.3K | - | - | |
| 6318 | - | 100 | 36 | 14WF34 | - | - | - | - | - | - | 35.3K | 35.3K | - | - | |
| 6319 | - | 100 | 50 | 24WF76 | - | - | - | - | - | - | 767D | 70.0K | - | - | |
| 6320 | - | 100 | 50 | 24WF76 | - | - | - | - | - | - | 767D | 101C | - | - | |
| 6321 | - | 100 | 50 | 24WF68 | - | - | - | - | - | - | 767D | 70.0K | - | - | |
| 6322 | - | 100 | 50 | 18WF65 | - | - | - | - | - | - | 53.0K | 53.0K | - | - | |
| 6323 | - | 100 | 50 | 18WF46 | - | - | - | - | - | - | 101C | 53.0K | - | - | |
| 6324 | - | 100 | 50 | 18WF40 | - | - | - | - | - | - | 39.0K | 39.0K | - | - | |
| 6325 | - | 100 | 36 | 16WF36 | - | - | - | - | - | - | 767C | 101C | - | - | |
| 6326 | - | 100 | 50 | 12WF79 | - | - | - | - | - | - | 54.1K | 102B | - | - | |
| 6327 | - | 100 | 50 | 12WF99 | - | - | - | - | - | - | 102B | 102B | - | - | |
| 6328 | - | 100 | 50 | 21WF55 | - | - | - | - | - | - | 101C | 101C | - | - | |
| 6329 | - | 100 | 36 | 14WF34 | - | - | - | - | - | - | 101C | 35.3K | - | - | |
| 6330 | - | 100 | 50 | 12WF85 | - | - | - | - | - | - | 109A | 108B | - | - | |
| 6331 | - | 100 | 36 | 18WF55 | - | - | - | - | - | - | 102C | 102C | - | - | |
| 6332 | - | 100 | 36 | 18WF55 | - | - | - | - | - | - | 108C | 102C | - | - | |
| 6333 | - | 100 | 36 | 10WF21 | - | - | - | - | - | - | 770A | 26.5K | - | - | |

REMARKS

1 DETAIL 205B, INTERMEDIATE SUPPORT OF BEAM

LICENSED PROFESSIONAL ENGINEER — LESLIE E. ROBERTSON — No. 34360 — UNIVERSITY OF THE STATE OF NEW YORK

5-AB1-190

**SKILLING, HELLE, CHRISTIANSEN, ROBERTSON** — Structural & Civil Engineers

PROJECT: THE WORLD TRADE CENTER | TITLE: BEAM SCHEDULE TOWERS A AND B | DATE: 12/ 6/68

REVISIONS

| BEAM NO. | SIZE | TYPE | FY | SHAPE | PLATE 1 WIDTH | PLATE 1 THICK | PLATE 2 WIDTH | PLATE 2 THICK | DIMENSIONS LENGTH | DIMENSIONS DIM. A | SUPPORTS LEFT | SUPPORTS RIGHT | STUDS NO. | STUDS SIZE | REMARKS |
|---|---|---|---|---|---|---|---|---|---|---|---|---|---|---|---|
| 6334 | - | 100 | 36 | 10WF21 | - | - | - | - | - | - | 761 | 17.4K | - | - | |
| 6335 | - | 100 | 36 | 12WF45 | - | - | - | - | - | - | 761B | 101B | - | - | |
| 6336 | - | 100 | 50 | 12WF92 | - | - | - | - | - | - | B 760B | 101B | - | - | |
| 6337 | - | 100 | 50 | 12WF72 | - | - | - | | - | - | 47.1K | 102B | - | - | |
| 6338 | - | 100 | 36 | 16WF40 | - | - | - | - | - | - | 102C | 767C | - | - | |
| 6339 | - | 100 | 36 | 10WF21 | - | - | - | - | - | - | 775 | 101 | - | - | |
| 6340 | | 100 | 36 | 12WF50 | | | | | | | 760B | 101B | | | X |
| 6341 | - | 100 | 36 | 14WF30 | - | - | - | - | - | - | 26.5K | 26.5K | - | - | |
| 6342 | | 100 | 36 | 14WF30 | | | | | | | 26.5K | 102C | | | |
| 6343 | - | 100 | 36 | 8B13 | - | - | - | - | - | - | 17.4K | 17.4K | - | - | |
| 6344 | - | 100 | 36 | 10WF21 | - | - | - | - | - | - | 770A | 101C | - | - | |
| 6345 | - | 100 | 36 | 12WF31 | - | - | - | - | - | - | 26.5K | 760B | - | - | |
| 6346 | - | 100 | 50 | 12WF58 | - | - | - | - | - | - | 101B | 108B | - | | |
| 6347 | - | 100 | 36 | 12WF36 | - | - | | | - | - | 102B | 102B | - | | |
| 6348 | - | 100 | 50 | 24WF76 | - | - | - | - | - | - | 172A | 772B | - | - | |
| 6349 | - | 100 | 50 | 12WF53 | - | - | - | - | - | - | 107A | 39.8K | - | | |
| 6350 | - | 100 | 36 | 12B 16.5 | - | - | - | - | - | - | 26.5K | 26.5K | - | - | |
| 6351 | - | 100 | 36 | 12WF50 | - | - | - | - | - | - | 39.8K | 39.8K | - | - | |
| 6352 | - | 100 | 36 | 12B19 | - | - | - | - | - | - | 26.5K | 26.5K | - | - | |
| 6353 | - | 100 | 36 | 12WF40 | - | - | - | - | - | - | 36.1K | 107A | - | - | |
| 6354 | - | 100 | 36 | 12WF36 | - | - | - | - | - | - | 102B | 26.5K | - | | |
| 6355 | - | 100 | 50 | 21WF55 | - | - | - | - | - | - | 53.0K | 53.0K | - | - | |
| 6356 | - | 100 | 50 | 18WF53 | - | - | - | - | - | - | 39.8K | 102B | - | - | |
| 6357 | - | 100 | 50 | 12WF53 | - | - | - | - | - | - | 39.8K | 39.8K | - | - | |
| 6358 | - | 100 | 50 | 12WF58 | - | - | - | - | - | - | 108A | 101B | - | - | |
| 6359 | - | 100 | 36 | 12WF53 | - | - | - | - | - | - | 101B | 39.8K | - | - | |
| 6360 | - | 100 | 36 | 12WF31 | - | - | - | - | - | - | 101B | 36.1K | - | - | |
| 6361 | - | 100 | 36 | 12WF36 | - | - | - | - | - | - | 26.5K | 26.5K | - | - | |
| 6362 | - | 100 | 36 | 18WF45 | - | - | - | - | - | - | 220H | 205A | - | - | |
| 6363 | - | 700 | 36 | 16WF36 | 9 | 1/2 | - | - | SEE SUPT. | DET. | 707A | 706A | 48 | 3/4X3 | |
| 6364 | - | 100 | 36 | 18WF45 | - | - | - | - | - | - | 205A | 205A | - | - | 1 |
| 6365 | - | 100 | 36 | 18WF45 | - | - | - | - | - | - | 205A | 205A | - | - | |
| 6366 | 16X6-BU | 300 | 36 | - | 6 | 1 | 14 | 1/2 | - | - | 720 | 719 | - | - | 2 |

REMARKS

1 DETAIL 416A, RIGHT END OF BEAM
2 TOWER A LEVEL 864 DETAIL 719A FOR RIGHT SUPPORT

LICENSED PROFESSIONAL ENGINEER — LESLIE E. ROBERTSON — No. 34360 — UNIVERSITY OF THE STATE OF NEW YORK

PROJECT THE WORLD TRADE CENTER | TITLE BEAM SCHEDULE TOWERS A AND B | DATE 12/ 6/68

| BEAM NO. | SIZE | TYPE | FY | SHAPE | PLATE 1 WIDTH | PLATE 1 THICK | PLATE 2 WIDTH | PLATE 2 THICK | DIMENSIONS LENGTH | DIMENSIONS DIM. A | SUPPORTS LEFT | SUPPORTS RIGHT | STUDS NO. | STUDS SIZE | REMARKS |
|---|---|---|---|---|---|---|---|---|---|---|---|---|---|---|---|
| 6367 | - | 100 | 36 | 18WF45 | - | - | - | - | - | - | 391E | 220H | - | - | |
| 6368 | - | 100 | 36 | 12WF40 | - | - | - | - | - | - | 36.1K | 36.1K | - | - | |
| 6369 | - | 100 | 50 | 33WF118 | - | - | - | - | - | - | 108A | 109A | - | - | |
| 6370 | - | 100 | 50 | 12WF92 | - | - | - | - | - | - | 76.7K | 761B | - | - | |
| 6371 | - | 100 | 50 | 12WF79 | - | - | - | - | - | - | 47.1K | 760B | - | - | |
| 6372 | - | 100 | 36 | 12WF27 | - | - | - | - | - | - | 503A | 276B | - | - | X |
| [redacted] | - | 100 | 50 | 12WF27 | - | - | - | - | - | - | 276B | 350C | - | - | |
| [redacted] | - | 100 | 36 | 10WF21 | - | - | - | - | - | - | 101 | 760 | - | - | |
| [redacted] | - | 100 | 36 | 12WF27 | - | - | - | - | - | - | 26.5K | 738 | - | - | |
| 6376 | - | 700 | 36 | 12WF27 | 8-1/2 | 1/2 | - | - | SEE SUPT. DET. | | 736A | 739 | 36 | 3/4X3 | |
| 6377 | - | 700 | 36 | 12WF27 | 8-1/2 | 1/2 | - | - | SEE SUPT. DET. | | 736A | 739 | 36 | 3/4X3 | |
| 6378 | - | 100 | 36 | 12WF27 | - | - | - | - | - | - | 738 | 26.5K | - | - | |
| 6379 | - | 700 | 50 | 18WF45 | 9-1/2 | 1/2 | - | - | SEE SUPT. DET. | | 703A | 705C | 58 | 3/4X3 | |
| 6380 | - | 100 | 50 | 18WF45 | - | - | - | - | - | - | 703B | 703B | 58 | 3/4X3 | |
| 6381 | - | 100 | 36 | 18WF45 | - | - | - | - | - | - | 703B | 702A | 30 | 3/4X3 | |
| 6382 | - | 100 | 36 | 16WF36 | - | - | - | - | - | - | 711B | 705B | 48 | 3/4X3 | |
| 6383 | - | 700 | 36 | 16WF36 | 9 | 1/2 | - | - | SEE SUPT. DET. | | 705A | 705B | 48 | 3/4X3 | |
| 6384 | - | 100 | 36 | 16WF36 | - | - | - | - | - | - | 703C | 703C | 48 | 3/4X3 | |
| 6385 | - | 100 | 36 | 16WF36 | - | - | - | - | - | - | 703C | 702A | 30 | 3/4X3 | |
| 6386 | - | 700 | 50 | 16WF36 | 9 | 1/2 | - | - | SEE SUPT. DET. | | 723A | 739 | 48 | 3/4X3 | |
| 6387 | - | 100 | 50 | 16WF45 | - | - | - | - | - | - | 710A | 26.5K | 48 | 3/4X3 | |
| 6388 | - | 100 | 50 | 16WF45 | - | - | - | - | - | - | 710A | 26.5K | 48 | 3/4X3 | |
| [redacted] | - | 700 | 36 | 16WF40 | 9 | 1/2 | - | - | SEE SUPT. DET. | | 715 | 711B | 52 | 3/4X3 | |
| [redacted] | - | 100 | 36 | 16WF40 | - | - | - | - | - | - | 711B | 711C | 52 | 3/4X3 | |
| [redacted] | - | 100 | 36 | 16WF40 | - | - | - | - | - | - | 711C | 709B | 52 | 3/4X3 | |
| 6392 | - | 100 | 36 | 16WF36 | - | - | - | - | - | - | 719A | 703D | 20 | 3/4X3 | |
| 6393 | - | 100 | 36 | 16WF40 | - | - | - | - | - | - | 710A | 710A | 52 | 3/4X3 | |
| 6394 | - | 100 | 36 | 16WF36 | - | - | - | - | - | - | 710A | 709 | 52 | 3/4X3 | |
| 6395 | - | 100 | 36 | 16WF36 | - | - | - | - | - | - | 705B | 703C | 20 | 3/4X3 | |
| 6396 | - | 100 | 36 | 16WF36 | - | - | - | - | - | - | 710A | 710A | 25 | 3/4X3 | |
| 6397 | - | 100 | 36 | 16WF45 | - | - | - | - | - | - | 739 | 724A | 58 | 3/4X3 | |
| 6398 | - | 700 | 36 | 16WF40 | 9 | 1/2 | - | - | SEE SUPT. DET. | | 724A | 710A | - | - | |
| 6399 | - | 700 | 36 | 16WF40 | 9 | 1/2 | - | - | SEE SUPT. DET. | | 710A | 710A | 52 | 3/4X3 | |

UNIVERSITY OF THE STATE OF NEW YORK No. 34350

**SKILLING, HELLE, CHRISTIANSEN, ROBERTSON** — Structural & Civil Engineers

PROJECT: THE WORLD TRADE CENTER | TITLE: BEAM SCHEDULE TOWERS A AND B | DATE: 12/ 6/68

REVISIONS

| BEAM NO. | SIZE | TYPE | FY | PLATE 1 SHAPE | PLATE 1 WIDTH | PLATE 1 THICK | PLATE 2 WIDTH | PLATE 2 THICK | DIMENSIONS LENGTH | DIMENSIONS DIM. A | SUPPORTS LEFT | SUPPORTS RIGHT | STUDS NO. | STUDS SIZE | REMARKS |
|---|---|---|---|---|---|---|---|---|---|---|---|---|---|---|---|
| 6400 | - | 100 | 36 | 16WF3 | - | - | - | - | - | - | 710A | 709D | 52 | 3/4X3 | |
| 6401 | - | 700 | 50 | 16WF45 | 9 | 1/2 | - | - | SEE SUPT. | DET. | 739 | 710A | 48 | 3/4X3 | |
| 6402 | - | 700 | 50 | 16WF45 | 9 | 1/2 | - | - | SEE SUPT. | DET. | 739 | 710A | 48 | 3/4X3 | |
| 6403 | - | 700 | 36 | 18WF50 | 9-1/2 | 1/2 | - | - | SEE SUPT. | DET. | 717 | 718 | 58 | 3/4X3 | |
| 6404 | - | 700 | 50 | 16WF45 | 9- | 1/2 | - | - | SEE SUPT. | DET. | 718 | 711C | 52 | 3/34 | |
| 6405 | - | 700 | 50 | 16WF45 | 9 | 1/2 | - | - | SEE SUPT. | DET. | 711C | 709B | 52 | 3/4X3 | |
| 6406 | - | 100 | 36 | 24WF68 | - | - | - | - | - | - | 719 | 718 | - | - | 2 |
| 6407 | - | 700 | 36 | 16WF36 | 9 | 1/2 | - | - | SEE SUPT. | DET. | 26.5K | 711C | 40 | 3/4X3 | |
| 6408 | - | 700 | 50 | 18WF50 | 9-1/2 | 1/2 | - | - | SEE SUPT. | DET. | 709 | 709C | 64 | 3/4X3 | |
| 6409 | - | 700 | 36 | 16WF45 | 9 | 1/2 | - | - | SEE SUPT. | DET. | 709C | 709 | 30 | 3/4X3 | |
| 6410 | - | 700 | 50 | 18WF50 | 9-1/2 | 1/2 | - | - | SEE SUPT. | DET. | 709 | 709 | 64 | 3/4X3 | |
| 6411 | - | 100 | 36 | 8B15 | - | - | - | - | - | - | 17.4K | 771D | - | - | |
| 6412 | - | 100 | 36 | 8B15 | - | - | - | - | - | - | 17.4K | 771B | - | - | |
| 6413 | - | 100 | 36 | 8B 15 | - | - | - | - | - | - | 17.4K | 771B | - | - | |
| 6414 | - | 100 | 36 | 6CH10.5 | - | - | - | - | - | - | 8.8K | 363B | - | - | |
| 6415 | - | 100 | 36 | 10WF21 | - | - | - | - | - | - | 774B | 26.5K | - | - | |
| 6416 | - | 100 | 36 | 8B13 | - | - | - | - | - | - | 17.4K | 17.4K | - | - | |
| 6417 | - | 100 | 36 | 12WF27 | - | - | - | - | - | - | 26.5K | 771C | - | - | |
| 6418 | - | 100 | 36 | 12WF40 | - | - | - | - | - | - | 47.1K | 391C | - | - | |
| 6419 | - | 100 | 36 | 18WF45 | - | - | - | - | - | - | 472C | 472A | - | - | |
| 6420 | - | 100 | 36 | 18WF45 | - | - | - | - | - | - | 705C | 702B | 30 | 3/4X3 | |
| 6421 | - | 700 | 36 | 18WF45 | 9-1/2 | 1/2 | - | - | SEE SUPT. | DET. | 703A | 703A | 30 | 3/4X3 | |
| 6422 | - | 100 | 36 | 12WF50 | - | - | - | - | - | - | 353B | 353B | - | - | |
| 6423 | - | 100 | 36 | 12WF50 | - | - | - | - | - | - | 353B | 353B | - | - | |
| 6424 | - | 459 | 50 | 24WF62 | - | - | - | - | - | - | 283I | 399B | - | - | |
| 6425 | - | 100 | 36 | 12WF36 | - | - | - | - | - | - | 220A | 349B | - | - | |
| 6426 | - | 100 | 36 | 12WF36 | - | - | - | - | - | - | 364H | 349C | - | - | |
| 6427 | - | 100 | 36 | 12WF27 | - | - | - | - | - | - | 349C | 334A | - | - | |
| 6428 | - | 100 | 36 | 12WF85 | - | - | - | - | - | - | 364A | 364I | - | - | 1 |
| 6429 | - | 100 | 36 | 12WF65 | - | - | - | - | - | - | 364I | 364I | - | - | |
| 6430 | - | 100 | 36 | 12WF36 | - | - | - | - | - | - | 364I | 220L | - | - | |
| 6431 | - | 100 | 36 | 12WF40 | - | - | - | - | - | - | 26.5K | 26.5K | - | - | |
| 6432 | - | 100 | 36 | 12WF40 | - | - | - | - | - | - | 111P | 111P | - | - | |
| 6433 | - | 100 | 36 | 8B13 | - | - | - | - | - | - | 17.4K | 17.4K | - | - | |

REMARKS

1 DETAIL 3101, INTERMEDIATE SUPPORT
2 TOWER B LEVEL 264. DETAIL 719A FOR LEFT SUPPORT.

5-AB1-193

**SKILLING, HELLE, CHRISTIANSEN, ROBERTSON** — Structural & Civil Engineers

PROJECT: THE WORLD TRADE CENTER | TITLE: BEAM SCHEDULE TOWERS A AND B | DATE: 12/ 6/68

REVISIONS

| BEAM NO. | SIZE | TYPE | FY | PLATE 1 SHAPE | PLATE 1 WIDTH | PLATE 1 THICK | PLATE 2 WIDTH | PLATE 2 THICK | DIMENSIONS LENGTH | DIMENSIONS DIM. A | SUPPORTS LEFT | SUPPORTS RIGHT | STUDS NO. | STUDS SIZE | REMARKS |
|---|---|---|---|---|---|---|---|---|---|---|---|---|---|---|---|
| 6434 | - | 100 | 36 | 8B13 | - | - | - | - | - | - | 17.4K | 17.4K | - | - | |
| 6435 | - | 100 | 36 | 12WF79 | - | - | - | - | - | - | 111B | 111C | - | - | 2 |
| 6436 | - | 100 | 36 | 12WF79 | - | - | - | - | - | - | 111B | 111B | - | - | |
| 6437 | - | 100 | 36 | 12WF53 | - | - | - | - | - | - | 111C | 111C | - | - | |
| 6438 | - | 100 | 36 | 12WF36 | - | - | - | - | - | - | 310F | 26.5K | - | - | |
| 6439 | - | 100 | 36 | 12WF36 | - | - | - | - | - | - | 26.5K | 111A | - | - | X |
| 6440 | - | 100 | 36 | 12B19 | - | - | - | - | - | - | 26.5K | 26.5K | - | - | |
| 6441 | - | 100 | 36 | 12WF27 | - | - | - | - | - | - | 287B | 26.5K | - | - | |
| 6442 | - | 100 | 36 | 12B19 | - | - | - | - | - | - | 26.5K | 26.5K | - | - | |
| 6443 | - | 100 | 36 | 12WF72 | - | - | - | - | - | - | 111C | 111C | - | - | 2 |
| 6444 | - | 100 | 36 | 12WF72 | - | - | - | - | - | - | 111A | 111A | - | - | |
| 6445 | - | 100 | 36 | 12WF53 | - | - | - | - | - | - | 111C | 111C | - | - | |
| 6446 | - | 100 | 36 | 14B22 | - | - | - | - | - | - | 26.5K | 26.5K | 14 | 3/4X3 | |
| 6447 | - | 100 | 36 | 12B22 | - | - | - | - | - | - | 26.5K | 760E | - | - | |
| 6448 | - | 100 | 36 | 10WF21 | - | - | - | - | - | - | 26.5K | 760A | - | - | |
| 6449 | - | 100 | 36 | 12WF27 | - | - | - | | - | - | 283I | 283I | - | - | |
| 6450 | - | 100 | 36 | 18WF45 | - | - | - | - | - | - | 472I | 472K | - | - | |
| 6451 | - | 100 | 36 | 12WF27 | - | - | - | - | - | - | 26.5K | 26.5K | - | - | |
| 6452 | - | 100 | 36 | 18WF50 | - | - | - | | - | - | 472I | 472K | - | - | |
| 6453 | - | 100 | 36 | 16WF45 | - | - | - | - | - | - | 395D | 364J | - | - | |
| 6454 | - | 100 | 36 | 16WF45 | - | - | - | - | - | - | 364J | 364J | - | - | |
| 6455 | - | 100 | 36 | 16WF45 | - | - | - | - | - | - | 364J | 220L | - | - | |
| 6456 | - | 100 | 36 | 12SS5.0 | - | - | - | - | - | - | 283M | 26.5K | - | - | |
| 6457 | - | 100 | 50 | 36WF135 | - | - | - | - | - | - | 400A | 400A | - | - | |
| 6458 | - | 100 | 36 | 12WF31 | - | - | - | - | - | - | 400A | 326A | - | - | |
| 6459 | - | 100 | 36 | 12WF79 | - | - | - | - | - | - | 364B | 310I | - | - | |
| 6460 | - | 100 | 36 | 12WF72 | - | - | - | - | - | - | 205E | 364I | - | - | 1 |
| 6461 | - | 100 | 36 | 12WF36 | - | - | - | - | - | - | 364I | 220L | - | - | |
| 6462 | - | 100 | 36 | 12WF27 | - | - | - | - | - | - | 283A | 26.5K | - | - | |
| 6463 | - | 100 | 36 | 16WF45 | - | - | - | - | - | - | 307B | 272B | - | - | |
| 6464 | - | 100 | 36 | 18WF45 | - | - | - | - | - | - | 272B | 364F | - | - | |
| 6465 | - | 100 | 36 | 16WF45 | - | - | - | - | - | - | 364F | 220L | - | - | |
| 6466 | - | 100 | 36 | 18WF60 | - | - | - | - | - | - | 283A | 283Z | - | - | |

REMARKS

1 DET. 445A LEFT END OF BEAM.
2 DET. 111C RIGHT END OF BEAM, MODIFIED SEE 6-85

LICENSED PROFESSIONAL ENGINEER — LESLIE E. ROBERTSON — No. 34360 — STATE OF NEW YORK

5-AB1-194

**SKILLING, HELLE, CHRISTIANSEN, ROBERTSON** — Structural & Civil Engineers

PROJECT: THE WORLD TRADE CENTER | TITLE: BEAM SCHEDULE TOWERS A AND B | DATE: 12/ 6/68

REVISIONS

| BEAM NO. | SIZE | TYPE | FY | PLATE 1 SHAPE | PLATE 1 WIDTH | PLATE 1 THICK | PLATE 2 WIDTH | PLATE 2 THICK | DIMENSIONS LENGTH | DIMENSIONS DIM. A | SUPPORTS LEFT | SUPPORTS RIGHT | STUDS NO. | STUDS SIZE | REMARKS |
|---|---|---|---|---|---|---|---|---|---|---|---|---|---|---|---|
| 6467 | - | 100 | 36 | 18WF50 | - | - | - | - | - | - | 472A | 472A | - | - | |
| 6468 | - | 100 | 36 | 12WF27 | - | - | - | - | - | - | 26.5K | 26.5K | - | - | |
| 6469 | - | 100 | 36 | 18WF45 | - | - | - | - | - | - | 283A | 334E | - | - | |
| 6470 | - | 100 | 36 | 12WF50 | - | - | - | - | - | - | 391A | 47.1K | - | - | |
| 6471 | - | 100 | 36 | 12WF27 | - | - | - | - | - | - | 26.5K | 26.5K | - | - | |
| 6472 | - | 100 | 36 | 12WF85 | - | - | - | - | - | - | 220Y | 391D | - | - | |
| 6473 | - | 100 | 36 | 12WF85 | - | - | - | - | - | - | 391D | 220Y | - | - | X |
| 6474 | - | 100 | 36 | 12WF79 | - | - | - | - | - | - | 761 | 26.5K | - | - | |
| 6475 | - | 100 | 36 | 12X16.5 | - | - | - | - | - | - | 26.5K | 26.5K | - | - | |
| 6476 | - | 100 | 36 | 16WF45 | - | - | - | - | - | - | 220L | 205D | - | - | |
| 6477 | - | 100 | 36 | 16WF40 | - | - | - | - | - | - | 401B | 401B | - | - | |
| 6478 | - | 100 | 36 | 16WF45 | - | - | - | - | - | - | 205D | 220H | - | - | |
| 6479 | - | 100 | 36 | 12WF31 | - | - | - | - | - | - | 283M | 283M | - | - | |
| 6480 | - | 100 | 36 | 12150.0 | - | - | - | - | - | - | 111Q | 172A | - | - | 3 |
| 6481 | - | 100 | 36 | 18WF45 | - | - | - | - | - | - | 283A | 472C | - | - | |
| 6482 | - | 100 | 36 | 18WF50 | - | - | - | - | - | - | 472A | 472H | - | - | |
| 6483 | - | 100 | 50 | 12WF50 | - | - | - | - | - | - | 54.1K | 54.1K | - | - | |
| 6484 | - | 100 | 36 | 18WF45 | - | - | - | - | - | - | 472C | 472H | - | - | |
| 6485 | - | 100 | 36 | 12WF50 | - | - | - | - | - | - | 26.5K | 26.5K | - | - | |
| 6486 | - | 100 | 36 | 12WF45 | - | - | - | - | - | - | 26.5K | 26.5K | - | - | |
| 6487 | - | 100 | 36 | 12WF120 | - | - | - | - | - | - | 90.2K | 391B | - | - | |
| 6488 | - | 100 | 36 | 12WF120 | - | - | - | - | - | - | 391B | 238 | - | - | |
| 6489 | - | 100 | 36 | 24X76.9 | - | - | - | - | - | - | 220 | 205 | - | - | |
| 6490 | - | 100 | 36 | 24X76.9 | - | - | - | - | - | - | 35.3K | 35.3K | - | - | |
| 6491 | - | 100 | 36 | 24X76.9 | - | - | - | - | - | - | 205B | 220F | - | - | |
| 6492 | - | 100 | 36 | 16B31 | - | - | - | - | - | - | 26.5K | 26.5K | - | - | |
| 6493 | - | 100 | 36 | 16B31 | - | - | - | - | - | - | 254C | 364L | - | - | 2 |
| 6494 | - | 100 | 36 | 16B31 | - | - | - | - | - | - | 364L | 220E | - | - | |
| 6495 | - | 100 | 36 | 12WF85 | - | - | - | - | - | - | 220X | 364K | - | - | 1 |
| 6496 | - | 100 | 36 | 12WF72 | - | - | - | - | - | - | 364K | 364K | - | - | |
| 6497 | - | 100 | 36 | 12WF36 | - | - | - | - | - | - | 364K | 220H | - | - | |
| 6498 | - | 100 | 36 | 6B16 | - | - | - | - | - | - | 276B | 13.3K | - | - | |
| 6499 | - | 100 | 36 | 12WF31 | - | - | - | - | - | - | 370M | 350C | - | - | |

REMARKS

1 DETAIL 205B, INTERMEDIATE SUPPORT
2 DETAIL 205Z, INTERMEDIATE SUPPORT
3 CUT AND CHIP LEFT END OF BEAM TO FIT DET. 111

LICENSED PROFESSIONAL ENGINEER ☆ LESLIE E. ROBERTSON ☆ NEW YORK ☆ No. 34360 ☆ UNIVERSITY OF

5-AB1-195

**SKILLING, HELLE, CHRISTIANSEN, ROBERTSON** — Structural & Civil Engineers

PROJECT: THE WORLD TRADE CENTER | TITLE: BEAM SCHEDULE TOWERS A AND B | DATE: 12/ 6/68

REVISIONS

| BEAM NO. | SIZE | TYPE | FY | PLATE 1 SHAPE | PLATE 1 WIDTH | PLATE 1 THICK | PLATE 2 WIDTH | PLATE 2 THICK | DIMENSIONS LENGTH | DIMENSIONS DIM. A | SUPPORTS LEFT | SUPPORTS RIGHT | STUDS NO. | STUDS SIZE | REMARKS |
|---|---|---|---|---|---|---|---|---|---|---|---|---|---|---|---|
| 6500 | - | 100 | 50 | 18WF50 | - | - | - | - | - | - | 709 | 709B | 58 | 3/4X3 | |
| 6501 | - | 100 | 36 | 12WF31 | - | - | - | - | - | - | 325A | 400A | - | - | |
| 6502 | - | 100 | 36 | 12WF65 | - | - | - | - | - | - | 338H | 364G | - | - | |
| 6503 | - | 100 | 36 | 12WF65 | - | - | - | - | - | - | 364G | 364G | - | - | |
| 6504 | - | 100 | 36 | 12WF65 | - | - | - | - | - | - | 364G | 399B | - | - | |
| 6505 | - | 100 | 36 | 12WF36 | - | - | - | - | - | - | 26.5K | 111A | - | - | X |
| 6506 | - | 100 | 36 | 12WF45 | - | - | - | - | - | - | 53.0K | 53.0K | - | - | |
| 6507 | - | 100 | 36 | 12B19 | - | - | - | - | - | - | 111U | 111U | - | - | |
| 6508 | - | 100 | 36 | 8B13 | - | - | - | - | - | - | 17.4K | 17.4K | - | - | |
| 6509 | - | 100 | 36 | 14B22 | - | - | - | - | - | - | 509E | 26.5K | - | - | |
| 6510 | - | 100 | 50 | 12WF79 | - | - | - | - | - | - | 110A | 760B | - | - | |
| 6511 | - | 100 | 50 | 12WF72 | - | - | - | - | - | - | 101B | 101B | - | - | |
| 6512 | - | 100 | 50 | 12WF79 | - | - | - | - | - | - | 101B | 760B | - | - | |
| 6513 | - | 100 | 50 | 12WF92 | - | - | - | - | - | - | 101B | 101B | - | - | |
| 6514 | - | 100 | 36 | 16WF45 | - | - | - | - | - | - | 205D | 220L | - | - | |
| 6515 | - | 100 | 36 | 12WF85 | - | - | - | - | - | - | 220H | 364M | - | - | |
| 6516 | - | 100 | 36 | 12WF85 | - | - | - | - | - | - | 364M | 220Y | - | - | |
| 6517 | - | 700 | 36 | 14WF30 | 9 | 1/2 | - | - | SEE SUPT. | DET. | 739 | 702B | 25 | 3/4X3 | |
| 6518 | - | 100 | 36 | 12WF31 | - | - | - | - | - | - | 220M | 435A | - | - | |
| 6519 | - | 100 | 36 | 16WF45 | - | - | - | - | - | - | 709B | 702A | 45 | 3/4X3 | |
| 6520 | - | 100 | 50 | 12WF58 | - | - | - | - | - | - | 54.1K | 760B | - | - | |
| 6521 | - | 100 | 36 | 12WF58 | - | - | - | - | - | - | 111C | 111A | - | - | |
| 6522 | - | 100 | 36 | 12WF58 | - | - | - | - | - | - | 111A | 111C | - | - | |
| 6523 | - | 100 | 36 | 12WF27 | - | - | - | - | - | - | 364H | 33MA | - | - | |
| 6524 | - | 100 | 36 | 12WF45 | - | - | - | - | - | - | 54.1K | 54.1K | - | - | |
| 6525 | - | 100 | 50 | 12WF92 | - | - | - | - | - | - | 70.7K | 760D | - | - | |
| 6526 | - | 100 | 36 | 8B13 | - | - | - | - | - | - | 101A | 17.4K | - | - | |
| 6527 | - | 100 | 50 | 12WF85 | - | - | - | - | - | - | 54.1K | 54.1K | - | - | |
| 6528 | - | 100 | 50 | 12WF53 | - | - | - | - | - | - | 101B | 761B | - | - | |
| 6529 | - | 100 | 50 | 12WF53 | - | - | - | - | - | - | 101B | 761B | - | - | |
| 6530 | - | 100 | 50 | 12WF58 | - | - | - | - | - | - | 54.1K | 760D | - | - | |
| 6531 | - | 100 | 50 | 12WF53 | - | - | - | - | - | - | 54.1K | 54.1K | - | - | |
| 6532 | - | 463 | 50 | 12WF72 | - | - | - | - | - | - | 101B | 760B | - | - | |
| 6533 | - | 100 | 50 | 12WF72 | - | - | - | - | - | - | 54.1K | 760B | - | - | |

LICENSED PROFESSIONAL ENGINEER LESLIE E. ROBERTSON No. 34360 UNIVERSITY OF YORK

**SKILLING, HELLE, CHRISTIANSEN, ROBERTSON** — Structural & Civil Engineers

PROJECT: THE WORLD TRADE CENTER | TITLE: BEAM SCHEDULE TOWERS A AND B | DATE: 12/ 6/68

REVISIONS

| BEAM NO. | SIZE | TYPE | FY | SHAPE | PLATE 1 WIDTH | PLATE 1 THICK | PLATE 2 WIDTH | PLATE 2 THICK | DIMENSIONS LENGTH | DIMENSIONS DIM. A | SUPPORTS LEFT | SUPPORTS RIGHT | STUDS NO. | STUDS SIZE | REMARKS |
|---|---|---|---|---|---|---|---|---|---|---|---|---|---|---|---|
| 6534 | - | 100 | 50 | 12WF58 | - | - | - | | - | - | 101B | 751C | - | - | |
| 6535 | - | 100 | 50 | 12WF79 | - | - | - | | - | - | 47.1K | 760D | - | - | |
| 6536 | - | 100 | 50 | 12WF53 | - | - | - | - | - | - | 104A | 760B | - | - | |
| 6537 | - | 100 | 50 | 12WF53 | - | - | - | | - | - | 54.1K | 760B | - | - | |
| 6538 | - | 100 | 50 | 12WF58 | - | - | - | | - | - | 54.1K | 54.1K | - | - | |
| 6539 | - | 100 | 50 | 12WF58 | - | - | - | | - | - | 54.1K | 101B | - | - | X |
| 6540 | - | 100 | 50 | 12WF50 | - | - | - | | - | - | 54.1K | 54.1K | - | - | |
| 6541 | - | 100 | 50 | 12WF50 | - | - | - | | - | - | 54.1K | 101B | - | - | |
| 6542 | - | 100 | 50 | 12WF58 | - | - | - | | - | - | 54.1K | 54.1K | - | - | |
| 6543 | - | 100 | 50 | 12WF58 | - | - | - | | - | - | 54.1K | 101B | - | - | |
| 6544 | - | 100 | 50 | 12WF79 | - | - | - | | - | - | 54.1K | 101B | - | - | |
| 6545 | - | 100 | 50 | 12WF92 | - | - | - | | - | - | 66.3K | 66.3K | - | - | |
| 6546 | - | 100 | 50 | 12WF79 | - | - | - | | - | - | 102B | 102B | - | - | |
| 6547 | - | 462 | 50 | 12WF92 | - | - | - | | - | - | 54.1K | 102B | - | - | |
| 6548 | - | 100 | 50 | 12WF92 | - | - | - | | - | - | 102B | 102B | - | - | |
| 6549 | - | 100 | 50 | 12WF190 | - | - | - | | - | - | 102B | 102B | - | - | |
| 6550 | - | 100 | 50 | 12WF92 | - | - | - | | - | - | 102B | 54.1K | - | - | |
| 6551 | - | 100 | 36 | 12WF27 | - | - | - | - | - | - | 26.5K | 26.5K | - | - | |
| 6552 | 16X5-1/2BX | 204 | 36 | - | 4 | 3/8 | 16 | 3/4 | - | - | 206A | 450 | - | - | |
| 6553 | - | 100 | 36 | 12WF79 | - | - | - | - | - | - | 205B | 220X | - | - | |
| 6554 | - | 100 | 36 | 12WF79 | - | - | - | - | - | - | 287F | 287B | - | - | |
| 6555 | - | 100 | 36 | 16WF36 | - | - | - | - | - | - | 711C | 26.5K | 40 | 3/4X3 | |
| 6556 | - | 100 | 36 | 16WF45 | - | - | - | - | - | - | 702B | 709B | 45 | 3/4X3 | |
| 6557 | - | 100 | 50 | 18WF50 | - | - | - | - | - | - | 709B | 709D | 58 | 3/4X3 | |
| 6558 | - | 100 | 36 | 21WF55 | - | - | - | - | - | - | 283C | 283C | - | - | |
| 6559 | - | 100 | 50 | 12WF79 | - | - | - | | - | - | 54.1K | 102B | - | - | |
| 6560 | - | 100 | 50 | 12WF45 | - | - | - | | - | - | 101B | 101B | - | - | |
| 6561 | - | 100 | 50 | 12WF79 | - | - | - | | - | - | 756B | 101B | - | - | |
| 6562 | - | 100 | 50 | 12WF65 | - | - | - | | - | - | 101B | 53.0K | - | - | |
| 6563 | - | 100 | 36 | 10WF21 | - | - | - | - | - | - | | 17.4K | - | - | |
| 6564 | - | 100 | 36 | 10WF21 | - | - | - | | - | - | 774E | 26.5K | - | - | |
| 6565 | - | 100 | 36 | 10WF21 | - | - | - | - | - | - | 751 | 17.4K | - | - | |
| 6566 | - | 100 | 36 | 10WF21 | - | - | - | - | - | - | 756 | 17.4K | - | - | |

LICENSED PROFESSIONAL ENGINEER ☆ LESLIE E. ROBERTSON ☆ No. 34360 ☆ UNIVERSITY OF THE STATE OF NEW YORK

5-AB1-197

**SKILLING, HELLE, CHRISTIANSEN, ROBERTSON** — Structural & Civil Engineers

PROJECT: THE WORLD TRADE CENTER | TITLE: BEAM SCHEDULE TOWERS A AND B | DATE: 12/ 6/68

REVISIONS

| BEAM NO. | SIZE | TYPE | FY | PLATE 1 SHAPE | PLATE 1 WIDTH | PLATE 1 THICK | PLATE 2 WIDTH | PLATE 2 THICK | DIMENSIONS LENGTH | DIMENSIONS DIM. A | SUPPORTS LEFT | SUPPORTS RIGHT | STUDS NO. | STUDS SIZE | REMARKS |
|---|---|---|---|---|---|---|---|---|---|---|---|---|---|---|---|
| 6567 | - | 100 | 36 | 10WF21 | - | - | - | - | - | - | 756 | 102 | - | - | |
| 6568 | - | 100 | 50 | 12WF79 | - | - | - | - | - | - | 774A | 54.1K | - | | |
| 6569 | - | 100 | 50 | 12WF79 | - | - | - | - | - | - | 757B | 54.1K | - | - | |
| 6570 | - | 100 | 36 | 10WF21 | - | - | - | - | - | - | 761 | 17.4K | - | - | |
| 6571 | - | 100 | 50 | 30WF108 | - | - | - | - | - | - | 312A | 108.0K | - | - | |
| 6572 | - | 100 | 36 | 10WF21 | - | - | - | - | - | - | 757 | 17.4K | - | - | X |
| 6573 | - | 100 | 50 | 30WF108 | - | - | - | - | - | - | 283L | 108.0K | - | - | |
| 6574 | 16X5-1/28X | 201 | 36 | - | 4 | 3/8 | 16 | 3/4 | - | - | 265C | 206B | - | - | |
| 6575 | - | 100 | 50 | 30WF108 | - | - | - | - | - | - | 108.0K | 283L | - | - | |
| 6576 | - | 100 | 50 | 30WF108 | - | - | - | - | - | - | 108.0K | 312A | - | - | |
| 6577 | - | 100 | 36 | 8B13 | - | - | - | - | - | - | 17.4K | 17.4K | - | - | |
| 6578 | - | 100 | 36 | 8B13 | - | - | - | - | - | - | 17.4K | 17.4K | - | - | |
| 6579 | - | 100 | 36 | 12131.8 | - | - | - | - | - | - | 26.5K | 773A | - | - | |
| 6580 | - | 100 | 36 | 10WF21 | - | - | - | - | - | - | 17.4K | 757 | - | - | |
| 6581 | - | 100 | 36 | 10WF21 | - | - | - | - | - | - | 102 | 756 | - | - | |
| 6582 | - | 100 | 50 | 12WF79 | - | - | - | - | - | - | 54.1K | 757B | - | - | |
| 6583 | - | 100 | 50 | 12WF79 | - | - | - | - | - | - | 54.1K | 774A | - | - | |
| 6584 | - | 100 | 36 | 12WF31 | - | - | - | - | - | - | 325A | 400A | - | - | |
| 6585 | - | 100 | 50 | 12WF120 | - | - | - | - | - | - | 102B | 172A | - | - | |
| 6586 | - | 100 | 50 | 12WF120 | - | - | - | - | - | - | 172A | 102B | - | - | |
| 6587 | - | 100 | 36 | 8B 15 | - | - | - | - | - | - | 17.4K | 758B | - | - | |
| 6588 | - | 100 | 36 | 10WF21 | - | - | - | - | - | - | 758A | 26.5K | - | - | |
| 6589 | - | 100 | 50 | 24WF68 | - | - | - | - | - | - | 775C | 775C | - | - | |
| 6590 | - | 100 | 36 | 10WF21 | - | - | - | - | - | - | 756A | 26.5K | - | - | |
| 6591 | - | 100 | 36 | 10WF21 | - | - | - | - | - | - | 756A | 101B | - | - | |
| 6592 | - | 100 | 36 | 10WF21 | - | - | - | - | - | - | 756A | 26.5K | - | - | |
| 6593 | - | 100 | 36 | 10WF21 | - | - | - | - | - | - | 760E | 101B | - | - | |
| 6594 | - | 100 | 36 | 10WF21 | - | - | - | - | - | - | 756A | 26.5K | - | - | |
| 6595 | - | 100 | 36 | 10WF21 | - | - | - | - | - | - | 756A | 26.5K | - | - | |
| 6596 | - | 100 | 36 | 10WF21 | - | - | - | - | - | - | 756A | 101B | - | - | |
| 6597 | - | 100 | 36 | 8B13 | - | - | - | - | - | - | 102 | 17.4K | - | - | |
| 6598 | - | 100 | 50 | 12WF79 | - | - | - | - | - | - | 172A | 774A | - | - | |
| 6599 | - | 100 | 36 | 12WF36 | - | - | - | - | - | - | 102B | 102B | - | - | |

LICENSED PROFESSIONAL ENGINEER ☆ LESLIE E. ROBERTSON ☆ No. 34360 ☆ UNIVERSITY OF THE STATE OF NEW YORK

5-A81-198

**SKILLING-HELLE-CHRISTIANSEN-ROBERTSON** — Civil & Structural Engineers

PROJECT: THE WORLD TRADE CENTER | TITLE: BEAM SCHEDULE TOWERS A AND B | DATE: 2/ 9/68

REVISIONS

| BEAM NO. | SIZE | TYPE | FY | SHAPE | PLATE 1 WIDTH | PLATE 1 THICK | PLATE 2 WIDTH | PLATE 2 THICK | DIMENSIONS LENGTH | DIMENSIONS DIM. A | SUPPORTS LEFT | SUPPORTS RIGHT | STUDS NO. | STUDS SIZE | REMARKS |
|---|---|---|---|---|---|---|---|---|---|---|---|---|---|---|---|
| 6600 | - | 100 | 36 | 12B19 | - | - | - | - | - | - | 26.5K | 26.5K | - | - | |
| 6601 | - | 100 | 36 | 12WF31 | - | - | - | - | - | - | 26.5K | 773B | - | - | |
| 6602 | - | 100 | 36 | 12WF31 | - | - | - | - | - | - | 26.5K | 775 | - | - | |
| 6604 | - | 100 | 36 | 12WF45 | - | - | - | - | - | - | 101B | 39.0K | - | - | |
| 6605 | - | 100 | 50 | 12WF92 | - | - | - | - | - | - | 107A | 107A | - | - | X |
| 6606 | - | 100 | 50 | 12WF53 | - | - | - | - | - | - | 39.0K | 39.0K | - | - | |
| 6607 | - | 100 | 36 | 12B19 | - | - | - | - | - | - | 26.5K | 781 | - | - | |
| 6608 | - | 100 | 50 | 12WF53 | - | - | - | - | - | - | 101B | 101B | - | - | |
| 6609 | - | 100 | 50 | 12WF58 | - | - | - | - | - | - | 101B | 101B | - | - | |
| 6610 | - | 100 | 50 | 12WF53 | - | - | - | - | - | - | 101B | 54.1K | - | - | |
| 6611 | - | 100 | 50 | 12WF45 | - | - | - | - | - | - | 53.0K | 53.0K | - | - | |
| 6612 | - | 100 | 36 | 12WF36 | - | - | - | - | - | - | 102B | 756B | - | - | |
| 6613 | - | 100 | 36 | 8B 15 | - | - | - | - | - | - | 771B | 17.4K | - | - | |
| 6614 | - | 100 | 50 | 12WF79 | - | - | - | - | - | - | 110A | 774A | - | - | |
| 6615 | - | 100 | 36 | 12WF58 | - | - | - | - | - | - | 26.5K | 756 | - | - | |
| 6616 | - | 100 | 50 | 12WF58 | - | - | - | - | - | - | 3101 | 54.1K | - | - | |
| 6617 | - | 100 | 50 | 12WF58 | - | - | - | - | - | - | 101B | 757B | - | - | |
| 6618 | - | 100 | 50 | 24WF68 | - | - | - | - | - | - | 775B | 775B | - | - | |
| 6619 | - | 100 | 50 | 12WF161 | - | - | - | - | - | - | 101B | 757B | - | - | |
| 6620 | - | 100 | 50 | 12WF53 | - | - | - | - | - | - | 53.0K | 756B | - | - | |
| 6621 | - | 100 | 50 | 12WF53 | - | - | - | - | - | - | 101B | 756B | - | - | |
| 6622 | - | 100 | 50 | 12WF53 | - | - | - | - | - | - | 101B | 757B | - | - | |
| 6623 | - | 100 | 36 | 12WF79 | - | - | - | - | - | - | 101 | 756 | - | - | |
| 6624 | - | 100 | 50 | 12WF58 | - | - | - | - | - | - | 101B | 101B | - | - | |
| 6625 | - | 100 | 50 | 12WF58 | - | - | - | - | - | - | 54.1K | 54.1K | - | - | |
| 6626 | - | 100 | 50 | 12WF58 | - | - | - | - | - | - | 54.1K | 101B | - | - | |
| 6627 | - | 100 | 50 | 12WF50 | - | - | - | - | - | - | 54.1K | 54.1K | - | - | |
| 6628 | - | 100 | 50 | 12WF50 | - | - | - | - | - | - | 54.1K | 101B | - | - | |
| 6629 | - | 100 | 50 | 12WF72 | - | - | - | - | - | - | 54.1K | 54.1K | - | - | |
| 6630 | - | 100 | 50 | 12WF58 | - | - | - | - | - | - | 54.1K | 101B | - | - | |
| 6631 | - | 100 | 50 | 12WF58 | - | - | - | - | - | - | 54.1K | 54.1K | - | - | |
| 6632 | - | 100 | 50 | 12WF98 | - | - | - | - | - | - | 54.1K | 101B | - | - | |
| 6633 | - | 100 | 50 | 12WF72 | - | - | - | - | - | - | 54.1K | 101B | - | - | |

LICENSED PROFESSIONAL ENGINEER LESLIE E. ROBERTSON No. 34360 LICENSED OF THE STATE OF NEW YORK

5-AB1-199

**SKILLING, HELLE, CHRISTIANSEN, ROBERTSON** — **Structural & Civil Engineers**

PROJECT: THE WORLD TRADE CENTER | TITLE: BEAM SCHEDULE TOWERS A AND B | DATE: 12/ 6/68

REVISIONS

| BEAM NO. | SIZE | TYPE | FY | PLATE 1 SHAPE | PLATE 1 WIDTH | PLATE 1 THICK | PLATE 2 WIDTH | PLATE 2 THICK | DIMENSIONS LENGTH | DIMENSIONS DIM. A | SUPPORTS LEFT | SUPPORTS RIGHT | STUDS NO. | STUDS SIZE | REMARKS |
|---|---|---|---|---|---|---|---|---|---|---|---|---|---|---|---|
| 6634 | - | 100 | 50 | 12WF72 | - | - | - | - | - | - | 54.1K | 54.1K | - | - | |
| 6635 | - | 100 | 50 | 12WF79 | - | - | - | - | - | - | 102B | 102B | - | - | |
| 6636 | - | 100 | 50 | 12WF92 | - | - | - | - | - | - | 54.1K | 102B | - | - | |
| 6637 | - | 100 | 50 | 12WF190 | - | - | - | - | - | - | 102B | 102B | - | - | |
| 6638 | - | 100 | 36 | 10WF21 | - | - | - | - | - | - | 102B | 102B | - | - | |
| 6639 | - | 100 | 50 | 12WF79 | - | - | - | - | - | - | 102B | 54.1K | - | - | |
| 6640 | - | 100 | 50 | 12WF72 | - | - | - | - | - | - | 111A | 111A | - | - | |
| 6641 | - | 100 | 50 | 12WF72 | - | - | - | - | - | - | 111A | 111C | - | - | |
| 6642 | - | 100 | 36 | 12WF27 | - | - | - | - | - | - | 26.5K | 395D | - | - | |
| 6643 | - | 100 | 36 | 12WF45 | - | - | - | - | - | - | 364 | 364 | - | - | |
| 6644 | - | 100 | 36 | 8B15 | - | - | - | - | - | - | 17.4K | 778A | - | - | |
| 6645 | - | 100 | 36 | 8B15 | - | - | - | - | - | - | 778A | 17.4K | - | - | |
| 6646 | - | 100 | 36 | 12WF27 | - | - | - | - | - | - | 751F | 26.5K | - | - | |
| 6647 | - | 100 | 36 | 10WF21 | - | - | - | - | - | - | 752 | 17.4K | - | - | |
| 6648 | - | 100 | 36 | 10WF21 | - | - | - | - | - | - | 752A | 102B | - | - | |
| 6649 | - | 100 | 36 | 10WF21 | - | - | - | - | - | - | 751 | 102 | - | - | |
| 6650 | - | 100 | 36 | 10WF21 | - | - | - | - | - | - | 752A | 26.5K | - | - | |
| 6651 | - | 100 | 36 | 8B15 | - | - | - | - | - | - | 778A | 17.4K | - | - | |
| 6652 | - | 100 | 36 | 8B13 | - | - | - | - | - | - | 17.4K | 17.4K | - | - | |
| 6653 | - | 100 | 36 | 12WF45 | - | - | - | - | - | - | 751B | 101B | - | - | |
| 6654 | - | 100 | 36 | 8B15 | - | - | - | - | - | - | 17.4K | 778A | - | - | |
| 6655 | - | 100 | 36 | 10WF21 | - | - | - | - | - | - | 17.4K | 17.4K | - | - | |
| 6656 | - | 100 | 36 | 8B13 | - | - | - | - | - | - | 17.4K | 17.4K | - | - | |
| 6657 | - | 100 | 36 | 10B15 | - | - | - | - | - | - | 17.4K | 779A | - | - | |
| 6658 | - | 100 | 36 | 8B13 | - | - | - | - | - | - | 17.4K | 17.4K | - | - | |
| 6659 | - | 100 | 36 | 8B13 | - | - | - | - | - | - | 17.4K | 111W | - | - | |
| 6660 | - | 100 | 36 | 10WF21 | - | - | - | - | - | - | 102B | 752A | - | - | |
| 6661 | - | 100 | 36 | 12WF72 | - | - | - | - | - | - | 101 | 101 | - | - | |
| 6662 | - | 100 | 36 | 12WF79 | - | - | - | - | - | - | 101 | 751 | - | - | |
| 6663 | - | 100 | 50 | 12WF79 | - | - | - | - | - | - | 101B | 101B | - | - | |
| 6664 | - | 100 | 50 | 12WF85 | - | - | - | - | - | - | 101B | 750B | - | - | |
| 6665 | - | 100 | 36 | 8B15 | - | - | - | - | - | - | 17.4K | 753D | - | - | |
| 6666 | - | 100 | 36 | 8B15 | - | - | - | - | - | - | 753D | 17.4K | - | - | |

LICENSED PROFESSIONAL ENGINEER ★ LESLIE E. ROBERTSON ★ No. 34360 ★ UNIVERSITY OF THE STATE OF NEW YORK



S-601-204

**SKILLING, HELLE, CHRISTIANSEN, ROBERTSON** — Structural & Civil Engineers

PROJECT: THE WORLD TRADE CENTER | TITLE: BEAM SCHEDULE TOWERS A AND B | DATE: 12/ 6/68

REVISIONS

| BEAM NO. | SIZE | TYPE | FY | SHAPE | PLATE 1 WIDTH | PLATE 1 THICK | PLATE 2 WIDTH | PLATE 2 THICK | DIMENSIONS LENGTH | DIMENSIONS DIM. A | SUPPORTS LEFT | SUPPORTS RIGHT | STUDS NO. | STUDS SIZE | REMARKS |
|---|---|---|---|---|---|---|---|---|---|---|---|---|---|---|---|
| 6667 | - | 100 | 50 | 12WF72 | - | - | - | - | - | - | 54.1K | 752B | - | - | |
| 6668 | - | 100 | 50 | 12WF72 | - | - | - | - | - | - | 101B | 751B | - | - | |
| 6669 | - | 100 | 50 | 12WF72 | - | - | - | - | - | - | 54.1K | 752B | - | - | |
| 6670 | - | 100 | 50 | 12WF65 | - | - | - | - | - | - | 53.0K | 752B | - | - | |
| 6671 | - | 100 | 50 | 12WF65 | - | - | - | - | - | - | 101B | 751B | - | - | |
| 6672 | - | 100 | 50 | 12WF65 | - | - | - | - | - | - | 53.0K | 752B | - | - | X |
| 6673 | - | 100 | 50 | 12WF65 | - | - | - | - | - | - | 53.0K | 53.0K | - | - | |
| 6674 | - | 100 | 50 | 12WF65 | - | - | - | - | - | - | 101B | 752B | - | - | |
| 6675 | - | 100 | 36 | 12WF58 | - | - | - | - | - | - | 26.5K | 26.5K | - | - | |
| 6676 | - | 100 | 36 | 12WF58 | - | - | - | - | - | - | 26.5K | 101 | - | - | |
| 6677 | - | 100 | 36 | 12WF50 | - | - | - | - | - | - | 26.5K | 26.5K | - | - | |
| 6678 | - | 100 | 50 | 12WF58 | - | - | - | - | - | - | 310I | 54.1K | - | - | |
| 6679 | - | 100 | 50 | 12WF72 | - | - | - | - | - | - | 54.1K | 54.1K | - | - | |
| 6680 | - | 100 | 50 | 12WF65 | - | - | - | - | - | - | 54.1K | 101B | - | - | |
| 6681 | - | 100 | 50 | 12WF72 | - | - | - | - | - | - | 54.1K | 54.1K | - | - | |
| 6682 | - | 100 | 50 | 12WF72 | - | - | - | - | - | - | 54.1K | 101B | - | - | |
| 6683 | - | 100 | 50 | 12WF79 | - | - | - | - | - | - | 54.1K | 101B | - | - | |
| 6684 | - | 100 | 50 | 12WF79 | - | - | - | - | - | - | 54.1K | 54.1K | - | - | |
| 6685 | - | 100 | 50 | 12WF106 | - | - | - | - | - | - | 102B | 102B | - | - | |
| 6686 | - | 100 | 36 | 12WF72 | - | - | - | - | - | - | 338C | 329A | - | - | |
| 6687 | - | 100 | 36 | 12WF65 | - | - | - | - | - | - | 26.5K | 26.5K | - | - | |
| 6688 | - | 100 | 36 | 12WF72 | - | - | - | - | - | - | 329A | 364B | - | - | |
| 6689 | - | 100 | 36 | 12WF36 | - | - | - | - | - | - | 364A | 364A | - | - | |
| 6690 | - | 100 | 50 | 12WF120 | - | - | - | - | - | - | 111B | 102B | - | - | |
| 6691 | - | 100 | 50 | 12WF92 | - | - | - | - | - | - | 47.1K | 751E | - | - | |
| 6692 | - | 100 | 36 | 12WF79 | - | - | - | - | - | - | 26.5K | 752 | - | - | |
| 6693 | - | 100 | 50 | 12WF92 | - | - | - | - | - | - | 47.1K | 47.1K | - | - | |
| 6694 | - | 100 | 36 | 12B22 | - | - | - | - | - | - | 26.5K | 752 | - | - | |
| 6695 | - | 100 | 50 | 12WF92 | - | - | - | - | - | - | 26.5K | 349C | - | - | |
| 6696 | - | 100 | 50 | 12WF120 | - | - | - | - | - | - | 70.7K | 70.7K | - | - | |
| 6697 | - | 100 | 50 | 12WF85 | - | - | - | - | - | - | 54.1K | 102B | - | - | |
| 6698 | - | 100 | 50 | 12WF58 | - | - | - | - | - | - | 101B | 53.0K | - | - | |
| 6699 | - | 100 | 50 | 12WF58 | - | - | - | - | - | - | 53.0K | 53.0K | - | - | |

LICENSED PROFESSIONAL ENGINEER ★ LESLIE E. ROBERTSON ★ No. 34860 ★ UNIVERSITY OF THE STATE OF NEW YORK

5-AB1-201

**SKILLING, HELLE, CHRISTIANSEN, ROBERTSON** — **Structural & Civil Engineers**

PROJECT: THE WORLD TRADE CENTER | TITLE: BEAM SCHEDULE TOWERS A AND B | DATE: 12/ 6/68

REVISIONS

| BEAM NO. | SIZE | TYPE | FY | SHAPE | PLATE 1 WIDTH | PLATE 1 THICK | PLATE 2 WIDTH | PLATE 2 THICK | DIMENSIONS LENGTH | DIMENSIONS DIM. A | SUPPORTS LEFT | SUPPORTS RIGHT | STUDS NO. | STUDS SIZE | REMARKS |
|---|---|---|---|---|---|---|---|---|---|---|---|---|---|---|---|
| 6700 | - | 100 | 50 | 12WF58 | - | - | - | - | - | - | 101B | 53.0K | - | - | |
| 6701 | - | 100 | 50 | 12WF40 | - | - | - | - | - | - | 35.3K | 35.3K | - | - | |
| 6702 | - | 100 | 50 | 12WF92 | - | - | - | - | - | - | 751B | 101B | - | - | |
| 6703 | - | 100 | 50 | 12WF92 | - | - | - | - | - | - | 752B | 54.1K | - | - | |
| 6704 | - | 100 | 50 | 12WF45 | - | - | - | - | - | - | 101B | 101B | - | - | |
| 6705 | - | 100 | 50 | 12WF45 | - | - | - | - | - | - | 53.0K | 53.0K | - | - | X |
| 6706 | - | 100 | 36 | 12WF92 | - | - | - | - | - | - | 102 | 102 | - | - | |
| 6707 | - | 100 | 50 | 12WF50 | - | - | - | - | - | - | 53.0K | 102B | - | - | |
| 6708 | - | 100 | 36 | 10WF21 | - | - | - | - | - | - | 751A | 101B | - | - | |
| 6709 | 16X7 WF | 402 | 36 | 16WF45 | 4 | 3/8 | - | - | 21FT 0 | - | 274A | 282A | 26 | 3/4X3 | 1 |
| 6710 | - | 100 | 36 | 12WF36 | - | - | - | - | - | - | 102B | 102B | - | - | |
| 6711 | - | 100 | 36 | 12WF27 | - | - | - | - | - | - | 102B | 26.5K | - | - | |
| 6712 | - | 100 | 36 | 12WF27 | - | - | - | - | - | - | 751A | 101B | - | - | |
| 6713 | - | 100 | 50 | 12WF50 | - | - | - | - | - | - | 102B | 102B | - | - | |
| 6714 | 16X7 WF | 402 | (50) | 16WF36 | 4 | 3/8 | - | - | 21FT 0 | - | 106A | 106B | 30 | 3/4X3 | |
| 6715 | - | 100 | 36 | 12WF40 | - | - | - | - | - | - | 26.5K | 752B | - | - | |
| 6716 | - | 100 | 36 | 12WF40 | - | - | - | - | - | - | 26.5K | 751B | - | - | |
| 6717 | - | 100 | 36 | 12WF40 | - | - | - | - | - | - | 102 | 752 | - | - | |
| 6718 | - | 100 | 36 | 12WF27 | - | - | - | - | - | - | 26.5K | 26.5K | - | - | |
| 6719 | 16X7 WF | 402 | (50) | 16WF45 | 4 | 3/8 | - | - | 21FT 0 | - | 338D | 274A | 26 | 3/4X3 | 1 |
| 6720 | - | 100 | 50 | 12WF50 | - | - | - | - | - | - | 107A | 107A | - | - | |
| 6721 | - | 100 | 50 | 12WF58 | - | - | - | - | - | - | 53.0K | 53.0K | - | - | |
| 6722 | - | 100 | 50 | 12WF58 | - | - | - | - | - | - | 53.0K | 102B | - | - | |
| 6723 | - | 100 | 50 | 12WF53 | - | - | - | - | - | - | 102B | 53.0K | - | - | |
| 6724 | - | 100 | 50 | 12WF45 | - | - | - | - | - | - | 35.3K | 35.3K | - | - | |
| 6725 | - | 100 | 50 | 12WF36 | - | - | - | - | - | - | 26.5K | 26.5K | - | - | |
| 6726 | - | 100 | 36 | 12WF45 | - | - | - | - | - | - | 751B | 751B | - | - | |
| 6727 | - | 100 | 50 | 12WF79 | - | - | - | - | - | - | 109A | 108B | - | - | |
| 6728 | - | 100 | 50 | 12WF72 | - | - | - | - | - | - | 101B | 101B | - | - | |
| 6729 | - | 100 | 50 | 12WF65 | - | - | - | - | - | - | 101B | 54.1K | - | - | |
| 6730 | - | 100 | 50 | 12WF58 | - | - | - | - | - | - | 101B | 35.3K | - | - | |
| 6731 | - | 700 | 36 | 12WF27 | - | - | - | - | - | - | 739 | 739 | 36 | 3/4X3 | |
| 6732 | - | 700 | 36 | 12WF27 | 8 1/2 | 1/2 | - | - | SEE SUPT. | DET. | 728A | 739 | 36 | 3/4X3 | |
| 6733 | - | 100 | 36 | 12WF27 | - | - | - | - | - | - | 736 | 26.5K | - | - | |

REMARKS

1 SEE BEAM TYPE 404 FOR STUD PLACEMENT

LICENSED PROFESSIONAL ENGINEER ☆ LESLIE E. ROBERTSON ☆ No. 34360 ☆ UNIVERSITY OF THE STATE OF NEW YORK

5-AB1-202

**SKILLING, HELLE, CHRISTIANSEN, ROBERTSON** — **Structural & Civil Engineers**

PROJECT: THE WORLD TRADE CENTER | TITLE: BEAM SCHEDULE TOWERS A AND B | DATE: 7/17/68

REVISIONS

| BEAM NO. | SIZE | TYPE | FY | PLATE 1 SHAPE | PLATE 1 WIDTH | PLATE 1 THICK | PLATE 2 WIDTH | PLATE 2 THICK | DIMENSIONS LENGTH | DIM. A | SUPPORTS LEFT | SUPPORTS RIGHT | STUDS NO. | STUDS SIZE | REMARKS |
|---|---|---|---|---|---|---|---|---|---|---|---|---|---|---|---|
| 6734 | - | 700 | 36 | 16WF36 | 9 | 1/2 | - | - | SEE SUPT. DET. | | 736D | 739 | 36 | 3/4X3 | |
| 6735 | - | 700 | 36 | 16WF36 | 9 | 1/2 | - | - | SEE SUPT.DET. | | 739 | 733A | 52 | 3/4X3 | |
| 6736 | - | 100 | 36 | 12WF27 | - | - | - | - | - | - | 780 | 26.5K | - | - | |
| 6737 | - | 100 | 36 | 12WF27 | - | - | - | - | - | - | 735 | 102 | - | - | |
| 6738 | - | 700 | 36 | 16WF36 | 9 | 1/2 | - | - | SEE SUPT. DET. | | 733A | 731 | 24 | 3/4X3 | |
| 6739 | - | 700 | 50 | 16WF36 | 9 | 1/2 | - | - | SEE SUPT. DET | | 702 | 705 | 48 | 3/4X3 | |
| 6740 | - | 700 | 36 | 16WF40 | 9 | 1/2 | - | - | SEE SUPT. DET. | | 709 | 711A | 52 | 3/4X3 | |
| 6741 | - | 700 | 36 | 16WF40 | 9 | 1/2 | - | - | SEE SUPT. DET. | | 711A | 713 | 52 | 3/4X3 | |
| 6742 | - | 700 | 50 | 18WF45 | 9 1/2 | 1/2 | - | - | SEE SUPT.DET. | | 709C | 710 | 58 | 3/4X3 | |
| 6743 | - | 700 | 36 | 16WF36 | 9 | 1/2 | - | - | SEE SUPT. DET. | | 705 | 711A | 40 | 3/4X3 | |
| 6744 | - | 700 | 50 | 16WF45 | 9 | 1/2 | - | - | SEE SUPT. DET. | | 739 | 710 | 58 | 3/4X3 | |
| 6745 | - | 700 | 50 | 16WF45 | 9 | 1/2 | - | - | SEE SUPT. DET. | | 710 | 739 | 58 | 3/4X3 | |
| 6746 | - | 700 | 36 | 16WF40 | 9 | 1/2 | - | - | SEE SUPT. DET. | | 709 | 711A | 52 | 3/4X3 | |
| 6747 | - | 700 | 36 | 16WF40 | 9 | 1/2 | - | - | SEE SUPT. DET. | | 711A | 712 | 52 | 3/4X3 | |
| 6748 | - | 700 | 50 | 16WF36 | 9 | 1/2 | - | - | SEE SUPT. DET. | | 702 | 705 | 48 | 3/4X3 | |
| 6749 | - | 700 | 36 | 16WF36 | 9 | 1/2 | - | - | SEE SUPT. DET. | | 711A | 705 | 40 | 3/4X3 | |
| 6750 | - | 700 | 36 | 12WF27 | 8 1/2 | 1/2 | - | - | SEE SUPT.DET. | | 739 | 738A | 36 | 3/4X3 | |
| 6751 | - | 100 | 36 | 12WF27 | - | - | - | - | - | - | 26.5K | 738 | - | - | |
| 6752 | - | 700 | 36 | 12WF27 | 8 1/2 | 1/2 | - | - | SEE SUPT.DET. | | 739 | 736A | 36 | 3/4X3 | |
| 6753 | - | 700 | 36 | 12WF27 | 8 1/2 | 1/2 | - | - | SEE SUPT. DET. | | 739 | 739 | 36 | 3/4X3 | |
| 6754 | - | 100 | 36 | 12WF27 | - | - | - | - | - | - | 26.5K | 736 | - | - | |
| 6755 | - | 700 | 36 | 12WF27 | 8 1/2 | 1/2 | - | - | SEE SUPT.DET. | | 739 | 735A | 36 | 3/4X3 | |
| 6756 | - | 700 | 36 | 16WF36 | 9 | 1/2 | - | - | SEE SUPT. DET. | | 731 | 736A | 24 | 3/4X3 | |
| 6757 | - | 700 | 50 | 18WF55 | 9 1/2 | 1/2 | - | - | SEE SUPT.DET. | | 728A | 780A | 72 | 3/4X3 | |
| 6758 | - | 100 | 36 | 20875.0 | - | - | - | - | - | - | 202B | 234D | - | - | |
| 6759 | - | 700 | 50 | 16WF40 | 9 | 1/2 | - | - | SEE SUPT.DET. | | 739 | 733A | 52 | 3/4X3 | |
| 6760 | - | 700 | 50 | 16WF40 | 9 | 1/2 | - | - | SEE SUPT. DET. | | 729 | 735A | 52 | 3/4X3 | |
| 6761 | - | 100 | 50 | 12WF65 | - | - | - | - | - | - | 515E | 515E | - | - | |
| 6762 | - | 700 | 50 | 18WF50 | 9-1/2 | 1/2 | - | - | SEE SUPT.DET. | | 728A | 733A | 65 | 3/4X3 | |
| 6763 | - | 700 | 50 | 16WF40 | 9 | 1/2 | - | - | SEE SUPT.DET. | | 739 | 733A | 52 | 3/4X3 | |
| 6764 | - | 700 | 50 | 16WF40 | 9 | 1/2 | - | - | SEE SUPT.DET. | | 729A | 735A | 52 | 3/4X3 | |
| 6765 | - | 700 | 50 | 16WF40 | 9 | 1/2 | - | - | SEE SUPT. DET. | | 739 | 733A | 52 | 3/4X3 | |
| 6766 | - | 100 | 50 | 16WF40 | - | - | - | - | - | - | 731A | 781B | 52 | 3/4X3 | |

LICENSED PROFESSIONAL ENGINEER — LESLIE E. ROBERTSON — No. 34360 — UNIVERSITY OF THE STATE OF NEW YORK

5-A31-208

**SKILLING-HELLE-CHRISTIANSEN-ROBERTSON** — **Civil & Structural Engineers**

PROJECT: THE WORLD TRADE CENTER | TITLE: BEAM SCHEDULE TOWERS A AND B | DATE: 7/17/68

REVISIONS

| BEAM NO. | SIZE | TYPE | FY | SHAPE | PLATE 1 WIDTH | PLATE 1 THICK | PLATE 2 WIDTH | PLATE 2 THICK | DIMENSIONS LENGTH | DIMENSIONS DIM. A | SUPPORTS LEFT | SUPPORTS RIGHT | STUDS NO. | STUDS SIZE | REMARKS |
|---|---|---|---|---|---|---|---|---|---|---|---|---|---|---|---|
| 6767 | - | 70C | 50 | 16WF40 | 9 | 1/2 | - | - | SEE SUPT.DET. | | 729A | 733A | 52 | 3/4X3 | |
| 6768 | - | 70C | 50 | 16WF40 | 9 | 1/2 | - | - | SEE SUPT.DET. | | 739 | 734A | 52 | 3/4X3 | |
| 6769 | - | 70C | 50 | 18WF55 | 9 1/2 | 1/2 | - | - | SEE SUPT.DET. | | 728A | 733A | 72 | 3/4X3 | 1 |
| 677C | - | 10C | 50 | 12WF79 | - | - | - | - | - | - | 234D | 234D | - | - | |
| 6771 | - | 10C | 36 | 20I75.0 | - | - | - | - | - | - | 234D | 234C | - | - | |
| 6772 | - | 10C | 36 | 20I75.0 | - | - | - | - | - | - | 234C | 234A | - | - | X |
| 6773 | - | 10C | 36 | 20I75.0 | - | - | - | - | - | - | 234A | 202B | - | - | |
| 6774 | - | 70C | 50 | 16WF36 | 9 | 1/2 | - | - | SEE SUPT.DET. | | 739 | 728A | 48 | 3/4X3 | |
| 6775 | - | 70C | 50 | 18WF45 | 9 1/2 | 1/2 | - | - | SEE SUPT.DET. | | 739 | 739 | 58 | 3/4X3 | |
| 6776 | - | 10C | 50 | 18WF45 | - | - | - | - | - | - | 739 | 729A | 58 | 3/4X3 | |
| 6777 | - | 70C | 50 | 18WF45 | 9 1/2 | 1/2 | - | - | SEE SUPT.DET. | | 739 | 729A | 58 | 3/4X3 | |
| 6778 | - | 70C | 50 | 18WF50 | 9 1/2 | 1/2 | - | - | SEE SUPT.DET. | | 731 | 728A | 60 | 3/4X3 | 1 |
| 6779 | - | 10C | 50 | 12WF72 | - | - | - | - | - | - | 515E | 515E | - | - | |
| 6780 | - | 10C | 36 | 12WF58 | - | - | - | - | - | - | 515E | 515E | - | - | |
| 6781 | - | 70C | 50 | 18WF50 | 9 1/2 | 1/2 | - | - | SEE SUPT.DET. | | 729 | 728A | 60 | 3/4X3 | |
| 6782 | - | 70C | 50 | 18WF55 | 9 1/2 | 1/2 | - | - | SEE SUPT.DET. | | 739 | 729A | 65 | 3/4X3 | |
| 6783 | - | 70C | 50 | 18WF69 | 10 3/4 | 1/2 | - | - | SEE SUPT.DET. | | 731 | 702 | 82 | 3/4X3 | |
| 6784 | - | 10C | 50 | 18WF85 | - | - | - | - | SEE SUPT.DET. | | 731A | 729A | 90 | 3/4X3 | |
| 6785 | - | 70C | 50 | 16WF36 | 9 | 1/2 | - | - | SEE SUPT.DET. | | 729A | 729A | 24 | 3/4X3 | |
| 6786 | - | 70C | 50 | 18WF55 | 9 1/2 | 1/2 | - | - | SEE SUPT.DET. | | 729A | 739 | 65 | 3/4X3 | |
| 6787 | - | 70C | 50 | 18WF64 | 10 3/4 | 1/2 | - | - | SEE SUPT.DET. | | 702A | 731 | 82 | 3/4X3 | |
| 6788 | - | 70C | 50 | 18WF45 | 9-1/2 | 1/2 | - | - | SEE SUPT. DET. | | 702 | 703 | 58 | 3/4X3 | |
| 6789 | - | 70C | 50 | 18WF45 | 9-1/2 | 1/2 | - | - | SEE SUPT. DET. | | 703 | 703 | 58 | 3/4X3 | |
| 6790 | - | 70C | 50 | 18WF45 | 9-1/2 | 1/2 | - | - | SEE SUPT. DET. | | 703 | 703A | 58 | 3/4X3 | |
| 6791 | - | 70C | 50 | 18WF70 | 10 3/4 | 1/2 | - | - | SEE SUPT.DET | | 736B | 739 | 86 | 3/4X3 | |
| 6792 | - | 70C | 50 | 18WF60 | 9 1/2 | 1/2 | - | - | SEE SUPT.DET. | | 739 | 729A | 75 | 3/4X3 | |
| 6793 | - | 70C | 50 | 18WF70 | 10 3/4 | 1/2 | - | - | SEE SUPT.DET. | | 739 | 736B | 86 | 3/4X3 | |
| 6794 | - | 10C | 50 | 18WF60 | - | - | - | - | - | - | 70.7K | 70.7K | 75 | 3/4X3 | |
| 6795 | - | 70C | 36 | 16WF45 | 9 | 1/2 | - | - | SEE SUPT. DET. | | 702 | 709 | 45 | 3/4X3 | |
| 6796 | - | 70C | 36 | 16WF45 | 9 | 1/2 | - | - | SEE SUPT. DET. | | 709 | 702 | 45 | 304X3 | |
| 6797 | - | 10C | 36 | 18WF45 | - | - | - | - | - | - | 705C | 703B | 30 | 3/4X3 | |
| 6798 | - | 70C | 50 | 18WF50 | 9 | 1/2 | - | - | SEE SUPT.DET. | | 739 | 729A | 60 | 3/4X3 | |
| 6799 | - | 70C | 50 | 18WF50 | 9 | 1/2 | - | - | SEE SUPT.DET. | | 735C | 729A | 62 | 3/4X3 | |

REMARKS

1 DETAIL 728A, LESS SECTION B-B

LICENSED PROFESSIONAL ENGINEER — LESLIE E. ROBERTSON — No. 34360 — UNIVERSITY OF THE STATE OF NEW YORK

5-AB1-204

**SKILLING, HELLE, CHRISTIANSEN, ROBERTSON** — Structural & Civil Engineers

PROJECT: THE WORLD TRADE CENTER | TITLE: BEAM SCHEDULE TOWERS A AND B | DATE: 7/17/68

REVISIONS

| BEAM NO. | SIZE | TYPE | FY | PLATE 1 SHAPE | PLATE 1 WIDTH | PLATE 1 THICK | PLATE 2 WIDTH | PLATE 2 THICK | DIMENSIONS LENGTH | DIMENSIONS DIM. A | SUPPORTS LEFT | SUPPORTS RIGHT | STUDS NO. | STUDS SIZE | REMARKS |
|---|---|---|---|---|---|---|---|---|---|---|---|---|---|---|---|
| 6800 | - | 700 | 50 | 16WF45 | 9 | 1/2 | - | - | SEE SUPT. DET. | | 728A | 728A | 56 | 3/4X3 | |
| 6801 | - | 700 | 50 | 16WF36 | 9 | 1/2 | - | - | SEE SUPT. DET. | | 728A | 739 | 48 | 3/4X3 | |
| 6802 | - | 700 | 36 | 12WF27 | 8 1/2 | 1/2 | - | - | SEE SUPT. DET. | | 735A | 728A | 30 | 3/4X3 | |
| 6803 | - | 100 | 36 | 12WF27 | - | - | - | - | - | - | 736A | 739 | 30 | 3/4X3 | |
| 6804 | - | 700 | 36 | 12WF27 | 8-1/2 | 1/2 | - | - | SEE SUPT. DET. | | 781A | 739 | 36 | 3/4X3 | |
| 6805 | - | 700 | 50 | 18WF50 | 9-1/2 | 1/2 | - | - | SEE SUPT. DET. | | 739 | 739 | 60 | 3/4X3 | X |
| 6806 | - | 700 | 50 | 18WF50 | 9-1/2 | 1/2 | - | - | SEE SUPT. DET. | | 729A | 739 | 60 | 3/4X3 | |
| 6807 | - | 700 | 50 | 18WF55 | 9-1/2 | 1/2 | - | - | SEE SUPT. DET. | | 739 | 739 | 64 | 3/4X3 | |
| 6808 | 16X7 WF | 402 | 36 | 16WF45 | 4 | 3/8 | - | - | 21FT 0 | - | 2748 | 282A | 26 | 3/4X3 | 2 |
| 6809 | - | 700 | 50 | 18WF77 | 10-3/4 | 1/2 | - | - | SEE SUPT. DET. | | 731A | 728A | 84 | 3/4X3 | |
| 6810 | - | 700 | 50 | 18WF60 | 9-1/2 | 1/2 | - | - | SEE SUPT. DET. | | 782A | 729A | 68 | 3/4X3 | |
| 6811 | - | 700 | 50 | 18WF60 | 9-1/2 | 1/2 | - | - | SEE SUPT. DET. | | 729A | 739 | 68 | 3/4X3 | |
| 6812 | - | 100 | 36 | 18WF45 | - | - | - | - | - | - | 463C | 463F | 28 | 3/4X3 | |
| 6813 | - | 100 | 36 | 18WF45 | - | - | - | - | - | - | 463F | 463F | 14 | 3/4X3G | |
| 6814 | - | 100 | 36 | 18WF45 | - | - | - | - | - | - | 463F | 463F | 28 | 3/4X3G | |
| 6815 | - | 100 | 36 | 18WF45 | - | - | - | - | - | - | 463F | 26.5K | 14 | 3/4X3G | |
| 6816 | - | 100 | 36 | 24179.9 | - | - | - | - | - | - | 234G | 234F | 42 | 3/4X3 | |
| 6817 | - | 100 | 36 | 24179.9 | - | - | - | - | - | - | 234F | 234G | - | - | |
| 6818 | - | 100 | 36 | 241105.9 | - | - | - | - | - | - | 234G | 234G | - | - | |
| 6819 | 18X7-1/2WF | 400 | 36 | 18WF45 | 6-1/4 | 3/8 | - | - | 32FT 3 | - | 64.8K | 155 | 49 | 3/4X3 | |
| 6820 | 18X7-1/2WF | 400 | 36 | 18WF45 | 6-1/4 | 3/8 | - | - | 32FT 3 | - | 81.4K | 155 | 49 | 3/4X3 | |
| 6821 | - | 100 | 36 | 12B19 | - | - | - | - | - | - | 111U | 111U | - | - | |
| 6822 | - | 100 | 36 | 14B22 | - | - | - | - | - | - | 508 | 509E | - | - | |
| 6823 | - | 100 | 36 | 8B13 | - | - | - | - | - | - | 17.4K | 771B | - | - | |
| 6824 | - | 100 | 36 | 10WF39 | - | - | - | - | - | - | 26.5K | 509E | - | - | |
| 6825 | - | 100 | 36 | 10WF39 | - | - | - | - | - | - | 26.5K | 509E | - | - | |
| 6826 | - | 100 | 36 | 10WF39 | - | - | - | - | - | - | 101B | 26.5K | - | - | |
| 6827 | - | 100 | 36 | 10WF39 | - | - | - | - | - | - | 26.5K | 26.5K | - | - | |
| 6828 | - | 100 | 36 | 10WF33 | - | - | - | - | - | - | 509E | 26.5K | - | - | |
| 6829 | - | 100 | 36 | 16WF40 | - | - | - | - | - | - | 509E | 509E | - | - | |
| 6830 | - | 100 | 36 | 16WF36 | - | - | - | - | - | - | 509E | 509E | - | - | |
| 6831 | - | 100 | 36 | 8B13 | - | - | - | - | - | - | 509D | 771B | - | - | |
| 6832 | - | 100 | 36 | 8B13 | - | - | - | - | - | - | 752A | 17.4K | - | - | |
| 6833 | - | 100 | 36 | 10WF25 | - | - | - | - | - | - | 509E | 509E | - | - | |

REMARKS

2 SEE BEAM TYPE 404 FOR STUD PLACEMENT

LICENSED PROFESSIONAL ENGINEER — LESLIE E. ROBERTSON — No. 54360 — NEW YORK — UNIVERSITY CE...

5-AB1-205

**SKILLING-HELLE-CHRISTIANSEN-ROBERTSON** — **Civil & Structural Engineers**

PROJECT: THE WORLD TRADE CENTER | TITLE: BEAM SCHEDULE TOWERS A AND B | DATE: 3/11/68

REVISIONS

| | SIZE | TYPE | FY | SHAPE | PLATE 1 WIDTH | PLATE 1 THICK | PLATE 2 WIDTH | PLATE 2 THICK | DIMENSIONS LENGTH | DIMENSIONS DIM. A | SUPPORTS LEFT | SUPPORTS RIGHT | STUDS NO. | STUDS SIZE | REMARKS |
|---|---|---|---|---|---|---|---|---|---|---|---|---|---|---|---|
| [illegible]4 | - | 100 | 36 | 10WF25 | - | - | - | - | - | - | 26.5K | 509E | - | - | |
| [illegible]5 | - | 100 | 36 | 10WF29 | - | - | - | - | - | - | 509E | 507 | - | - | 1 |
| [illegible] | - | 100 | 36 | 10WF29 | - | - | - | - | - | - | 507 | 509E | - | - | 2 |
| [illegible] | - | 100 | 36 | 10WF21 | - | - | - | - | - | - | 509E | 509E | - | - | |
| [illegible]6 | - | 100 | 36 | 10WF29 | - | - | - | - | - | - | 205R | 205R | - | - | 2,3 |
| [illegible]9 | - | 100 | 36 | 10WF29 | - | - | - | - | - | - | 364F | 205R | - | - | 1 |
| 6840 | - | 100 | 36 | 10WF21 | - | - | - | - | - | - | 330A | 364F | - | - | |
| 6841 | - | 100 | 36 | 10WF45 | - | - | - | - | - | - | 283G | 509E | - | - | |
| [illegible]2 | - | 100 | 36 | 10WF29 | - | - | - | - | - | - | 509E | 509E | - | - | |
| [illegible]3 | - | 100 | 36 | 10WF29 | - | - | - | - | - | - | 509E | 509E | - | - | |
| [illegible] | - | 100 | 36 | 10WF33 | - | - | - | - | - | - | 220I | 364F | - | - | |
| [illegible] | - | 100 | 36 | 10WF33 | - | - | - | - | - | - | 26.5K | 509E | - | - | |
| [illegible] | - | 100 | 36 | 10WF29 | - | - | - | - | - | - | 364F | 364F | - | - | |
| [illegible]7 | - | 100 | 36 | 10WF33 | - | - | - | - | - | - | 26.5K | 26.5K | - | - | |
| [illegible]8 | - | 100 | 36 | 10WF45 | - | - | - | - | - | - | 111A | 509E | - | - | |
| [illegible]49 | - | 100 | 36 | 10WF21 | - | - | - | - | - | - | 26.5K | 509E | - | - | |
| 6850 | - | 100 | 36 | 10WF21 | - | - | - | - | - | - | 26.5K | 26.5K | - | - | |
| 6851 | - | 100 | 36 | 10WF33 | - | - | - | - | - | - | 102B | 111A | - | - | |
| 6852 | - | 100 | 36 | 10WF21 | - | - | - | - | - | - | 752A | 102B | - | - | |
| [illegible]3 | - | 100 | 36 | 10WF21 | - | - | - | - | - | - | 751A | 26.5K | - | - | |
| 6854 | - | 100 | 36 | 10WF21 | - | - | - | - | - | - | 752A | 26.5K | - | - | |
| 6855 | - | 100 | 36 | 10WF45 | - | - | - | - | - | - | 101B | 509E | - | - | |
| 6856 | - | 100 | 36 | 10WF33 | - | - | - | - | - | - | 26.5K | 26.5K | - | - | |
| 6857 | - | 100 | 36 | 10WF33 | - | - | - | - | - | - | 509E | 509E | - | - | |
| 6858 | - | 100 | 36 | 10WF33 | - | - | - | - | - | - | 509E | 509E | - | - | |
| 6859 | - | 100 | 36 | 10WF33 | - | - | - | - | - | - | 509E | 111A | - | - | 4 |
| 6860 | - | 100 | 36 | 10WF33 | - | - | - | - | - | - | 509E | 101B | - | - | |
| 6861 | - | 100 | 36 | 10WF33 | - | - | - | - | - | - | 509E | 509E | - | - | |
| 6862 | - | 100 | 36 | 10WF33 | - | - | - | - | - | - | 26.5K | 26.5K | - | - | |
| [illegible]3 | - | 100 | 36 | 10WF33 | - | - | - | - | - | - | 509E | 101B | - | - | |
| [illegible]4 | - | 100 | 50 | 10WF49 | - | - | - | - | - | - | 102B | 102B | - | - | |
| [illegible]5 | - | 100 | 36 | 10WF49 | - | - | - | - | - | - | 102B | 26.5K | - | - | |
| [illegible]6 | - | 100 | 36 | 10WF33 | - | - | - | - | - | - | 751A | 107A | - | - | 4 |

REMARKS

1 DET. 435A RIGHT END OF BEAM
2 DET. 435A LEFT END OF BEAM
3 DET. 509E RIGHT END OF BEAM
4 ADAPT END DETAIL FOR SKEW TYPE CONN.

LICENSED PROFESSIONAL ENGINEER — LESLIE E. ROBERTSON — No. 34360 — UNIVERSITY OF THE STATE OF NEW YORK

5-AB1-206

**SKILLING-HELLE-CHRISTIANSEN-ROBERTSON** — **Civil & Structural Engineers**

PROJECT: THE WORLD TRADE CENTER | TITLE: BEAM SCHEDULE TOWERS A AND B | DATE: 8/17/68

REVISIONS

| BEAM NO. | SIZE | TYPE | FY | PLATE 1 SHAPE | PLATE 1 WIDTH | PLATE 1 THICK | PLATE 2 WIDTH | PLATE 2 THICK | DIMENSIONS LENGTH | DIMENSIONS DIM. A | SUPPORTS LEFT | SUPPORTS RIGHT | STUDS NO. | STUDS SIZE | REMARKS |
|---|---|---|---|---|---|---|---|---|---|---|---|---|---|---|---|
| 6867 | 16X8-1/2WF | 400 | 36 | 16WF58 | 7-1/2 | 7/16 | - | - | 32FT 3 | - | 68.9K | 161 | 62 | 3/4X3 | |
| 6868 | 16X8-1/2WF | 400 | 36 | 16WF58 | 7-1/2 | 7/16 | - | - | 32FT 3 | - | 86.5K | 161 | 62 | 3/4X3 | |
| 6869 | - | 100 | 36 | 16WF58 | - | - | - | - | - | - | 26.5K | 463F | 14 | 3/4X3 | |
| 6870 | - | 100 | 36 | 16WF58 | - | - | - | - | - | - | 463F | 463C | 28 | 3/4X3 | |
| 6871 | - | 100 | 36 | 16WF58 | - | - | - | - | - | - | 463C | 463C | 14 | 3/4X3 | |
| 6872 | - | 100 | 36 | 16WF58 | - | - | - | - | - | - | 463C | 463F | 28 | 3/4X3 | X |
| 6873 | - | 100 | 36 | 16WF58 | - | - | - | - | - | - | 463F | 463F | 14 | 304X3G | |
| 6874 | - | 100 | 36 | 16WF58 | - | - | - | - | - | - | 463F | 463F | 28 | 3/4X3G | |
| 6875 | - | 100 | 36 | 16WF58 | - | - | - | - | - | - | 463F | 26.5K | 14 | 3/4X3G | |
| 6876 | - | 100 | 36 | 24179.9 | - | - | - | - | - | - | 202C | 812F | - | - | |
| 6877 | - | 100 | 36 | 24179.9 | - | - | - | - | - | - | 812F | 234A | 42 | 3/4X3 | |
| 6878 | - | 100 | 36 | 24179.9 | - | - | - | - | - | - | 234A | 234E | - | - | |
| 6879 | - | 100 | 36 | 241105.9 | - | - | - | - | - | - | 234E | 812G | - | - | |
| 6880 | - | 100 | 36 | 24179.9 | - | - | - | - | - | - | 812G | 202C | - | - | |
| 6881 | 24X14WF | 453 | 36 | 27WF145 | 12-3/4 | 1-1/2 | - | - | 32FT 0 | - | 237E | 152 | 194 | 3/4X3 | |
| 6882 | - | 420 | 36 | 27WF84 | - | - | - | - | - | - | 251A | 237E | 64 | 3/4X3 | |
| 6883 | 24X8BU | 300 | 36 | - | 8 | 1-1/2 | 21 | 5/8 | - | - | 234G | 237E | - | - | |
| 6884 | 27X14WF | 453 | 36 | 27WF145 | 12-3/4 | 1-1/2 | - | - | 32FT 0 | | 237F | 152 | 194 | 3/4X3 | |
| 6885 | - | 100 | 36 | 27WF84 | - | - | - | - | - | - | 251A | 237F | 64 | 3/4X3 | |
| 6886 | 24X8BU | 300 | 36 | - | 8 | 1-1/2 | 21 | 5/8 | - | - | 237F | 234G | - | - | |
| 6887 | - | 100 | 36 | 18WF45 | - | - | - | - | - | - | 26.5K | 463F | 14 | 3/4X3 | |
| 6888 | - | 100 | 36 | 18WF45 | - | - | - | - | - | - | 463F | 463C | 28 | 3/4X3 | |
| 6889 | - | 100 | 36 | 18WF45 | - | - | - | - | - | - | 463C | 463C | 14 | 3/4X3 | |
| 6890 | - | 100 | 36 | 8B15 | - | - | - | - | - | - | 17.4K | 771A | - | - | |
| 6891 | - | 100 | 50 | 16WF78 | - | - | - | - | - | - | 775A | 775A | - | - | |
| 6892 | - | 100 | 50 | 16WF78 | - | - | - | - | - | - | 70.7K | 70.7K | - | - | |
| 6893 | - | 100 | 50 | 16WF78 | - | - | - | - | - | - | 109A | 70.7K | - | - | |
| 6894 | - | 100 | 50 | 16WF78 | - | - | - | - | - | - | 70.7K | 109A | - | - | |
| 6895 | - | 100 | 50 | 16WF78 | - | - | - | - | - | - | 536A | 535A | - | - | |
| 6896 | - | 100 | 50 | 16WF78 | - | - | - | - | - | - | 535A | 70.7K | - | - | |
| 6897 | - | 100 | 50 | 16WF78 | - | - | - | - | - | - | 535A | 107A | - | - | |
| 6898 | - | 100 | 50 | 16WF78 | - | - | - | - | - | - | 535A | 70.7K | - | - | |
| 6899 | - | 100 | 50 | 16WF78 | - | - | - | - | - | - | 535A | 70.7K | - | - | |

LICENSED PROFESSIONAL ENGINEER — LESLIE E. ROBERTSON — No. 34360 — UNIVERSITY OF THE STATE OF NEW YORK

5-AB1-207

THE WORLD TRADE CENTER | BEAM SCHEDULE TOWERS A AND B

| BEAM NO. | SIZE | TYPE | FY | SHAPE | PLATE 1 WIDTH | PLATE 1 THICK | PLATE 2 WIDTH | PLATE 2 THICK | DIMENSIONS LENGTH | DIMENSIONS DIM. A | SUPPORTS LEFT | SUPPORTS RIGHT | STUDS NO. | STUDS SIZE | REMARKS |
|---|---|---|---|---|---|---|---|---|---|---|---|---|---|---|---|
| 6900 | 12X4 B | 402 | 36 | 12B19 | 3 | 3/8 | - | - | 18FT 0 | - | 26.5K | 26.5K | - | - | |
| 6901 | 54X16BU | 300 | 36 | - | 16 | 1-1/2 | 51 | 5/8 | - | - | 777A | 109B | - | - | |
| 6902 | 16X7 WF | 402 | 36 | 16WF45 | 4 | 3/8 | - | - | 21FT 0 | - | 338D | 274B | 26 | 3/4X3 | 3 |
| 6903 | - | 100 | 50 | 24WF84 | - | - | - | - | - | - | 107A | 107A | - | - | |
| 6904 | - | 100 | 50 | 24WF84 | - | - | - | - | - | - | 107A | 774C | - | - | |
| 6905 | - | 100 | 50 | 16WF78 | - | - | - | - | - | - | 53.0K | 109A | - | - | |
| 6906 | - | 100 | 50 | 30WF116 | - | - | - | - | - | - | 109A | 109A | - | - | |
| 6907 | - | 100 | 50 | 24WF84 | - | - | - | - | - | - | 107A | 774C | - | - | |
| 6908 | - | 100 | 36 | 8CH8.0 | - | - | - | - | - | - | 18.0K | 18.0K | - | - | |
| 6909 | 16X5-1/2BX | 208 | 36 | - | 4 | 3/8 | 16 | 3/4 | - | - | 254B | 247A | - | - | |
| 6910 | - | 100 | 36 | 16WF36 | - | - | - | - | - | - | 26.5K | 105K | 10 | 3/4X4-1/2B | |
| 6911 | 16X5-1/2BX | 207 | 36 | - | 4 | 3/8 | 16 | 3/4 | - | - | 254B | 247A | - | - | |
| 6912 | 16X5-1/2BX | 203 | 36 | - | 4 | 3/8 | 16 | 3/4 | - | - | 254B | 206A | - | - | |
| 6913 | 16X5-1/2BX | 203 | 36 | - | 4 | 3/8 | 16 | 3/4 | - | - | 450 | 450 | - | - | |
| 6914 | - | 100 | 36 | 12B16.5 | - | - | - | - | - | - | 26.5K | 170A | - | - | |
| 6915 | 15X3-3/8CH | 510 | 50 | 15CH40.0 | 2-1/2 | 1/2 | - | - | 26FT 0 | 1FT 0 | 245D | 245C | - | - | 1 |
| 6916 | - | 100 | 36 | 16B31 | - | - | - | - | - | - | 307D | 26.5K | 28 | 3/4X3 | |
| 6917 | - | 100 | 36 | 8B13 | - | - | - | - | - | - | 111H | 508 | - | - | 2 |
| 6918 | - | 100 | 36 | 8B13 | - | - | - | - | - | - | 17.4K | 17.4K | - | - | |
| 6919 | - | 100 | 36 | 8B13 | - | - | - | - | - | - | 508 | 508 | - | - | 2 |
| 6920 | 18X4 CH | 509 | 50 | 18CH58.0 | 3 | 1/2 | - | - | FULL LENGTH | | 324A | 246D | - | - | |
| 6921 | - | 100 | 50 | 18CH51.9 | - | - | - | - | - | - | 410A | 47.1K | - | - | |
| 6922 | - | 100 | 50 | 18CH51.9 | - | - | - | - | - | - | 47.1K | 410A | - | - | |
| 6923 | [illegible] | [illegible] | 50 | 18CH58.0 | 3 | 1/2 | - | - | FULL LENGTH | | 246D | 324A | - | - | |
| 6924 | [illegible] | [illegible] | 50 | 18CH58.0 | 3 | 1/2 | - | - | FULL LENGTH | | 324A | 246D | - | - | |
| 6925 | - | 100 | 50 | 18CH45.8 | - | - | - | - | - | - | 410A | 412A | - | - | |
| 6926 | 18X4 CH | 501 | 50 | 18CH58.0 | 3 | 1 | - | - | 24FT 0 | 1FT 0 | 246D | 249C | - | - | |
| 6927 | - | 100 | 36 | 10CH25 | - | - | - | - | - | - | 249C | 249C | - | - | |
| 6928 | 18X4 CH | 516 | 50 | 18CH58.0 | 3 | 1 | - | - | 24FT 0 | 1FT 0 | 249C | 246D | - | - | |
| 6929 | - | 100 | 50 | 18CH45.8 | - | - | - | - | - | - | 411A | 410A | - | - | |
| 6930 | 18X4 CH | 505 | 50 | 18CH58.0 | 3 | 1/2 | - | - | FULL LENGTH | | 246D | 324A | - | - | |
| 6931 | 21X7 BU | 300 | 36 | - | 7 | 1-1/4 | 18-1/2 | 1/2 | - | - | 324A | 317C | - | - | |
| 6932 | - | 100 | 36 | 24WF36 | - | - | - | - | - | - | 317C | 324A | - | - | |
| 6933 | 24X7 BU | 400 | 36 | - | 7 | 1 | 22 | 3/8 | - | - | 220L | 313I | 20 | 3/4X3 | |

[illegible] SEE BEAM TYPE 404 FOR STUD PLACEMENT

5-AB1-208

**SKILLING, HELLE, CHRISTIANSEN, ROBERTSON** — **Structural & Civil Engineers**

PROJECT: THE WORLD TRADE CENTER | TITLE: BEAM SCHEDULE TOWERS A AND B | DATE: 11/27/68

REVISIONS

| BEAM NO. | SIZE | TYPE | FY | PLATE 1 SHAPE | PLATE 1 WIDTH | PLATE 1 THICK | PLATE 2 WIDTH | PLATE 2 THICK | DIMENSIONS LENGTH | DIMENSIONS DIM. A | SUPPORTS LEFT | SUPPORTS RIGHT | STUDS NO. | STUDS SIZE | REMARKS |
|---|---|---|---|---|---|---|---|---|---|---|---|---|---|---|---|
| 6933 | 24X7 BU | 300 | 36 | - | 7 | 1 | 22 | 3/8 | - | - | 220L | 313I | 20 | 3/4X3 | |
| 6934 | - | 100 | 50 | 14B22 | - | - | - | - | - | - | 313I | 26.5K | 20 | 3/4X3 | |
| 6935 | - | 100 | 36 | 14B22 | - | - | - | - | - | - | 313I | 238A | 8 | 3/4X3 | |
| 6936 | - | 100 | 36 | 30WF99 | - | - | - | - | - | - | 202G | 313I | 12 | 3/4X3 | |
| 6937 | 24X5-1/2BU | 300 | 36 | - | 5-1/2 | 1 | 22 | 3/8 | - | - | 475A | 39.8K | - | - | |
| 6938 | 24X5-1/2BX | 252 | 36 | - | 5-1/2 | 1-1/2 | 21 | 3/8 | - | - | 458A | 458A | - | - | |
| 6939 | 16X5-1/2BX | 201 | 36 | - | 4 | 3/8 | 16 | 3/4 | - | - | 296H | 247G | - | - | |
| 6940 | 24X7 BU | 300 | 36 | - | 7 | 1 | 22 | 3/8 | - | - | 295F | 313I | 20 | 3/4X3 | |
| 6941 | - | 100 | 36 | 14B22 | - | - | - | - | - | - | 313I | 266A | 8 | 3/4X3 | |
| 6942 | - | 100 | 36 | 30WF99 | - | - | - | - | - | - | 224C | 313I | 12 | 3/4X3 | |
| 6943 | 16X5-1/2BX | 201 | 36 | - | 4 | 3/8 | 16 | 3/4 | - | - | 296H | 296A | - | - | |
| 6944 | 30X7 BU | 300 | 36 | - | 7 | 1-1/2 | 27 | 7/8 | - | - | 295G | 313J | 20 | 3/4X3 | |
| 6945 | - | 100 | 36 | 14B22 | - | - | - | - | - | - | 313J | 26.5K | 20 | 3/4X3 | |
| 6946 | - | 100 | 36 | 14B22 | - | - | - | - | - | - | 313J | 238A | 8 | 3/4X3 | |
| 6947 | - | 100 | 36 | 30WF99 | - | - | - | - | - | - | 224C | 313J | 12 | 3/4X3 | |
| 6948 | 30X5-1/2BU | 300 | 36 | - | 5-1/2 | 1-1/2 | 27 | 3/8 | - | - | 475A | 54.1K | - | - | |
| 6949 | 30X5-1/2BX | 252 | 36 | - | 5-1/2 | 1-1/4 | 27-1/2 | 3/4 | - | - | 458A | 458A | - | - | |
| 6950 | 30X5-1/2BX | 252 | 36 | - | 5-1/2 | 3/4 | 28-1/2 | 3/8 | - | - | 296I | 296I | - | - | |
| 6951 | 18X5 BX | 252 | 36 | - | 5 | 1/2 | 17 | 1/2 | - | - | 458B | 458B | - | - | |
| 6952 | - | 100 | 36 | 18CH58.0 | - | - | - | - | - | - | 53.0K | 467C | - | - | |
| 6953 | 16X5-1/2BX | 201 | 36 | - | 4 | 3/8 | 16 | 3/4 | - | - | 254D | 206B | - | - | |
| 6954 | - | 100 | 36 | 16B31 | - | - | - | - | - | - | 254D | 254B | - | - | |
| 6955 | - | 100 | 36 | 14B26 | - | - | - | - | - | - | 454B | 454B | - | - | |
| 6956 | 24X7 BU | 300 | 36 | - | 7 | 1 | 22 | 3/8 | - | - | 303D | 395E | 20 | 3/4X3 | |
| 6957 | 24X5-1/2BU | 300 | 36 | - | 5-1/2 | 1 | 22 | 3/8 | - | - | 467B | 463E | - | - | |
| 6958 | 24X5-1/2BX | 252 | 36 | - | 5-1/2 | 1 | 22 | 3/8 | - | - | 247I | 247I | - | - | |
| 6959 | - | 100 | 36 | 30WF99 | - | - | - | - | - | - | 202G | 301D | 12 | 3/4X3 | |
| 6960 | - | 100 | 50 | 12B16.5 | - | - | - | - | - | - | 303D | 26.5K | 10 | 3/4X38 | |
| 6961 | - | 100 | 36 | 14B22 | - | - | - | - | - | - | 301D | 26.5K | 12 | 3/4X3C | |
| 6962 | - | 100 | 36 | 16WF36 | - | - | - | - | - | - | 395E | 306C | 10 | 3/4X3 | |
| 6963 | - | 100 | 36 | 12B16.5 | - | - | - | - | - | - | 510A | 510A | - | - | |
| 6964 | - | 100 | 36 | 12B16.5 | - | - | - | - | - | - | 454B | 454B | - | - | |
| 6965 | - | 100 | 36 | 16B31 | - | - | - | - | - | - | 463E | 463C | - | - | |
| 6966 | - | 100 | 36 | 18CH42.7 | - | - | - | - | - | - | 411B | 410A | - | - | |

LICENSED PROFESSIONAL ENGINEER — LESLIE E. ROBERTSON — No. 34960 — UNIVERSITY OF THE STATE OF NEW YORK

5-A81-209

**SKILLING-HELLE-CHRISTIANSEN-ROBERTSON** — **Civil & Structural Engineers**

PROJECT: THE WORLD TRADE CENTER | TITLE: BEAM SCHEDULE TOWERS A AND B | DATE: 9/27/68

REVISIONS

| BEAM NO. | SIZE | TYPE | FY | PLATE 1 SHAPE | PLATE 1 WIDTH | PLATE 1 THICK | PLATE 2 WIDTH | PLATE 2 THICK | DIMENSIONS LENGTH | DIMENSIONS DIM. A | SUPPORTS LEFT | SUPPORTS RIGHT | STUDS NO. | STUDS SIZE | REMARKS |
|---|---|---|---|---|---|---|---|---|---|---|---|---|---|---|---|
| 6967 | | | | 16WF36 | - | - | - | - | - | - | | | - | - | |
| 6968 | | | | 12B16.5 | - | - | - | - | - | - | | | 15 | 3/4X3 | |
| 6969 | | | | 12B19 | - | - | - | - | - | - | | | - | - | |
| 6971 | | | | 16B26 | - | - | - | - | - | - | | | 10 | 3/4X3 | |
| 6972 | | | | 14B22 | - | - | - | - | - | - | | | 19 | 3/4X3 | |
| 6974 | | | | 14B22 | - | - | - | - | - | - | | | 8 | 3/4X3 | |
| 6976 | | | | 16B26 | - | - | - | - | - | - | | | 10 | 3/4X3 | |
| 6977 | 18X4 CH | 500 | 50 | 18CH51.9 | - | - | - | - | - | - | 243A | 227A | - | - | |
| 6978 | - | 100 | 50 | 12CH50.0 | - | - | - | - | - | - | 226A | 311B | - | - | |
| 6979 | - | 100 | 36 | 14B22 | - | - | - | - | - | - | 17.4K | 203C | 11 | 3/4X3 | |
| 6980 | 21X7 BU | 300 | 36 | - | 7 | 1 | 19 | 5/8 | - | - | 313E | 324C | - | - | |
| 6981 | 18X4 CH | 509 | 50 | 18CH45.8 | - | - | - | - | - | - | 324C | 246A | - | - | |
| 6982 | - | 100 | 50 | 18CH45.8 | - | - | - | - | - | - | 246A | 324C | - | - | |
| 6983 | - | 403 | 50 | 30WF108 | - | - | - | - | - | - | 154 | 324C | 92 | 3/4X3 | |
| 6984 | - | 403 | 50 | 30WF108 | - | - | - | - | - | - | 324C | 154 | 92 | 3/4X3 | |
| 6985 | - | 100 | 36 | 12WF27 | - | - | - | - | - | - | 111H | 283U | 12 | 3/4X4-1/2 | |
| 6986 | - | 100 | 50 | 12CH50.0 | - | - | - | - | - | - | 311B | 226A | - | - | |
| 6987 | - | 100 | 50 | 12CH50.0 | - | - | - | - | - | - | 226A | 311C | - | - | |
| 6988 | - | 100 | 36 | 16WF40 | - | - | - | - | - | - | 26.5K | 374B | 39 | 3/4X3 | |
| 6989 | - | 100 | 36 | 16WF36 | - | - | - | - | - | - | 26.5K | 26.5K | 34 | 3/4X3 | |
| 6990 | - | 100 | 36 | 9CH13.4 | - | - | - | - | - | - | 517B | 501A | - | - | |
| 6991 | - | 100 | 36 | 9CH13.4 | - | - | - | - | - | - | 501A | 517A | - | - | |
| 6992 | - | 100 | 36 | 16WF36 | - | - | - | - | - | - | 398C | 26.5K | 20 | 3/4X3 | |
| 6993 | - | 100 | 36 | 16WF36 | - | - | - | - | - | - | 26.5K | 26.5K | 20 | 3/4X3 | |
| 6994 | - | 100 | 36 | 16WF36 | - | - | - | - | - | - | 26.5K | 26.5K | 20 | 3/4X3 | |
| 6998 | - | 100 | 36 | 10B15 | - | - | - | - | - | - | 17.4K | 17.4K | - | - | |
| 6999 | - | 100 | 36 | 10B15 | - | - | - | - | - | - | 179A | 17.4K | - | - | |

LICENSED PROFESSIONAL ENGINEER — LESLIE E. ROBERTSON — No. 34360 — UNIVERSITY OF THE STATE OF NEW YORK

5-A61-210

**SKILLING-HELLE-CHRISTIANSEN-ROBERTSON** — **Civil & Structural Engineers**

PROJECT: THE WORLD TRADE CENTER | TITLE: BEAM SCHEDULE TOWERS A AND B | DATE: 1/22/68

REVISIONS

| BEAM NO. | SIZE | TYPE | FY | PLATE 1 SHAPE | PLATE 1 WIDTH | PLATE 1 THICK | PLATE 2 WIDTH | PLATE 2 THICK | DIMENSIONS LENGTH | DIMENSIONS DIM. A | SUPPORTS LEFT | SUPPORTS RIGHT | STUDS NO. | STUDS SIZE | REMARKS |
|---|---|---|---|---|---|---|---|---|---|---|---|---|---|---|---|
| 7000 | - | 100 | 50 | 18WF45 | - | - | - | - | - | - | 850A | 845A | 6 | 3/4X3 | |
| 7001 | - | 100 | 50 | 18WF45 | - | - | - | - | - | - | 845A | 850A | 6 | 3/4X3 | |
| 7002 | - | 100 | 50 | 18WF45 | - | - | - | - | - | - | 848A | 844A | 16 | 3/4X3 | |
| 7003 | - | 100 | 50 | 18WF60 | - | - | - | - | - | - | 848A | 846A | 66 | 3/4X3 | |
| 7004 | - | 100 | 50 | 18WF45 | - | - | - | - | - | - | 847A | 857A | 12 | 3/4X3 | |
| 7005 | - | 100 | 50 | 18WF45 | - | - | - | - | - | - | 847A | 843A | 14 | 3/4X3 | X |
| 7006 | - | 100 | 50 | 18WF45 | - | - | - | - | - | - | 844A | 847A | 16 | 3/4X3 | |
| 7007 | - | 100 | 50 | 18WF45 | - | - | - | - | - | - | 843A | 846A | 16 | 3/4X3 | |
| 7008 | - | 100 | 50 | 18WF45 | - | - | - | - | - | - | 849A | 836A | 20 | 3/4X3 | |
| 7009 | - | 100 | 50 | 18WF60 | - | - | - | - | - | - | 851A | 27.0K | 66 | 3/4X3 | |
| 7010 | - | 100 | 50 | 18WF45 | - | - | - | - | - | - | 852A | 849A | 20 | 3/4X3 | |
| 7011 | - | 100 | 50 | 18WF60 | - | - | - | - | - | - | 852A | 836A | 66 | 3/4X3 | |
| 7012 | - | 100 | 50 | 18WF45 | - | - | - | - | - | - | 852A | 853A | 20 | 3/4X3 | |
| 7013 | - | 100 | 50 | 27WF145 | - | - | - | - | - | - | 853A | 836A | 16 | 3/4X3 | |
| 7014 | - | 100 | 50 | 18WF60 | - | - | - | - | - | - | 854A | 838A | 66 | 3/4X3 | |
| 7015 | - | 100 | 50 | 18WF45 | - | - | - | - | - | - | 854A | 853B | 14 | 3/4X3 | |
| 7016 | - | 100 | 50 | 18WF96 | - | - | - | - | - | - | 853B | 853A | 16 | 3/4X3 | |
| 7017 | - | 100 | 50 | 18WF60 | - | - | - | - | - | - | 851A | 33.0K | 66 | 3/4X3 | |
| 7018 | - | 100 | 50 | 18WF96 | - | - | - | - | - | - | 855A | 853B | 14 | 3/4X3 | |
| 7019 | 48X148U | 311 | 50 | - | SEE BEAM TYPE FOR PLATES | | | | - | - | 855A | 886A | 36 | 3/4X3 | |
| 7020 | - | 100 | 50 | 18WF55 | - | - | - | - | - | - | 857B | 856A | 20 | 3/4X3 | |
| 7021 | - | 100 | 50 | 18WF60 | - | - | - | - | - | - | 851B | 30.0K | 66 | 3/4X3 | |
| 7022 | - | 100 | 50 | 18WF55 | - | - | - | - | - | - | 858A | 857B | 20 | 3/4X3 | |
| 7023 | - | 100 | 50 | 18WF85 | - | - | - | - | - | - | 858A | 885A | 92 | 3/4X3 | |
| 7024 | - | 100 | 50 | 18WF45 | - | - | - | - | - | - | 857J | 859A | 24 | 3/4X3 | |
| 7025 | - | 100 | 50 | 18WF85 | - | - | - | - | - | - | 851A | 62.0K | 92 | 3/4X3 | |
| 7026 | - | 100 | 50 | 18WF45 | - | - | - | - | - | - | 852B | 857J | 16 | 3/4X3 | |
| 7027 | - | 100 | 50 | 18WF60 | - | - | - | - | - | - | 852B | 30.0K | 66 | 3/4X3 | |
| 7028 | - | 100 | 50 | 18WF45 | - | - | - | - | - | - | 852B | 857H | 16 | 3/4X3 | |
| 7029 | - | 100 | 50 | 18WF85 | - | - | - | - | - | - | 851C | 884A | 92 | 3/4X3 | |
| 7030 | - | 100 | 50 | 18WF45 | - | - | - | - | - | - | 857H | 859A | 24 | 3/4X3 | |
| 7031 | - | 100 | 50 | 18WF85 | - | - | - | - | - | - | 858A | 885A | 92 | 3/4X3 | |
| 7032 | - | 100 | 50 | 18WF55 | - | - | - | - | - | - | 858A | 857B | 20 | 3/4X3 | |
| 7033 | - | 100 | 50 | 18WF60 | - | - | - | - | - | - | 851B | 30.0K | 66 | 3/4X3 | |

LICENSED PROFESSIONAL ENGINEER — LESLIE E. ROBERTSON — No. 34360 — UNIVERSITY OF THE STATE OF NEW YORK

**SKILLING-HELLE-CHRISTIANSEN-ROBERTSON** — **Civil & Structural Engineers**

PROJECT: THE WORLD TRADE CENTER | TITLE: BEAM SCHEDULE TOWERS A AND B | DATE: 1/22/68

REVISIONS

| PFA NO. | SIZE | TYPE | FY | PLATE 1 SHAPE | PLATE 1 WIDTH | PLATE 1 THICK | PLATE 2 WIDTH | PLATE 2 THICK | DIMENSIONS LENGTH | DIMENSIONS DIM. A | SUPPORTS LEFT | SUPPORTS RIGHT | STUDS NO. | STUDS SIZE | REMARKS |
|---|---|---|---|---|---|---|---|---|---|---|---|---|---|---|---|
| 7034 | - | 100 | 50 | 18WF55 | - | - | - | - | - | - | 857B | 856A | 20 | 3/4X3 | |
| 7035 | 48X14BU | 311 | 50 | - | SEE BEAM TYPE FOR PLATES | | | | - | - | 855A | 886A | 36 | 3/4X3 | |
| 7036 | - | 100 | 50 | 18WF96 | - | - | - | - | - | - | 855A | 853B | 14 | 3/4X3 | |
| 7037 | - | 100 | 50 | 18WF60 | - | - | - | - | - | - | 851A | 33.0K | 66 | 3/4X3 | |
| 7038 | - | 100 | 50 | 18WF45 | - | - | - | - | - | - | 854A | 853B | 14 | 3/4X3 | |
| 7039 | - | 100 | 50 | 18WF96 | - | - | - | - | - | - | 853B | 853A | 16 | 3/4X3 | X |
| 7040 | - | 100 | 50 | 18WF60 | - | - | - | - | - | - | 854A | 838A | 66 | 3/4X3 | |
| 7041 | - | 100 | 50 | 18WF45 | - | - | - | - | - | - | 852A | 853A | 26 | 3/4X3 | |
| 7042 | - | 100 | 50 | 27WF145 | - | - | - | - | - | - | 853A | 836A | 16 | 3/4X3 | |
| 7043 | - | 100 | 50 | 18WF60 | - | - | - | - | - | - | 852A | 836A | 66 | 3/4X3 | |
| 7044 | - | 100 | 50 | 18WF45 | - | - | - | - | - | - | 852A | 849A | 20 | 3/4X3 | |
| 7045 | - | 100 | 50 | 18WF60 | - | - | - | - | - | - | 851A | 27.0K | 66 | 3/4X3 | |
| 7046 | - | 100 | 50 | 18WF45 | - | - | - | - | - | - | 849A | 836A | 20 | 3/4X3 | |
| 7047 | - | 100 | 50 | 18WF45 | - | - | - | - | - | - | 847A | 857A | 12 | 3/4X3 | |
| 7048 | - | 100 | 50 | 18WF60 | - | - | - | - | - | - | 848A | 846A | 66 | 3/4X3 | |
| 7049 | - | 100 | 50 | 18WF45 | - | - | - | - | - | - | 844A | 847A | 16 | 3/4X3 | |
| 7050 | - | 100 | 50 | 18WF45 | - | - | - | - | - | - | 848A | 844A | 16 | 3/4X3 | |
| 7051 | - | 100 | 50 | 18WF45 | - | - | - | - | - | - | 850A | 845A | 6 | 3/4X3 | |
| 7052 | - | 100 | 50 | 18WF45 | - | - | - | - | - | - | 847A | 843A | 14 | 3/4X3 | |
| 7053 | - | 100 | 50 | 18WF45 | - | - | - | - | - | - | 843A | 846A | 16 | 3/4X3 | |
| 7054 | 48X14BU | 310 | 50 | - | SEE BEAM TYPE FOR PLATES | | | | - | - | 842A | 856A | 64 | 3/4X3 | |
| 7055 | - | 100 | 50 | 18WF105 | - | - | - | - | - | - | 856A | 859A | 18 | 3/4X3 | |
| 7056 | - | 436 | 50 | 18WF96 | - | - | - | - | - | - | 859A | 860A | 16 | 3/4X3 | |
| 7057 | - | 100 | 50 | 18WF105 | - | - | - | - | - | - | 860A | 860C | 18 | 3/4X3 | |
| 7058 | - | 100 | 50 | 18WF96 | - | - | - | - | - | - | 860C | 859A | 14 | 3/4X3 | |
| 7059 | - | 100 | 50 | 18WF105 | - | - | - | - | - | - | 859A | 856A | 18 | 3/4X3 | |
| 7060 | 48X14BU | 310 | 50 | - | SEE BEAM TYPE FOR PLATES | | | | - | - | 856A | 842A | 64 | 3/4X3 | |
| 7061 | - | 100 | 50 | 16WF36 | - | - | - | - | - | - | 838A | 837A | 14 | 3/4X3 | |
| 7062 | - | 100 | 50 | 16WF45 | - | - | - | - | - | - | 842A | 835A | 28 | 3/4X3 | |
| 7063 | - | 100 | 50 | 5WF16 | - | - | - | - | - | - | | | - | - | 2 |
| 7064 | 32X14BU | 307 | 50 | - | 14 | 1 | | 5/8 | - | - | 835A | 841B | 28 | 3/4X3 | 1 |
| 7065 | - | 100 | 50 | 5WF16 | - | - | - | - | - | - | | | - | - | 2 |
| 7066 | - | 100 | 50 | 16WF45 | - | - | - | - | - | - | 841B | 834A | 24 | 3/4X3 | |

REMARKS

1 SEE BEAM TYPE FOR LENGTH OF PLATE 2

2 SEE 6-AB5-86 FOR SUPPORT DETAILS

LICENSED PROFESSIONAL ENGINEER — LESLIE E. ROBERTSON — No. 34360 — STATE OF NEW YORK

**SKILLING-HELLE-CHRISTIANSEN-ROBERTSON** — **Civil & Structural Engineers**

PROJECT: THE WORLD TRADE CENTER | TITLE: BEAM SCHEDULE TOWERS A AND B | DATE: 1/22/68

REVISIONS

| LAT. NO. | SIZE | TYPE | FY | SHAPE | PLATE 1 WIDTH | PLATE 1 THICK | PLATE 2 WIDTH | PLATE 2 THICK | DIMENSIONS LENGTH | DIMENSIONS DIM. A | SUPPORTS LEFT | SUPPORTS RIGHT | STUDS NO. | STUDS SIZE | REMARKS |
|---|---|---|---|---|---|---|---|---|---|---|---|---|---|---|---|
| 7067 | - | 422 | 50 | 30WF132 | 10-1/2 | 1 | - | - | | | 834A | 840D | 22 | 3/4X3 | 1 |
| 7068 | - | 100 | 50 | 12B16.5 | - | - | - | - | - | - | | | - | - | 2 |
| 7069 | - | 100 | 50 | 16WF45 | - | - | - | - | - | - | 840D | 832B | 24 | 3/4X3 | |
| 7070 | - | 422 | 50 | 30WF108 | 10-1/2 | 3/4 | - | - | | | 832B | 840C | 22 | 3/4X3 | 1 |
| 7071 | - | 100 | 50 | 12B16.5 | - | - | - | - | - | - | | | - | - | 2 |
| 7072 | - | 100 | 50 | 16WF40 | - | - | - | - | - | - | 840C | 833A | 24 | 3/4X3 | X |
| 7073 | - | 422 | 50 | 27WF94 | 10-1/2 | 3/4 | - | - | | | 833A | 840A | 22 | 3/4X3 | 1 |
| 7074 | - | 100 | 50 | 10B15 | - | - | - | - | - | - | | | - | - | 2 |
| 7075 | - | 100 | 50 | 16WF40 | - | - | - | - | - | - | 840A | 832A | 24 | 3/4X3 | |
| 7076 | - | 422 | 50 | 27WF94 | 10-1/2 | 3/4 | - | - | | | 832A | 840A | 22 | 3/4X3 | 1 |
| 7077 | - | 100 | 50 | 10B15 | - | - | - | - | - | - | | | - | - | 2 |
| 7078 | - | 100 | 50 | 10B15 | - | - | - | - | - | - | | | - | - | |
| 7079 | - | 100 | 50 | 16WF40 | - | - | - | - | - | - | 840A | 831A | 24 | 3/4X3 | |
| 7080 | - | 422 | 50 | 27WF94 | 10-1/2 | 3/4 | - | - | | | 831A | 840B | 20 | 3/4X3 | 1 |
| 7081 | - | 100 | 50 | 16WF40 | - | - | - | - | - | - | 840A | 830A | 24 | 3/4X3 | |
| 7082 | - | 422 | 50 | 27WF94 | 10-1/2 | 3/4 | - | - | | | 830A | 839A | 20 | 3/4X3 | 1 |
| 7083 | - | 100 | 50 | 16WF40 | - | - | - | - | - | - | 830A | 840A | 24 | 3/4X3 | |
| 7084 | - | 422 | 50 | 27WF94 | 10-1/2 | 3/4 | - | - | | | 831A | 840A | 20 | 3/4X3 | 1 |
| 7085 | - | 100 | 50 | 16WF40 | - | - | - | - | - | - | 831A | 840A | 24 | 3/4X3 | |
| 7086 | - | 422 | 50 | 27WF94 | 10-1/2 | 3/4 | - | - | | | 832A | 840A | 22 | 3/4X3 | 1 |
| 7087 | - | 100 | 50 | 16WF40 | - | - | - | - | - | - | 832A | 840A | 24 | 3/4X3 | |
| 7088 | - | 424 | 50 | 27WF94 | - | - | - | - | - | - | 833B | 840A | 22 | 3/4X3 | |
| 7089 | - | 100 | 50 | 16WF40 | - | - | - | - | - | - | 833B | 840B | 24 | 3/4X3 | |
| 7090 | - | 424 | 50 | 27WF102 | - | - | - | - | - | - | 832C | 840B | 22 | 3/4X3 | |
| 7091 | - | 100 | 50 | 16WF45 | - | - | - | - | - | - | 832C | 840D | 24 | 3/4X3 | |
| 7092 | - | 100 | 50 | 12B16.5 | - | - | - | - | - | - | | | - | - | 2 |
| 7093 | - | 423 | 50 | 30WF116 | 10-1/2 | 7/8 | - | - | | | 834B | 840D | 22 | 3/4X3 | 1 |
| 7094 | - | 100 | 50 | 16WF45 | - | - | - | - | - | - | 834B | 841A | 24 | 3/4X3 | |
| 7095 | - | 100 | 50 | 12B16.5 | - | - | - | - | - | - | | | - | - | 2 |
| 7096 | - | 423 | 50 | 30WF172 | 15 | 1 | - | - | | | 835B | 841A | 28 | 3/4X3 | 1 |
| 7097 | - | 100 | 50 | 12B16.5 | - | - | - | - | - | - | | | - | - | 2 |
| 7098 | - | 100 | 50 | 16WF45 | - | - | - | - | - | - | 835B | 842B | 28 | 3/4X3 | |
| 7099 | 42X148U | 312 | 50 | - | SEE BEAM TYPE FOR PLATES | | | | - | - | 873A | 842B | 64 | 3/4X3 | |

REMARKS

1 SEE BEAM TYPE FOR LENGTH OF PLATE 1
2 SEE 6-AB5-86 FOR SUPPORT DETAILS

LICENSED PROFESSIONAL ENGINEER — LESLIE E. ROBERTSON — No. 34360 — STATE OF NEW YORK

**SKILLING-HELLE-CHRISTIANSEN-ROBERTSON** — **Civil & Structural Engineers**

| PROJECT | TITLE | DATE |
|---|---|---|
| THE WORLD TRADE CENTER | BEAM SCHEDULE TOWERS A AND B | 1/27/69 |

REVISIONS

| BEAM NO. | SIZE | TYPE | FY | PLATE 1 SHAPE | PLATE 1 WIDTH | PLATE 1 THICK | PLATE 2 WIDTH | PLATE 2 THICK | DIMENSIONS LENGTH | DIMENSIONS Dim. A | SUPPORTS LEFT | SUPPORTS RIGHT | STUDS NO. | STUDS SIZE | STUDS REMARKS |
|---|---|---|---|---|---|---|---|---|---|---|---|---|---|---|---|
| 7100 | - | 100 | 50 | 30WF116 | - | - | - | - | - | - | 836A | 834A | 24 | 3/4X3 | |
| 7101 | - | 100 | 50 | 30WF116 | - | - | - | - | - | - | 834A | 833A | 20 | 3/4X3 | |
| 7102 | - | 100 | 50 | 30WF116 | - | - | - | - | - | - | 833A | 831A | 20 | 3/4X3 | |
| 7103 | - | 100 | 50 | 30WF116 | - | - | - | - | - | - | 831A | 831A | 20 | 3/4X3 | |
| 7104 | - | 100 | 50 | 30WF116 | - | - | - | - | - | - | 831A | 833A | 20 | 3/4X3 | |
| 7105 | - | 100 | 50 | 30WF116 | - | - | - | - | - | - | 833B | 834B | 20 | 3/4X3 | X |
| 7106 | - | 100 | 50 | 30WF116 | - | - | - | - | - | - | 834B | 862A | 24 | 3/4X3 | |
| 7107 | - | 100 | 50 | 16WF36 | - | - | - | - | - | - | 837A | 864A | 14 | 3/4X3 | |
| 7108 | - | 100 | 50 | 18WF45 | - | - | - | - | - | - | 846B | 843A | 16 | 3/4X3 | |
| 7109 | - | 100 | 50 | 18WF45 | - | - | - | - | - | - | 843A | 847A | 14 | 3/4X3 | |
| 7110 | - | 100 | 50 | 18WF45 | - | - | - | - | - | - | 847A | 844A | 16 | 3/4X3 | |
| 7111 | - | 100 | 50 | 18WF45 | - | - | - | - | - | - | 844A | 846A | 16 | 3/4X3 | |
| 7112 | - | 100 | 50 | 16WF36 | - | - | - | - | - | - | 837A | 838A | 14 | 3/4X3 | |
| 7113 | - | 100 | 50 | 18WF45 | - | - | - | - | - | - | 845A | 850A | 6 | 3/4X3 | |
| 7114 | - | 100 | 50 | 18WF45 | - | - | - | - | - | - | 847A | 847A | 12 | 3/4X3 | |
| 7115 | - | 100 | 50 | 18WF45 | - | - | - | - | - | - | 862A | 849A | 20 | 3/4X3 | |
| 7116 | - | 100 | 50 | 18WF60 | - | - | - | - | - | - | 27.0K | 851A | 66 | 3/4X3 | |
| 7117 | - | 100 | 50 | 18WF45 | - | - | - | - | - | - | 849A | 861A | 20 | 3/4X3 | |
| 7118 | - | 100 | 50 | 27WF94 | - | - | - | - | - | - | 862A | 861A | 102 | 3/4X3 | |
| 7119 | - | 100 | 50 | 18WF96 | - | - | - | - | - | - | 862A | 863A | 24 | 3/4X3 | |
| 7120 | 42X14BU | 313 | 50 | - | SEE BEAM TYPE FOR PLATES | | | | - | - | 879A | 861A | 46 | 3/4X3 | |
| 7121 | - | 100 | 50 | 18WF45 | - | - | - | - | - | - | 864A | 863A | 20 | 3/4X3 | |
| 7122 | - | 100 | 50 | 18WF45 | - | - | - | - | - | - | 863A | 851F | 14 | 3/4X3 | |
| 7123 | - | 100 | 50 | 18WF96 | - | - | - | - | - | - | 863A | 867A | 16 | 3/4X3 | |
| 7124 | - | 100 | 50 | 18WF45 | - | - | - | - | - | - | 866A | 863A | 12 | 3/4X3 | |
| 7125 | - | 100 | 50 | 18WF45 | - | - | - | - | - | - | 864A | 865A | 14 | 3/4X3 | |
| 7126 | - | 100 | 50 | 24WF120 | - | - | - | - | - | - | 865A | 867A | 130 | 3/4X3 | |
| 7127 | - | 100 | 50 | 24WF68 | - | - | - | - | - | - | 873A | 874A | 6 | 3/4X3 | |
| 7128 | - | 100 | 50 | 24WF68 | - | - | - | - | - | - | 879A | 874A | 8 | 3/4X3 | |
| 7129 | - | 100 | 50 | 24WF68 | - | - | - | - | - | - | 879A | 874A | 8 | 3/4X3 | |
| 7130 | - | 100 | 50 | 24WF68 | - | - | - | - | - | - | 879A | 875A | 10 | 3/4X3 | |
| 7131 | - | 100 | 50 | 24WF68 | - | - | - | - | - | - | 880A | 875A | 8 | 3/4X3 | |
| 7132 | - | 100 | 50 | 24WF68 | - | - | - | - | - | - | 880A | 876A | 8 | 3/4X3 | |
| 7133 | - | 100 | 50 | 24WF68 | - | - | - | - | - | - | 881A | 876A | 8 | 3/4X3 | |

LICENSED PROFESSIONAL ENGINEER
LESLIE E. ROBERTSON
No. 34364
UNIVERSITY OF THE STATE OF NEW YORK

**SKILLING-HELLE-CHRISTIANSEN-ROBERTSON** — **Civil & Structural Engineers**

PROJECT: THE WORLD TRADE CENTER | TITLE: BEAM SCHEDULE TOWERS A AND B | DATE: 1/22/68

REVISIONS

| BEAM NO. | SIZE | TYPE | FY | SHAPE | PLATE 1 WIDTH | PLATE 1 THICK | PLATE 2 WIDTH | PLATE 2 THICK | DIMENSIONS LENGTH | DIMENSIONS DIM. A | SUPPORTS LEFT | SUPPORTS RIGHT | STUDS NO. | STUDS SIZE | REMARKS |
|---|---|---|---|---|---|---|---|---|---|---|---|---|---|---|---|
| 7134 | - | 100 | 50 | 24WF68 | - | - | - | - | - | - | 881A | 877A | 12 | 3/4X3 | |
| 7135 | - | 100 | 50 | 24WF68 | - | - | - | - | - | - | 882 | 875 | - | - | |
| 7136 | - | 100 | 50 | 24WF68 | - | - | - | - | - | - | 882A | 877A | 8 | 3/4X3 | |
| 7137 | - | 100 | 50 | 24WF84 | - | - | - | - | - | - | 882A | 878A | 6 | 3/4X3 | |
| 7138 | - | 100 | 50 | 24WF76 | - | - | - | - | - | - | 878A | 877A | 8 | 3/4X3 | |
| 7139 | - | 100 | 50 | 24WF110 | - | - | - | - | - | - | 79.5K | 865A | 120 | 3/4X3 | X |
| 7140 | - | 100 | 50 | 24WF110 | - | - | - | - | - | - | 869A | 866A | 120 | 3/4X3 | |
| 7141 | - | 100 | 50 | 18WF60 | - | - | - | - | - | - | 846B | 848A | 66 | 3/4X3 | |
| 7142 | - | 100 | 50 | 18WF55 | - | - | - | - | - | - | 857G | 867A | 12 | 3/4X3 | |
| 7143 | - | 100 | 50 | 18WF45 | - | - | - | - | - | - | 27.0K | 851E | 50 | 3/4X3 | |
| 7144 | - | 100 | 50 | 18WF55 | - | - | - | - | - | - | 868A | 857G | 14 | 3/4X3 | |
| 7145 | - | 100 | 50 | 18WF45 | - | - | - | - | - | - | 868A | 851F | 50 | 3/4X3 | |
| 7146 | - | 100 | 50 | 18WF45 | - | - | - | - | - | - | 868A | 852C | 20 | 3/4X3 | |
| 7147 | - | 100 | 50 | 18WF45 | - | - | - | - | - | - | 27.0K | 852C | 50 | 3/4X3 | |
| 7148 | - | 100 | 50 | 18WF45 | - | - | - | - | - | - | 869A | 852C | 20 | 3/4X3 | |
| 7149 | - | 100 | 50 | 24WF110 | - | - | - | - | - | - | 108.0K | 870A | 120 | 3/4X3 | |
| 7150 | - | 100 | 50 | 18WF45 | - | - | - | - | - | - | 857E | 869A | 12 | 3/4X3 | |
| 7151 | - | 100 | 50 | 18WF45 | - | - | - | - | - | - | 878A | 857D | 14 | 3/4X3 | |
| 7152 | - | 100 | 50 | 18WF45 | - | - | - | - | - | - | 857F | 870A | 14 | 3/4X3 | |
| 7153 | - | 100 | 50 | 18WF60 | - | - | - | - | - | - | 30.0K | 851B | 66 | 3/4X3 | |
| 7154 | - | 100 | 50 | 18WF105 | - | - | - | - | - | - | 860B | 878A | 18 | 3/4X3 | |
| 7155 | - | 100 | 50 | 18WF45 | - | - | - | - | - | - | 857D | 871A | 12 | 3/4X3 | |
| 7156 | - | 100 | 50 | 18WF45 | - | - | - | - | - | - | 871A | 857E | 10 | 3/4X3 | |
| 7157 | - | 100 | 50 | 18WF45 | - | - | - | - | - | - | 871A | 857F | 14 | 3/4X3 | |
| 7158 | - | 100 | 50 | 18WF85 | - | - | - | - | - | - | 884A | 851D | 92 | 3/4X3 | |
| 7159 | - | 100 | 50 | 18WF45 | - | - | - | - | - | - | 859B | 871A | 22 | 3/4X3 | |
| 7160 | - | 100 | 50 | 18WF45 | - | - | - | - | - | - | 871A | 872A | 22 | 3/4X3 | |
| 7161 | - | 437 | 50 | 18WF96 | - | - | - | - | - | - | 859B | 860B | 16 | 3/4X3 | |
| *7162 | - | 100 | 50 | 18WF85 | - | - | - | - | - | - | 885A | 872A | 92 | 3/4X3 | |
| 7163 | - | 100 | 50 | 18WF55 | - | - | - | - | - | - | 857C | 872A | 20 | 3/4X3 | |
| 7164 | - | 100 | 50 | 18WF114 | - | - | - | - | - | - | 856A | 859B | 18 | 3/4X3 | |
| 7165 | - | 100 | 50 | 18WF60 | - | - | - | - | - | - | 30.0K | 851B | 66 | 3/4X3 | |
| 7166 | - | 100 | 50 | 18WF55 | - | - | - | - | - | - | 856A | 857C | 20 | 3/4X3 | |

LICENSED PROFESSIONAL ENGINEER — LESLIE E. ROBERTSON — No. 34360 — STATE OF NEW YORK

**SKILLING-HELLE-CHRISTIANSEN-ROBERTSON** — **Civil & Structural Engineers**

| PROJECT | TITLE | DATE |
|---|---|---|
| THE WORLD TRADE CENTER | BEAM SCHEDULE TOWERS A AND B | 1/22/68 |

REVISIONS

| BEAM NO. | SIZE | TYPE | FY | SHAPE | PLATE 1 WIDTH | PLATE 1 THICK | PLATE 2 WIDTH | PLATE 2 THICK | DIMENSIONS LENGTH | DIMENSIONS DIM. A | SUPPORTS LEFT | SUPPORTS RIGHT | STUDS NO. | STUDS SIZE | REMARKS |
|---|---|---|---|---|---|---|---|---|---|---|---|---|---|---|---|
| 7167 | 48X145D | 311 | 50 | - | SEE BEAM TYPE FOR PLATES | | | | - | - | 856A | 855B | 36 | 3/4X3 | |
| 7168 | - | 100 | 50 | 18WF94 | - | - | - | - | - | - | 853B | 855A | 14 | 3/4X3 | |
| 7169 | - | 100 | 50 | 18WF60 | - | - | - | - | - | - | 33.0K | 851A | 66 | 3/4X3 | |
| 7170 | - | 100 | 50 | 18WF94 | - | - | - | - | - | - | 853A | 853B | 14 | 3/4X3 | |
| 7171 | - | 100 | 50 | 18WF45 | - | - | - | - | - | - | 853B | 854A | 14 | 3/4X3 | |
| 7172 | - | 100 | 50 | 18WF60 | - | - | - | - | - | - | 838A | 854A | 66 | 3/4X3 | X |
| 7173 | - | 100 | 50 | 27WF145 | - | - | - | - | - | - | 836A | 853A | 16 | 3/4X3 | |
| 7174 | - | 100 | 50 | 18WF45 | - | - | - | - | - | - | 853A | 852A | 26 | 3/4X3 | |
| 7175 | - | 100 | 50 | 18WF60 | - | - | - | - | - | - | 836A | 852A | 66 | 3/4X3 | |
| 7176 | - | 100 | 50 | 18WF45 | - | - | - | - | - | - | 849A | 852A | 20 | 3/4X3 | |
| 7177 | - | 100 | 50 | 18WF60 | - | - | - | - | - | - | 27.0K | 851A | 66 | 3/4X3 | |
| 7178 | - | 100 | 50 | 18WF45 | - | - | - | - | - | - | 849A | 848A | 20 | 3/4X3 | |
| 7179 | - | 100 | 50 | 18WF45 | - | - | - | - | - | - | 857A | 847A | 12 | 3/4X3 | |
| 7180 | 48X145D | 310 | 50 | - | SEE BEAM TYPE FOR PLATES | | | | - | - | 842A | 846A | 44 | 3/4X3 | |
| 7181 | - | 100 | 50 | 18WF45 | - | - | - | - | - | - | 847A | 844A | 16 | 3/4X3 | |
| 7182 | - | 100 | 50 | 18WF60 | - | - | - | - | - | - | 846A | 848A | 56 | 3/4X3 | |
| 7183 | - | 100 | 50 | 18WF45 | - | - | - | - | - | - | 846A | 843A | 16 | 3/4X3 | |
| 7184 | - | 100 | 50 | 18WF45 | - | - | - | - | - | - | 843A | 847A | 14 | 3/4X3 | |
| 7185 | - | 100 | 50 | 18WF45 | - | - | - | - | - | - | 844A | 848A | 16 | 3/4X3 | |
| 7186 | - | 100 | 50 | 30WF116 | - | - | - | - | - | - | 834A | 850A | 24 | 3/4X3 | |
| 7187 | - | 100 | 50 | 16WF45 | - | - | - | - | - | - | 835A | 842A | 28 | 3/4X3 | |
| 7188 | 32X148C | 307 | 50 | - | 14 | 1 | | 5/8 | - | - | 841B | 835A | 28 | 3/4X3 | 1 |
| 7189 | - | 100 | 50 | 16WF45 | - | - | - | - | - | - | 834A | 841B | 24 | 3/4X3 | |
| 7190 | - | 422 | 50 | 30WF132 | 10-1/2 | 1 | - | - | | | 840D | 834A | 22 | 3/4X3 | 2 |
| 7191 | - | 100 | 50 | 16WF45 | - | - | - | - | - | - | 832B | 840D | 24 | 3/4X3 | |
| 7192 | - | 422 | 50 | 30WF108 | 10-1/2 | 3/4 | - | - | | | 840C | 832B | 22 | 3/4X3 | 2 |
| 7193 | - | 100 | 50 | 30WF116 | - | - | - | - | - | - | 833A | 834A | 20 | 3/4X3 | |
| 7194 | - | 100 | 50 | 16WF40 | - | - | - | - | - | - | 833A | 840C | 24 | 3/4X3 | |
| 7195 | - | 422 | 50 | 27WF94 | 10-1/2 | 3/4 | - | - | | | 840A | 833A | 22 | 3/4X3 | 2 |
| 7196 | - | 100 | 50 | 16WF40 | - | - | - | - | - | - | 832A | 840A | 24 | 3/4X3 | |
| 7197 | - | 100 | 50 | 30WF116 | - | - | - | - | - | - | 831A | 833A | 20 | 3/4X3 | |
| 7198 | - | 422 | 50 | 27WF94 | 10-1/2 | 3/4 | - | - | | | 840A | 832A | 22 | 3/4X3 | 2 |
| 7199 | - | 100 | 50 | 16WF40 | - | - | - | - | - | - | 831A | 840A | 24 | 3/4X3 | |

REMARKS

1 SEE BEAM TYPE FOR LENGTH OF PLATE 2
2 SEE BEAM TYPE FOR LENGTH OF PLATE 1

LICENSED PROFESSIONAL ENGINEER LESLIE E. ROBERTSON No. 34360 UNIVERSITY OF THE STATE OF NEW YORK

**SKILLING-HELLE-CHRISTIANSEN-ROBERTSON** — **Civil & Structural Engineers**

PROJECT: THE WORLD TRADE CENTER | TITLE: BEAM SCHEDULE TOWERS A AND B | DATE: 1/22/68

REVISIONS

| BEAM NO. | SIZE | TYPE | FY | PLATE 1 SHAPE | PLATE 1 WIDTH | PLATE 1 THICK | PLATE 2 WIDTH | PLATE 2 THICK | DIMENSIONS LENGTH | DIMENSIONS DIM. A | SUPPORTS LEFT | SUPPORTS RIGHT | STUDS NO. | STUDS SIZE | REMARKS |
|---|---|---|---|---|---|---|---|---|---|---|---|---|---|---|---|
| 7200 | - | 422 | 50 | 27WF94 | 10-1/2 | 3/4 | - | - | | | 840A | 831A | 20 | 3/4X3 | 1 |
| 7201 | - | 100 | 50 | 30WF116 | - | - | - | - | - | - | 831A | 831A | 20 | 3/4X3 | |
| 7202 | - | 100 | 50 | 16WF40 | - | - | - | - | - | - | 830A | 840A | 24 | 3/4X3 | |
| 7203 | - | 422 | 50 | 27WF94 | 10-1/2 | 3/4 | - | - | | | 839A | 830A | 20 | 3/4X3 | |
| 7204 | - | 100 | 50 | 16WF40 | - | - | - | - | - | - | 840A | 830A | 24 | 3/4X3 | |
| 7205 | - | 100 | 50 | 16WF40 | - | - | - | - | - | - | 840A | 831A | 24 | 3/4X3 | X |
| 7206 | - | 422 | 50 | 27WF94 | 10-1/2 | 3/4 | - | - | | | 840A | 831A | 20 | 3/4X3 | 1 |
| 7207 | - | 100 | 50 | 30WF116 | - | - | - | - | - | - | 833B | 831A | 20 | 3/4X3 | |
| 7208 | - | 422 | 50 | 27WF94 | 10-1/2 | 3/4 | - | - | | | 840A | 832A | 22 | 3/4X3 | 1 |
| 7209 | - | 100 | 50 | 16WF40 | - | - | - | - | - | - | 840A | 832A | 24 | 3/4X3 | |
| 7210 | - | 424 | 50 | 27WF94 | - | - | - | - | - | - | 840A | 833B | 22 | 3/4X3 | |
| 7211 | - | 100 | 50 | 16WF40 | - | - | - | - | - | - | 840A | 833B | 24 | 3/4X3 | |
| 7212 | - | 100 | 50 | 30WF116 | - | - | - | - | - | - | 834B | 833B | 20 | 3/4X3 | |
| 7213 | - | 424 | 50 | 27WF102 | - | - | - | - | - | - | 840B | 832C | 22 | 3/4X3 | |
| 7214 | - | 100 | 50 | 16WF45 | - | - | - | - | - | - | 840D | 832C | 24 | 3/4X3 | |
| 7215 | - | 423 | 50 | 30WF116 | 10-1/2 | 7/8 | - | - | | | 840D | 834B | 22 | 3/4X3 | 1 |
| 7216 | - | 100 | 50 | 16WF45 | - | - | - | - | - | - | 841A | 834B | 24 | 3/4X3 | |
| 7217 | - | 423 | 50 | 30WF172 | 15 | 1 | - | - | | | 841A | 835B | 28 | 3/4X3 | 1 |
| 7218 | - | 100 | 50 | 16WF45 | - | - | - | - | - | - | 842A | 835B | 28 | 3/4X3 | |
| 7219 | - | 100 | 50 | 30WF116 | - | - | - | - | - | - | 836A | 834B | 24 | 3/4X3 | |
| 7220 | - | 100 | 50 | 16WF36 | - | - | - | - | - | - | 838A | 837A | 14 | 3/4X3 | |
| 7221 | - | 100 | 50 | 12B16.5 | - | - | - | - | - | - | | | - | - | 2 |
| 7222 | - | 100 | 50 | 12B16.5 | - | - | - | - | - | - | | | - | - | 2 |
| 7223 | - | 100 | 50 | 12B16.5 | - | - | - | - | - | - | | | - | - | 2 |
| 7224 | - | 100 | 50 | 10B15 | - | - | - | - | - | - | | | - | - | 2 |
| 7225 | - | 100 | 50 | 10B15 | - | - | - | - | - | - | | | - | - | 2 |
| 7226 | - | 100 | 50 | 10B15 | - | - | - | - | - | - | | | - | - | 2 |
| 7227 | - | 100 | 50 | 12B16.5 | - | - | - | - | - | - | | | - | - | 2 |
| 7228 | - | 100 | 50 | 12B16.5 | - | - | - | - | - | - | | | - | - | 2 |
| 7229 | - | 100 | 50 | 5WF16 | - | - | - | - | - | - | | | - | - | 2 |
| 7230 | - | 100 | 50 | 5WF16 | - | - | - | - | - | - | | | - | - | 2 |
| 7231 | - | 100 | 50 | 18WF45 | - | - | - | - | - | - | 836A | 849A | 20 | 3/4X3 | |
| 7232 | - | 100 | 50 | 18WF45 | - | - | - | - | - | - | 836A | 857A | 12 | 3/4X3 | |
| 7233 | - | 100 | 50 | 18WF45 | - | - | - | - | - | - | 848A | 849A | 20 | 3/4X3 | |

REMARKS

1 SEE BEAM TYPE FOR LENGTH OF PLATE 1
2 SEE 6-A85-86 FOR SUPPORT DETAILS

LICENSED PROFESSIONAL ENGINEER LESLIE E. ROBERTSON No. 34360 STATE OF NEW YORK

5-A81-217

**SKILLING, HELLE, CHRISTIANSEN, ROBERTSON** — Structural & Civil Engineers

PROJECT: THE WORLD TRADE CENTER | TITLE: BEAM SCHEDULE TOWERS A AND B | DATE: 12/ 6/68

REVISIONS

| BEAM NO. | SIZE | TYPE | FY | SHAPE | PLATE 1 WIDTH | PLATE 1 THICK | PLATE 2 WIDTH | PLATE 2 THICK | DIMENSIONS LENGTH | DIMENSIONS DIM. A | SUPPORTS LEFT | SUPPORTS RIGHT | STUDS NO. | STUDS SIZE | REMARKS |
|---|---|---|---|---|---|---|---|---|---|---|---|---|---|---|---|
| 7234 | - | 100 | 50 | 18WF45 | - | - | - | - | - | - | 857A | 836A | 12 | 3/4X3 | |
| 7235 | - | 100 | 50 | 18WF45 | - | - | - | - | - | - | 857A | 836A | 12 | 3/4X3 | |
| 7236 | - | 100 | 50 | 18WF45 | - | - | - | - | - | - | 848A | 849A | 20 | 3/4X3 | |
| 7237 | - | 100 | 50 | 18WF45 | - | - | - | - | - | - | 849A | 848A | 20 | 3/4X3 | |
| 7238 | - | 100 | 50 | 16WF45 | - | - | - | - | - | - | 862A | 857A | 12 | 3/4X3 | |
| 7239 | - | 100 | 36 | 9CH13.4 | - | - | - | - | - | - | 363A | 17.4K | - | - | X |
| 7240 | - | 100 | 36 | 16WF36 | - | - | - | - | - | - | 739 | 739 | 48 | 3/4X3 | 1 |
| 7241 | - | 700 | 36 | 12WF27 | 8-1/2 | 1/2 | - | - | SEE SUPT. | DET. | 739 | 739 | 36 | 3/4X3 | |
| 7242 | - | 100 | 36 | 12WF27 | - | - | - | - | - | - | 287D | 26.5K | 16 | 3/4X3 | |
| 7243 | - | 100 | 36 | 12WF27 | - | - | - | - | - | - | 348C | 364H | - | - | |
| 7244 | - | 100 | 36 | 12B22 | - | - | - | - | - | - | 26.5K | 26.5K | 20 | 3/4X3 | |
| 7245 | - | 100 | 36 | 15CH33.9 | - | - | - | - | - | - | 357K | 26.5K | 20 | 3/4X3 | |
| 7246 | 16X5-1/2BX | 201 | 36 | - | 4 | 3/8 | 16 | 3/4 | - | - | 254E | 206B | - | - | |
| 7247 | - | 100 | 36 | 36WF160 | - | - | - | - | - | - | 209B | 260E | - | - | |
| 7248 | - | 100 | 36 | 27WF84 | - | - | - | - | - | - | 198.0K | 198.0K | - | - | |
| 7249 | - | 100 | 36 | 24WF68 | - | - | - | - | - | - | 165.0K | 165.0K | - | - | |
| 7250 | - | 100 | 36 | 24WF84 | - | - | - | - | - | - | 165.0K | 165.0K | - | - | 2 |
| 7251 | - | 100 | 36 | 10B15 | - | - | - | - | - | - | 17.4K | 17.4K | - | - | 3 |
| 7252 | - | 100 | 36 | 10CH15.3 | - | - | - | - | - | - | 22.8K | 22.8K | - | - | 3 |
| 7253 | - | 100 | 36 | 12B22 | - | - | - | - | - | - | 26.5K | 26.5K | - | - | 3 |
| 7254 | - | 100 | 36 | 8CH11.5 | - | - | - | - | - | - | 11.8K | 11.8K | - | - | 3 |
| 7255 | - | 100 | 36 | 8B13 | - | - | - | - | - | - | 17.4K | 17.4K | - | - | 3 |
| 7256 | - | 100 | 36 | 14WF30 | - | - | - | - | - | - | 38.0K | 38.0K | - | - | 3 |
| 7257 | - | 100 | 36 | 14WF30 | - | - | - | - | - | - | 38.0K | 38.0K | - | - | 3 |
| 7258 | - | 100 | 50 | 12WF40 | - | - | - | - | - | - | 101B | 54.1K | - | - | |
| 7259 | - | 100 | 36 | 18WF45 | - | - | - | - | - | - | 472J | 472A | - | - | |
| 7260 | - | 100 | 36 | 10WF29 | - | - | - | - | - | - | 364F | 220I | - | - | |
| 7261 | - | 100 | 36 | 18WF45 | - | - | - | - | - | - | 472A | 452C | - | - | |
| 7262 | - | 466 | 50 | 12WF58 | - | - | - | - | - | - | 47.1K | 54.1K | - | - | |
| 7263 | - | 100 | 36 | 8B13 | - | - | - | - | - | - | 17.4K | 510C | - | - | |
| 7264 | - | 468 | 50 | 14B22 | - | - | - | - | - | - | 36.1K | 26.5K | 10 | 3/4X3 | |
| 7265 | - | 100 | 36 | 12WF36 | - | - | - | - | - | - | 272B | 26.5K | - | - | |

REMARKS

2 ONE SIDED ANGLE CONN. BOTH ENDS.
3 FIELD WELD CONN. BOTH ENDS.

LICENSED PROFESSIONAL ENGINEER — LESLIE E. ROBERTSON — No. 34360 — UNIVERSITY OF THE STATE OF NEW YORK

5-AB1-218

**SKILLING-HELLE-CHRISTIANSEN-ROBERTSON** — **Civil & Structural Engineers**

PROJECT: THE WORLD TRADE CENTER | TITLE: BEAM SCHEDULE TOWERS A AND B | DATE: 7/17/68

REVISIONS

| BEAM NO. | SIZE | TYPE | FY | PLATE 1 SHAPE | PLATE 1 WIDTH | PLATE 1 THICK | PLATE 2 WIDTH | PLATE 2 THICK | DIMENSIONS LENGTH | DIMENSIONS DIM. A | SUPPORTS LEFT | SUPPORTS RIGHT | STUDS NO. | STUDS SIZE | REMARKS |
|---|---|---|---|---|---|---|---|---|---|---|---|---|---|---|---|
| 7267 | - | 470 | 50 | 12WF85 | - | - | - | - | - | - | 70.7K | 101B | - | - | |
| 7268 | - | 415 | 50 | 12WF85 | - | - | - | - | - | 18FT 4 | 70.7K | 70.7K | - | - | |
| 7269 | - | 416 | 50 | 12WF65 | - | - | - | - | - | 24FT 0 | 54.1K | 54.1K | - | - | |
| 7270 | - | 416 | 50 | 12WF65 | - | - | - | - | - | 22FT 7 | 101B | 54.1K | - | - | |
| 7271 | - | 416 | 50 | 12WF65 | - | - | - | - | - | 20FT 10 | 54.1K | 54.1K | - | - | |
| 7278 | 8X4B | 402 | 36 | 8813 | 3 | 1/4 | - | - | FULL LENGTH | | 17.4K | 17.4K | - | - | |

5-AB1-210

**SKILLING-HELLE-CHRISTIANSEN-ROBERTSON** — **Civil & Structural Engineers**

PROJECT: THE WORLD TRADE CENTER | TITLE: BEAM SCHEDULE TOWERS A AND B | DATE: 9/18/68

REVISIONS

| BEAM NO. | SIZE | TYPE | FY | PLATE 1 SHAPE | PLATE 1 WIDTH | PLATE 1 THICK | PLATE 2 WIDTH | PLATE 2 THICK | DIMENSIONS LENGTH | DIMENSIONS DIM. A | SUPPORTS LEFT | SUPPORTS RIGHT | STUDS NO. | STUDS SIZE | REMARKS |
|---|---|---|---|---|---|---|---|---|---|---|---|---|---|---|---|
| 7303 | - | 100 | 36 | 21WF55 | - | - | - | - | - | - | 272G | 272D | - | - | |
| 7304 | - | 100 | 50 | 18WF114 | - | - | - | - | - | - | 272D | 251J | - | - | |
| 7305 | - | 100 | 50 | 21WF68 | - | - | - | - | - | - | 430C | 430B | - | - | X |
| 7306 | - | 100 | 50 | 21WF112 | - | - | - | - | - | - | 251F | 237H | - | - | |
| 7307 | - | 100 | 50 | 21WF142 | - | - | - | - | - | - | 237G | 251F | - | - | |
| 7308 | - | 100 | 50 | 21WF68 | - | - | - | - | - | - | 430B | 430C | - | - | |
| 7309 | - | 100 | 50 | 18WF114 | - | - | - | - | - | - | 251J | 272D | - | - | |
| 7310 | - | 100 | 36 | 21WF55 | - | - | - | - | - | - | 272D | 272G | - | - | |
| 7311 | - | 100 | 50 | 21WF62 | - | - | - | - | - | - | 272G | 251F | - | - | |
| 7312 | - | 100 | 50 | 21WF68 | - | - | - | - | - | - | 430B | 430B | - | - | |
| 7313 | - | 100 | 50 | 21WF112 | - | - | - | - | - | - | 251F | 237H | - | - | |
| 7314 | - | 100 | 50 | 24I79.9 | - | - | - | - | - | - | 237G | 234J | - | - | |
| 7315 | - | 100 | 50 | 24I79.9 | - | - | - | - | - | - | 234J | 234J | - | - | |
| 7316 | - | 100 | 36 | 24I79.9 | | | | | - | - | 234J | 234J | - | - | |
| 7317 | - | 100 | 50 | 24I79.9 | - | - | - | - | - | - | 234J | 234J | - | - | |
| 7318 | - | 100 | 50 | 24I79.9 | - | - | - | - | - | - | 234J | 237J | - | - | |
| 7319 | - | 100 | 50 | 24I79.9 | - | - | - | - | - | - | 237G | 234J | - | - | |
| 7320 | - | 100 | 50 | 24I79.9 | - | - | - | - | - | - | 234J | 234J | - | - | |
| 7321 | - | 100 | 36 | 24I79.9 | - | - | - | - | - | - | 234J | 234J | - | - | |
| 7322 | - | 100 | 50 | 24I79.9 | - | - | - | - | - | - | 234J | 234J | - | - | |
| 7323 | - | 100 | 50 | 24I79.9 | - | - | - | - | - | - | 234J | 237G | - | - | |
| 7324 | - | 100 | 50 | 24WF120 | - | - | - | - | - | - | 237G | 251L | - | - | |
| 7325 | - | 100 | 36 | 24WF68 | - | - | - | - | - | - | 430B | 430B | - | - | |
| 7326 | - | 100 | 50 | 24WF76 | - | - | - | - | - | - | 251L | 272G | - | - | |
| 7327 | - | 100 | 36 | 24WF68 | - | - | - | - | - | - | 272G | 272G | - | - | |
| 7328 | - | 406 | 50 | 30WF124 | - | - | - | - | - | - | 272G | 251L | - | - | |
| 7329 | - | 100 | 36 | 24WF68 | - | - | - | - | - | - | 430B | 430B | - | - | |
| 7330 | - | 100 | 50 | 24WF110 | - | - | - | - | - | - | 251L | 237G | - | - | |
| 7331 | - | 100 | 50 | 24WF120 | - | - | - | - | - | - | 237I | 251L | - | - | |
| 7332 | - | 100 | 36 | 24WF68 | - | - | - | - | - | - | 430B | 430C | - | - | |
| 7333 | - | 406 | 50 | 30WF124 | - | - | - | - | - | - | 251L | 272D | - | - | |

REMARKS

LICENSED PROFESSIONAL ENGINEER — LESLIE E. ROBERTSON — No. 34360 — UNIVERSITY OF THE STATE OF NEW YORK

S-AB1-220

PROJECT THE WORLD TRADE CENTER | TITLE BEAM SCHEDULE TOWERS A AND B

| BEAM NO. | SIZE | TYPE | FY | SHAPE | PLATE 1 WIDTH | PLATE 1 THICK | PLATE 2 WIDTH | PLATE 2 THICK | DIMENSIONS LENGTH | DIMENSIONS DIM. A | SUPPORTS LEFT | SUPPORTS RIGHT | STUDS NO. | STUDS SIZE | REMARKS |
|---|---|---|---|---|---|---|---|---|---|---|---|---|---|---|---|
| 7334 | - | 100 | 36 | 24WF68 | - | - | - | - | - | - | 272D | 272G | - | - | |
| 7335 | - | 100 | 50 | 24WF76 | - | - | - | - | - | - | 272G | 251L | - | - | |
| 7336 | - | 100 | 36 | 24WF68 | - | - | - | - | - | - | 430B | 430B | - | - | |
| 7337 | - | 100 | 50 | 24WF110 | - | - | - | - | - | - | 251L | 237G | - | - | |
| 7338 | - | 100 | 50 | 241100 | - | - | - | - | - | - | 237G | 234K | - | - | |
| 7339 | - | 100 | 50 | 241100 | - | - | - | - | - | - | 234F | 234F | - | - | |
| 7340 | - | 100 | 36 | 24179.9 | - | - | - | - | - | - | 234F | 234F | - | - | |
| 7341 | - | 100 | 50 | 241100 | - | - | - | - | - | - | 234F | 234F | - | - | |
| 7342 | - | 100 | 50 | 241100 | - | - | - | - | - | - | 234K | 237G | - | - | |
| 7343 | - | 100 | 50 | 241100 | - | - | - | - | - | - | 237G | 234L | - | - | |
| 7344 | - | 100 | 50 | 241100 | - | - | - | - | - | - | 234K | 234K | - | - | |
| 7345 | - | 100 | 36 | 24179.9 | - | - | - | - | - | - | 234K | 234K | - | - | |
| 7346 | - | 100 | 50 | 241100 | - | - | - | - | - | - | 234K | 234K | - | - | |
| 7347 | - | 100 | 50 | 241100 | - | - | - | - | - | - | 234L | 237J | - | - | |
| 7348 | - | 100 | 50 | 21WF142 | - | - | - | - | - | - | 237G | 251L | - | - | |
| 7349 | - | 100 | 50 | 21WF82 | - | - | - | - | - | - | 251J | 272G | - | - | |
| 7350 | - | 100 | 50 | 241100 | - | - | - | - | - | - | 237G | 234K | - | - | |
| 7351 | - | 100 | 50 | 241100 | - | - | - | - | - | - | 237J | 234L | - | - | |
| 7352 | - | 100 | 50 | 241100 | - | - | - | - | - | - | 234L | 237J | - | - | |
| 7353 | - | 100 | 50 | 241100 | - | - | - | - | - | - | 234K | 237G | - | - | |
| 7354 | - | 100 | 36 | 8B13 | - | - | - | - | - | - | 17.4K | 164A | - | - | |
| 7355 | - | 100 | 36 | 8B13 | - | - | - | - | - | - | 164A | 17.4K | - | - | |
| 7358 | - | 100 | 50 | 24WF110 | - | - | - | - | - | - | 237G | 251L | - | - | |
| 7359 | - | 100 | 36 | 24WF68 | - | - | - | - | - | - | 430B | 430C | - | - | |
| 7360 | - | 406 | 50 | 30WF124 | - | - | - | - | - | - | 251L | 272D | - | - | |
| 7361 | - | 100 | 36 | 24WF68 | - | - | - | - | - | - | 272D | 272G | - | - | |
| 7362 | - | 100 | 50 | 24WF76 | - | - | - | - | - | - | 272G | 251L | - | - | |
| 7363 | - | 100 | 36 | 24WF68 | - | - | - | - | - | - | 430B | 43CB | - | - | |
| 7364 | - | 100 | 50 | 24WF110 | - | - | - | - | - | - | 251L | 237G | - | - | |
| 7365 | - | 100 | 50 | 24WF145 | - | - | - | - | - | - | 237I | 251L | - | - | |
| 7366 | - | 100 | 50 | 24WF68 | - | - | - | - | - | - | 430B | 43CB | - | - | |

REMARKS

PROJECT: THE WORLD TRADE CENTER

TITLE: BEAM SCHEDULE TOWERS A AND B

DATE: 10/18/68

REVISIONS

| BEAM NO. | SIZE | TYPE | FY | PLATE 1 SHAPE | PLATE 1 WIDTH | PLATE 1 THICK | PLATE 2 WIDTH | PLATE 2 THICK | DIMENSIONS LENGTH | DIMENSIONS DIM. A | SUPPORTS LEFT | SUPPORTS RIGHT | STUDS NO. | STUDS SIZE | REMARKS |
|---|---|---|---|---|---|---|---|---|---|---|---|---|---|---|---|
| 7367 | - | 100 | 50 | 24WF76 | - | - | - | - | - | - | 251M | 272C | - | - | |
| 7368 | - | 100 | 36 | 24WF68 | - | - | - | - | - | - | 272G | 272G | - | - | |
| 7369 | - | 406 | 50 | 30WF124 | - | - | - | - | - | - | 272G | 251L | - | - | |
| 7370 | - | 100 | 36 | 24WF68 | - | - | - | - | - | - | 430B | 430B | - | - | |
| 7371 | - | 100 | 50 | 24WF110 | - | - | - | - | - | - | 251L | 237G | - | - | |
| 7372 | - | 100 | 50 | 21WF68 | - | - | - | - | - | - | 430B | 430B | - | - | |

REMARKS

LESLIE E. ROBERTSON
No. 34980
UNIVERSITY OF THE STATE OF NEW YORK

S-AB1-222

**SKILLING, HELLE, CHRISTIANSEN, ROBERTSON** — Structural & Civil Engineers

PROJECT: THE WORLD TRADE CENTER | TITLE: BEAM SCHEDULE TOWERS A AND B | DATE: 11/27/68

DIVISIONS

| BEAM NO. | SIZE | TYPE | FY | SHAPE | PLATE 1 WIDTH | PLATE 1 THICK | PLATE 2 WIDTH | PLATE 2 THICK | DIMENSIONS LENGTH | DIMENSIONS DIM. A | SUPPORTS LEFT | SUPPORTS RIGHT | STUDS NO. | STUDS SIZE | REMARKS |
|---|---|---|---|---|---|---|---|---|---|---|---|---|---|---|---|
| 8000 | - | 100 | 36 | 10WF21 | - | - | - | - | - | - | 111I | 471A | - | - | |
| 8001 | - | 100 | 36 | 10WF21 | - | - | - | - | - | - | 541A | 540A | - | - | |
| 8002 | - | 100 | 36 | 12WF40 | - | - | - | - | - | - | 370K | 370K | - | - | |
| 8003 | - | 100 | 36 | 12WF40 | - | - | - | - | - | - | 369A | 369B | - | - | |
| 8004 | 16X5-1/28X | 202 | 36 | - | 4 | 3/8 | 16 | 3/4 | - | - | 285A | 274G | - | - | |
| 8005 | - | 100 | 36 | 10WF21 | - | - | - | - | - | - | 540A | 541A | - | - | X |
| 8006 | - | 100 | 36 | 16B26 | - | - | - | - | - | - | 26.5K | 509A | - | - | |
| 8007 | - | 100 | 36 | 10WF21 | - | - | - | - | - | - | 471A | 111I | - | - | |
| 8008 | - | 100 | 36 | 10WF25 | - | - | - | - | - | - | 506B | 506A | - | - | |
| 8009 | - | 100 | 36 | 12WF36 | - | - | - | - | - | - | 17.4K | 17.4K | - | - | |
| 8010 | - | 100 | 36 | 14WF30 | - | - | - | - | - | - | 508 | 512 | - | - | 1 |
| 8011 | - | 100 | 36 | 10WF21 | - | - | - | - | - | - | 471B | 111I | - | - | |
| 8012 | 16X8WF | 405 | 36 | 16B31 | 8 | 1/2 | - | - | 15FT 0 | - | 294D | 463C | - | - | |
| 8013 | 27X12WF | 405 | 36 | 27WF84 | 12 | 3/8 | - | - | 15FT 0 | 5FT 6 | 251G | 482B | 30 | 3/4X3 | |
| 8014 | 8X68 | 405 | 36 | 8B13 | 6 | 1/4 | - | - | 6FT 0 | - | 17.4K | 17.4K | - | - | |
| 8015 | 16X6WF | 405 | 50 | 16B26 | 6 | 3/8 | - | - | 18FT 0 | - | 201S | 179A | 10 | 3/4X3 | |
| 8016 | - | 100 | 50 | 21WF55 | - | - | | | - | | 40.0K | 40.0K | 76 | 3/4X3 | |
| 8017 | 8X6WF | 405 | 36 | 8B13 | 6 | 1/4 | - | - | 4FT 0 | - | 484 | 15.0K | - | - | |
| 8018 | 30X10 8U | 300 | 36 | - | 10 | 1-3/4 | 26-1/2 | 1/2 | - | - | 201L | 283Q | 15 | 3/4X3 | |
| 8019 | 12X8WF | 405 | 36 | 12WF27 | 8 | 3/8 | - | - | 16FT 0 | - | 40.0K | 40.0K | 36 | 3/4X3 | |
| 8020 | - | 100 | 50 | 18WF60 | | - | | - | - | - | 45.0K | 45.0K | - | - | |
| 8021 | 16X7WF | 405 | 50 | 16B31 | 7 | 1/2 | - | - | 18FT 0 | - | 45.0K | 45.0K | 24 | 3/4X3 | 6 |
| 8022 | 10X7WF | 405 | 36 | 10B15 | 7 | 5/8 | - | - | 11FT 0 | - | 30.0K | 30.0K | - | - | |
| 8023 | 10X7WF | 405 | 36 | 10B15 | 7 | 5/8 | - | - | 11FT 0 | - | 30.0K | 30.0K | - | - | |
| 8024 | 14X8WF | 405 | 36 | 14B22 | 8 | 1/2 | - | - | 12FT 0 | 1FT 0 | 342A | 370J | 32 | 3/4X3 | 2,6 |
| 8025 | 16X8WF | 405 | 36 | 16B26 | 8 | 3/8 | - | - | 12FT 0 | - | 111P | 201P | 24 | 3/4X3 | 3,4 |
| 8026 | 12X8WF | 405 | 36 | 12WF27 | 8 | 3/8 | - | - | 14FT 0 | - | 35.0K | 35.0K | - | - | 4 |
| 8027 | 16X8WF | 405 | 36 | 16B26 | 8 | 3/8 | - | - | 12FT 0 | - | 111P | 201P | 18 | 3/4X3 | 5 |
| 8028 | 16X8WF | 405 | 36 | 16B26 | 8 | 1/2 | - | - | 12FT 0 | - | 111P | 201P | 24 | 3/4X3 | 3 |
| 8029 | 12X8WF | 405 | 36 | 12WF27 | 8 | 1/2 | - | - | 14FT 0 | - | 45.0K | 45.0K | - | - | |
| 8030 | 12X8WF | 405 | 36 | 12WF27 | 8 | 3/8 | - | - | 14FT 0 | - | 35.0K | 35.0K | - | - | |
| 8031 | 16X8WF | 405 | 36 | 16B31 | 8 | 1/2 | - | - | 14FT 0 | - | 111P | 111P | - | - | 3 |
| 8032 | - | 100 | 36 | 16WF45 | - | - | - | - | - | - | 17.4K | 17.4K | - | - | |
| 8033 | - | 100 | 36 | 9CH13.4 | - | - | - | - | - | - | 501A | 501A | - | - | |

REMARKS

1. DETAIL 178A RIGHT END OF BEAM
2. AT LEFT CONNECTION, 342A, MAKE WEB CONNECTION STD FOR 45.0K
3. AT LEFT AND RIGHT CONNECTIONS, USE PLATE 3/4X12 INCH LONG, AND BOLTS FOR 100.0K
4. USE COVER PLATES ONLY AT FLOOR 84 TOWER B
5. USE COVER PLATES ONLY AT FLOOR 91 TOWER B
6. USE COVER PLATES ONLY AT FLOOR 83 TOWER A, AND ONLY AT FLOORS 84 AND 92 TOWER B

**SKILLING, HELLE, CHRISTIANSEN, ROBERTSON** — Structural & Civil Engineers

PROJECT: THE WORLD TRADE CENTER | TITLE: BEAM SCHEDULE TOWERS A AND B | DATE: 1/10/69

REVISIONS

| BEAM NO. | SIZE | TYPE | FY | SHAPE | PLATE 1 WIDTH | PLATE 1 THICK | PLATE 2 WIDTH | PLATE 2 THICK | DIMENSIONS LENGTH | DIMENSIONS DIM. A | SUPPORTS LEFT | SUPPORTS RIGHT | STUDS NO. | STUDS SIZE | REMARKS |
|---|---|---|---|---|---|---|---|---|---|---|---|---|---|---|---|
| 8034 | - | 100 | 36 | 16B26 | - | - | - | - | - | - | 452A | 462A | - | - | |
| 8035 | 14X7 WF | 405 | 36 | 14B22 | 7 | 1/4 | - | - | 18FT 0 | - | 35.0K | 35.0K | - | - | 1 |
| 8036 | 16X9 WF | 405 | 36 | 16WF40 | 9 | 3/8 | - | - | 18FT 0 | - | 106E | 106E | 42 | 3/4X3 | 2 |
| 8037 | 12X6 WF | 405 | 36 | 12B16.5 | 6 | 1/4 | - | - | 10FT 0 | - | 35.0K | 35.0K | 15 | 3/4X3 | 2 |
| 8038 | 16X7 WF | 405 | 36 | 16B31 | 7 | 3/8 | - | - | 16FT 0 | - | 35.0K | 35.0K | - | - | 2 |
| 8039 | 16X9 WF | 405 | 36 | 16WF40 | 9 | 1/2 | - | - | 18FT 0 | - | 266B | 106F | 42 | 3/4X3 | |
| 8040 | - | 100 | 36 | 10WF45 | - | - | - | - | - | - | 35.0K | 35.0K | 15 | 3/4X3 | |
| 8041 | 16X7 WF | 405 | 36 | 16B31 | 7 | 1/2 | - | - | 16FT 0 | - | 35.0K | 35.0K | - | - | |
| 8042 | 14X7 WF | 405 | 36 | 14B22 | 7 | 1/4 | - | - | 10FT 0 | 1FT 0 | 35.0K | 35.0K | 13 | 3/4X3 | |
| 8043 | 12X8 WF | 405 | 50 | 12WF31 | 8 | 3/8 | - | - | 10FT 0 | 1FT 0 | 357F | 201Q | 15 | 3/4X3 | |
| 8044 | 10X6 WF | 405 | 36 | 10B15 | 6 | 1/4 | - | - | 10FT 0 | | 179B | 25.0K | - | - | 1 |
| 8045 | 12X5-1/2WF | 405 | 50 | 12B19 | 5-1/2 | 1/4 | - | - | 14FT 0 | - | 283R | 111K | 30 | 3/4X3 | |
| 8048 | - | 100 | 36 | 16WF36 | - | - | - | - | - | - | 808 | 40.0K | - | - | |
| 8049 | - | 100 | 36 | 16WF36 | - | - | - | - | - | - | 30.0K | 30.0K | - | - | |
| 8050 | - | 100 | 36 | 16WF36 | - | - | - | - | - | - | 808 | 25.0K | - | - | |
| 8051 | - | 100 | 36 | 16WF50 | - | - | - | - | - | - | 40.0K | 40.0K | - | - | |
| 8052 | - | 100 | 36 | 16WF45 | - | - | - | - | - | - | 25.0K | 25.0K | - | - | |
| 8053 | 21X8WF | 402 | 36 | 21WF68 | 7-1/2 | 1 | - | - | 16FT 0 | - | 35.3K | 35.3K | - | - | |
| 8054 | 30X15WF | 402A | 36 | 30WF172 | 13-3/4 | 1-5/8 | 6 | 1-1/4 | 22FT 0 | 2FT 0 | 151 | 237C | - | - | |
| 8055 | 30X15WF | 402A | 36 | 30WF172 | 13-3/4 | 1-5/8 | 6 | 1-1/4 | 22FT 0 | - | 237C | 151 | - | - | 6 |
| 8056 | - | 600 | 36 | 6BX15.4 | - | - | - | - | - | - | 451A | 451A | - | - | 4 |
| 8057 | - | 600 | 36 | 6BX15.4 | - | - | - | - | - | - | 451A | 451A | - | - | 4 |
| 8058 | - | 100 | 36 | 12WF27 | - | - | - | - | - | - | 809B | 15.0K | - | - | |
| 8059 | 16X5-1/2WF | 402 | 50 | 16B31 | 4 | 1 | - | - | 18FT 0 | 1FT 0 | 364E | 335B | 30 | 3/4X3 | 5 |
| 8060 | 18X4CH | 501 | 36 | 18CH42.7 | 3 | 1 | - | - | 18FT 0 | 1FT 0 | 246B | 249A | - | - | |
| 8061 | - | 100 | 36 | 12WF27 | - | - | - | - | - | - | 15.0K | 15.0K | - | - | |
| 8062 | 16X7 WF | 402 | 36 | 16WF40 | 5 | 1/2 | - | - | 16FT 0 | - | 26.5K | 26.5K | - | - | |
| 8063 | 16X7 WF | 402 | 36 | 16WF40 | 5 | 1/2 | - | - | 16FT 0 | - | 26.5K | 26.5K | - | - | |
| 8064 | - | 403 | 50 | 30WF108 | - | - | - | - | - | - | 154A | 231A | 164 | 3/4X3 | 7 |
| 8065 | - | 403 | 50 | 30WF108 | - | - | - | - | - | - | 231A | 154A | 164 | 3/4X3 | 7 |

REMARKS

1. USE COVER PLATES ONLY AT FLOORS 84 & 92 TOWER B.
2. USE COVER PLATES ONLY AT FLOOR 91 TOWER B.
3. SEE DETAIL 2098 RIGHT END OF BEAM.
4. STANDARD STRUCT. TUBING 6X4X1/4.
5. DETAIL 405 RIGHT END OF BEAM.
6. END OF PLATES 1 AND 2 AT 2FT0 FROM RIGHT END OF BEAM.
7. AT FLOOR 44 TOWER A USE BOTTOM COVER PLATE 12X1 FOR FULL LENGTH IN LIEU OF PLATE SHOWN FOR BEAM TYPE 403.

No. 36350 STATE OF NEW YORK

5-881-242

**SKILLING, HELLE, CHRISTIANSEN, ROBERTSON** — **Structural & Civil Engineers**

PROJECT: THE WORLD TRADE CENTER | TITLE: BEAM SCHEDULE TOWERS A AND B | DATE: 9/30/69

EVISIONS

| BEAM NO. | SIZE | TYPE | FY | SHAPE | PLATE 1 WIDTH | PLATE 1 THICK | PLATE 2 WIDTH | PLATE 2 THICK | DIMENSIONS LENGTH | DIM. A | SUPPORTS LEFT | SUPPORTS RIGHT | STUDS NO. | STUDS SIZE | REMARKS |
|---|---|---|---|---|---|---|---|---|---|---|---|---|---|---|---|
| 8067 | 16X11-1/2WF | 400 | 36 | 16WF96 | 9 | 3/4 | - | - | 24FT 0 | - | 106G | 72.0K | 106 | 3/4X3 | |
| 8068 | 16X11-1/2WF | 400 | 36 | 16WF96 | 8 | 3/4 | - | - | 24FT 0 | - | 106G | 72.0K | 100 | 3/4X3 | |
| 8069 | - | 100 | 36 | 12B22 | - | - | - | - | - | - | 26.5K | 26.5K | 30 | 3/4X3 | |
| 8070 | - | 100 | 36 | 12B19 | - | - | - | - | - | - | 26.5 | 105L | 6 | 3/4X3B | |
| 8071 | - | 100 | 36 | 12B22 | - | - | - | - | - | - | 26.5K | 26.5K | 20 | 3/4X3 | |

LICENSED PROFESSIONAL ENGINEER
LESLIE E. ROBERTSON
No. 34360
STATE OF NEW YORK

5-AB2- 1 NOTES & INDEX
5-AB2- 2 BEAM TYPE 200 - 210, 220
5-AB2- 2.1 BEAM TYPE 203, 206, 207, 208
5-AB2- 3 NOT USED
5-AB2- 4 BEAM TYPE 250 - 251
5-AB2- 5 NOT USED
5-AB2- 6 BEAM TYPE 300, 320, 321
5-AB2- 7 BEAM TYPE 301
5-AB2- 8 NOT USED
5-AB2- 9 BEAM TYPE 305, 306, 307
5-AB2-10 BEAM TYPE 400, 401
5-AB2-11 BEAM TYPE 402, 405
5-AB2-11.1 BEAM TYPE 402A
5-AB2-12 BEAM TYPE 403, 444
5-AB2-12.1 BEAM TYPE 441, 457
5-AB2-12.2 BEAM TYPE 442,448
5-AB2-12.3 BEAM TYPE 443,447
5-AB2-12.4 DETAIL 1, 2, 3, 4
5-AB2-12.5 TRUSS SEAT B1 - B4
5-AB2-12.6 TRUSS SEAT B5 - B6
5-AB2-13 BEAM TYPE 404,425
5-AB2-14 BEAM TYPE 406 - 412
5-AB2-15 BEAM TYPE 500, 507
5-AB2-16 BEAM TYPE 501, 508, 516
5-AB2-17 BEAM TYPE 502, 509, 511, 514
5-AB2-18 BEAM TYPE 503, 510
5-AB2-19 BEAM TYPE 504, 515
5-AB2-20 BEAM TYPE 505
5-AB2-21 BEAM ELEVATION 400, 401, 402, 405
5-AB2-22 BEAM TYPE 512, 513
5-AB2-23 BEAM TYPE 415 - 421,470
5-AB2-24 BEAM TYPE 700
5-AB2-25 BEAM TYPE 422, 423, 424
5-AB2-26 BEAM TYPE 310 - 313
5-AB2-27 BEAM TYPE 310 - 313
5-AB2-28 BEAM TYPE 428 - 431
5-AB2-29 BEAM TYPE 426, 427, 432, 435
5-AB2-30 BEAM TYPE 433
5-AB2-31 BEAM TYPE 434, 458, 459
5-AB2-32 BEAM TYPE 436, 437
5-AB2-33 BEAM TYPE 440
5-AB2-34 BEAM TYPE 446, 449
5-AB2-35 BEAM ELEVATION TYPE 451, 452, 456
5-AB2-36 BEAM ELEVATION TYPE 453, 454, 455
5-AB2-37 BEAM ELEVATION TYPE 413, 414
5-AB2-38 BEAM TYPE 460 - 463, 465, 467
5-AB2-39 BEAM TYPE 464, 466
5-AB2-40 BEAM TYPE 469

NOTES

1. SEE 5-AB1 FOR BEAM SCHEDULE
2. BEAM TYPE 100 IS A ROLLED SHAPE
3. BEAM TYPE 600 IS A RECTANGULAR SEAMLESS STRUCTURAL TUBING AND SHALL CONFORM TO ASTM A501.

WORTHINGTON, SKILLING, HELLE & JACKSON — Civil & Structural Engineers

PROJECT THE WORLD TRADE CENTER | TITLE BEAM TYPE 406-412 | DATE 5-1-67

REVISIONS

5-22-67
9-15-67
11-21-67

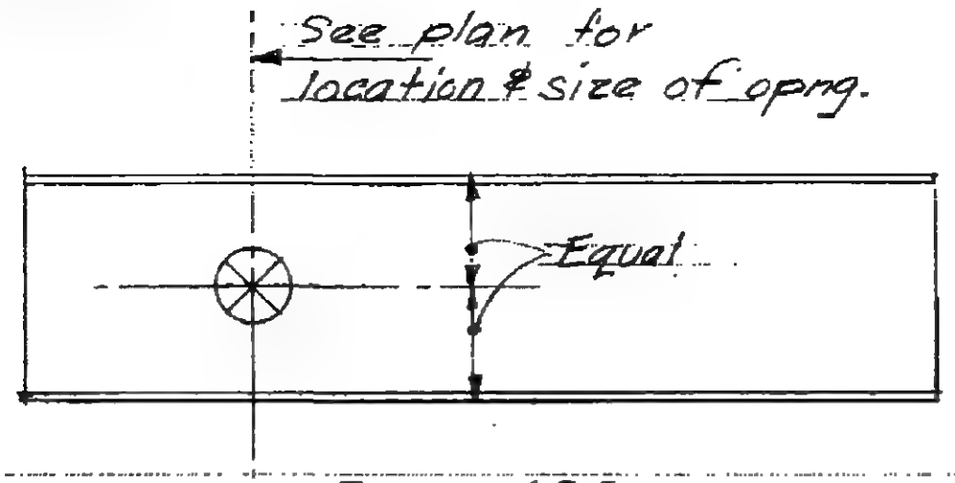


## Type 406

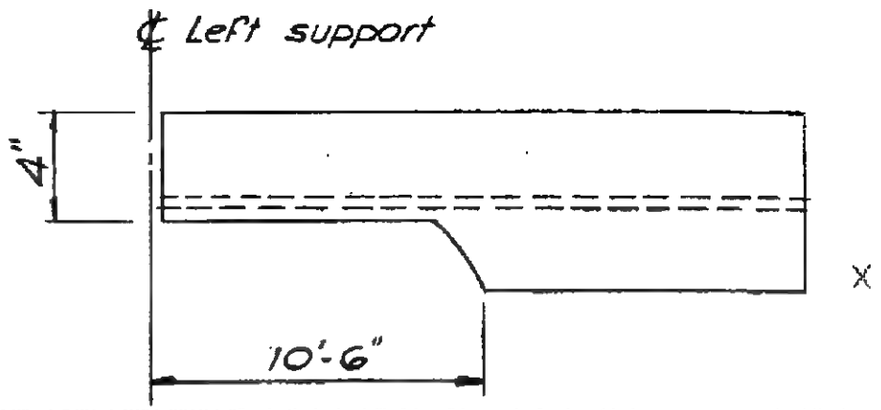


## Type 411

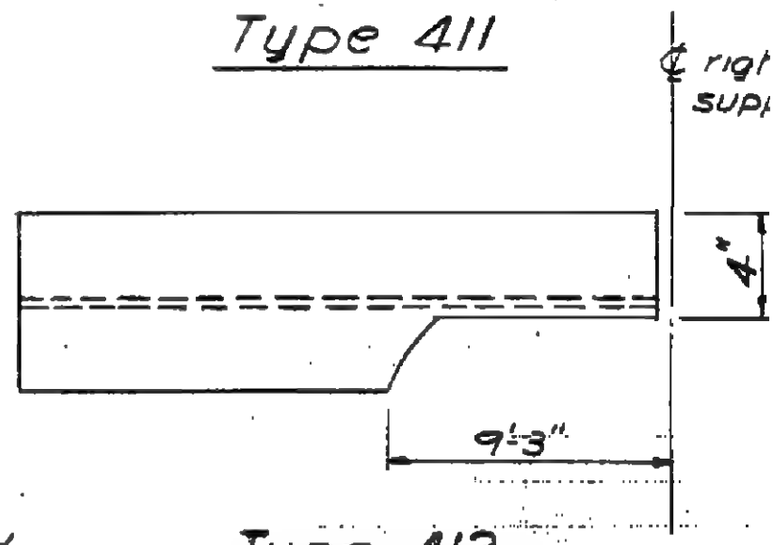


## Type 412

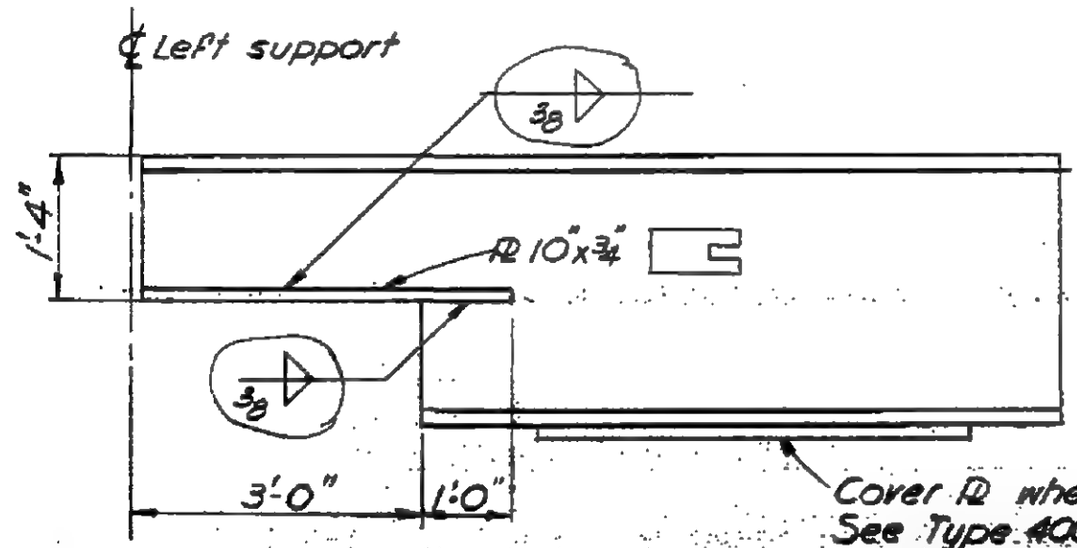


## Type 407

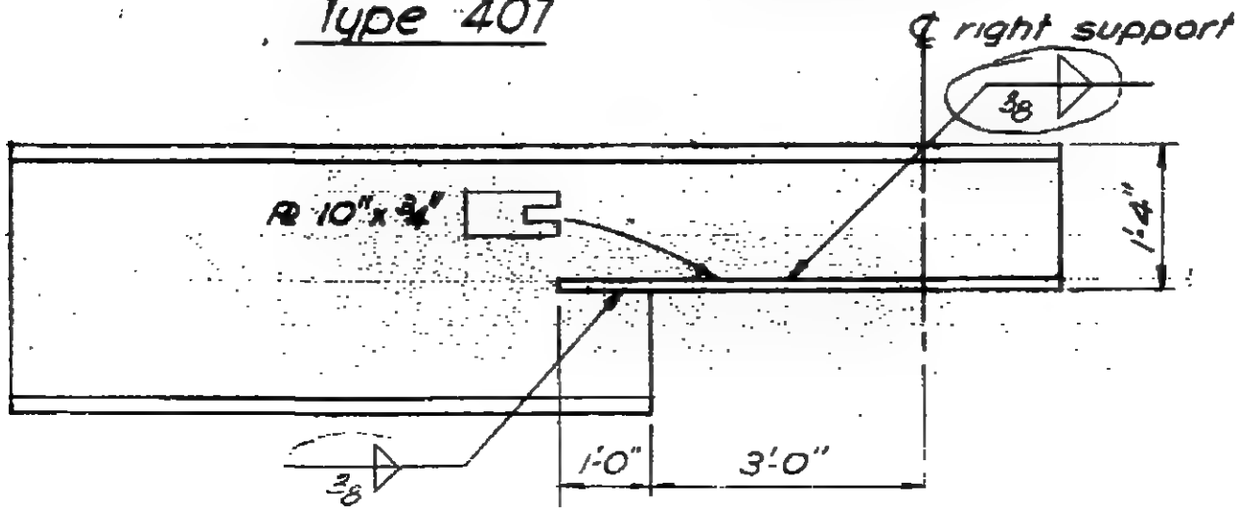


## Type 408

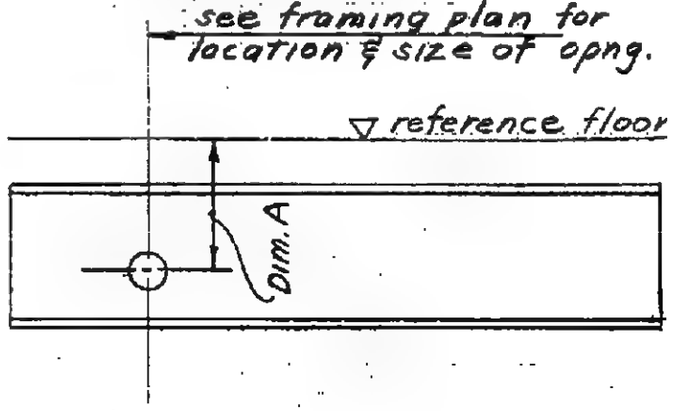


## Type 409

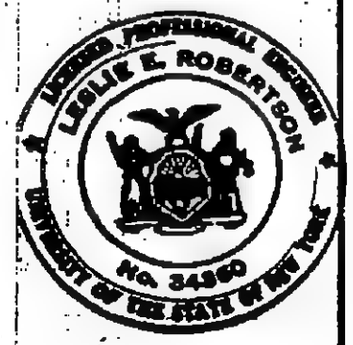


5-AB2-1

WORTHINGTON, SKILLING, HELLE & JACKSON — Civil & Structural Engineers

PROJECT THE WORLD TRADE CENTER | TITLE BEAM TYPE 200 thru 210, 220 | DATE 5-1-67

REVISIONS
6-12-67
9-15-67
10-15-67
11-21-67

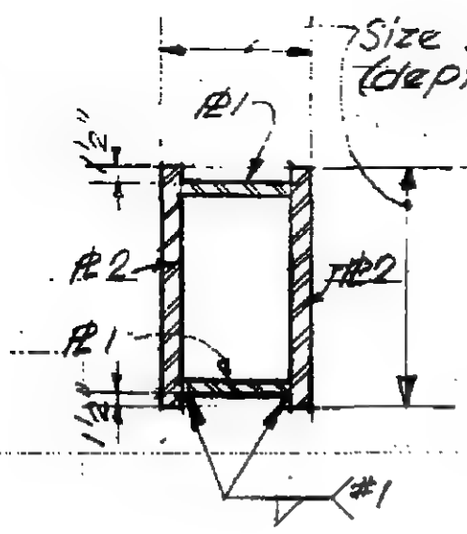


Section a-a
Type 201 & 204

TYPE 200

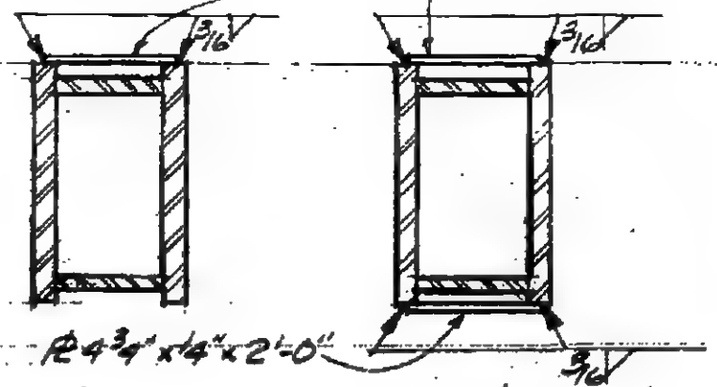


Section b-b
Type 202 & 205
See type 200 for details

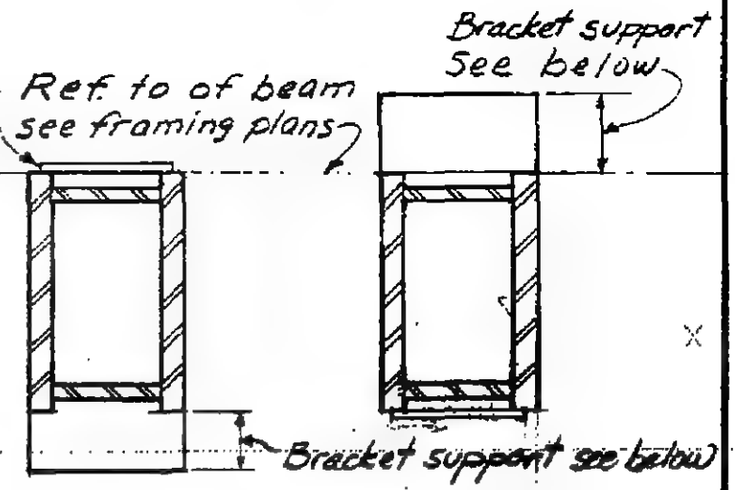


Section c-c
Type 206, 207, 203

Section d-d
Type 208

| PL 2 | Weld #1 |
|---|---|
| to 3/4 | 1/4 |
| 13/16 to 1 1/2 | 5/16 |
| 1 9/16 to 2 1/4 | 3/8 |

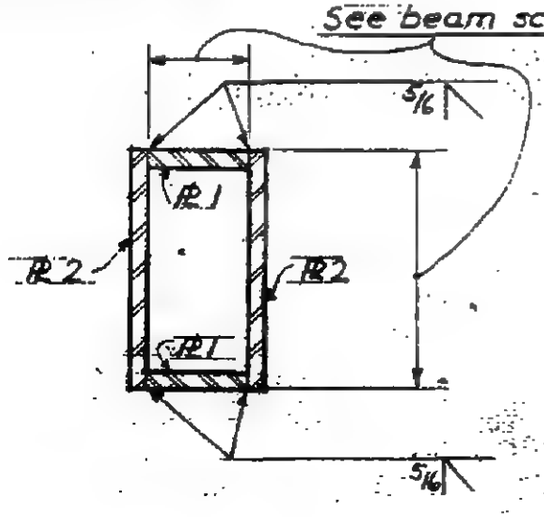


Section e-e
Type 220

PL top - type 201
PL top & bottom type 202

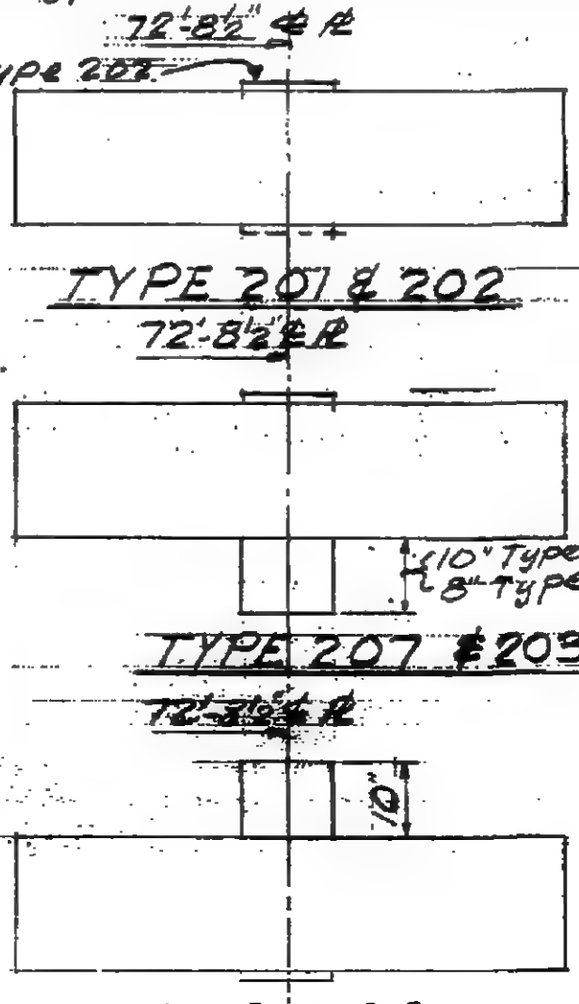


TYPE 201 & 202
72'-8 1/2" ℄ PL

TYPE 207 & 203
72'-3 1/2" ℄ PL

TYPE 208

PL top - type 204
PL top & bottom type 205

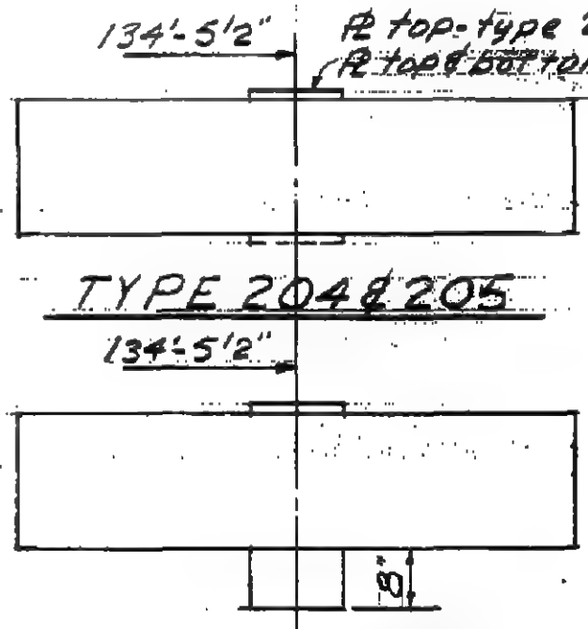


TYPE 204 & 205
134'-5 1/2"

TYPE 206

NOTE
For bracket support
Types ~~203, 206~~, 207, 208
See S-AB2-2.1

LICENSED PROFESSIONAL ENGINEER
LESLIE E. ROBERTSON
No. 34360
UNIVERSITY OF THE STATE OF NEW YORK

5-AB2-2

SKILLING - HELLE - CHRISTIANSEN - ROBERTSON  Structural & Civil Engineers

PROJECT THE WORLD TRADE CENTER | TITLE BEAM TYPE 203, 206, 207 & 208 | DATE 10-15-67

REVISIONS

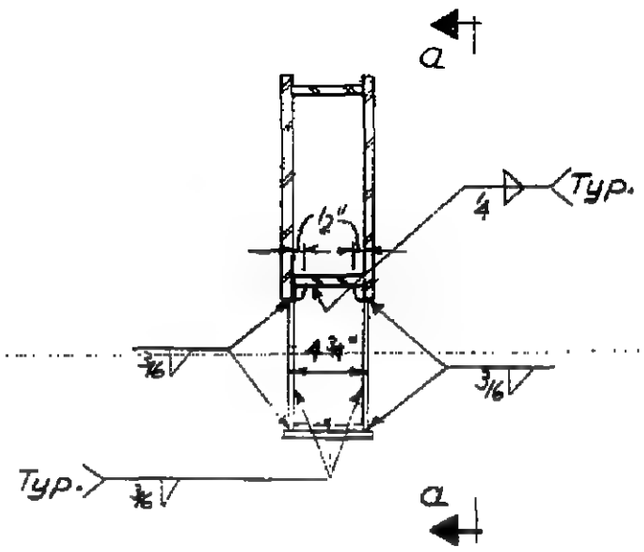


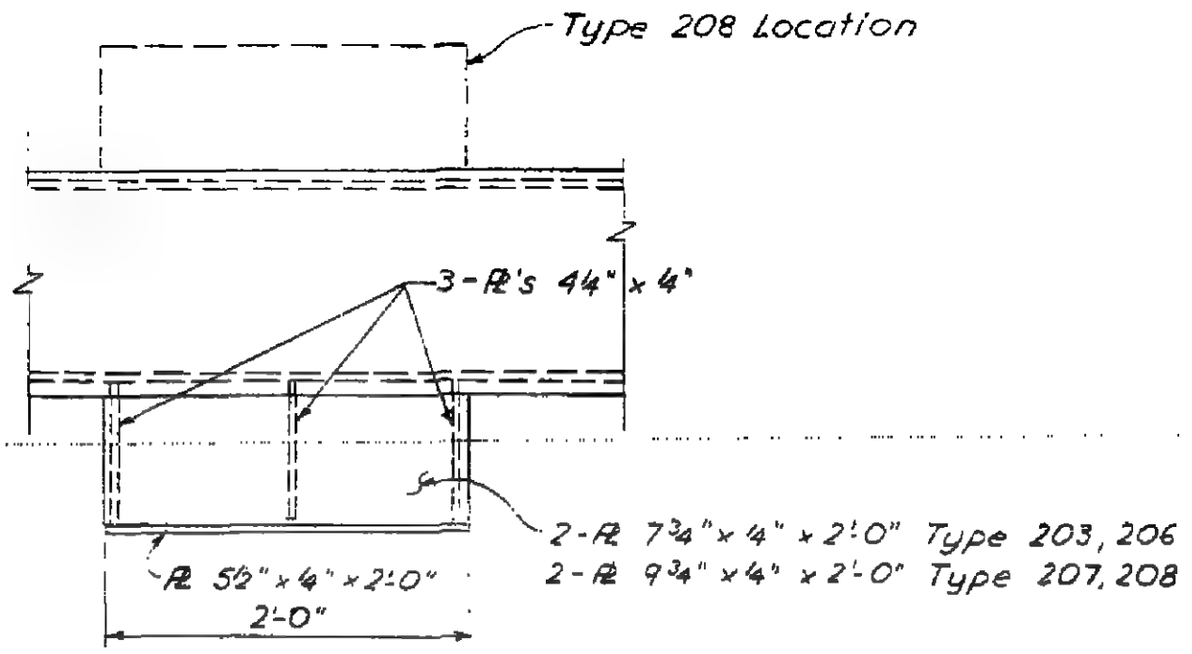


Section a-a

## Bracket Support Detail

LICENSED PROFESSIONAL ENGINEER
LESLIE E. ROBERTSON
No. 34360
STATE OF NEW YORK

5-AB2-2.1

WORTHINGTON, SKILLING, HELLE & JACKSON — Civil & Structural Engineers

PROJECT THE WORLD TRADE CENTER | TITLE BEAM TYPE 250 - 251 | DATE 5-1-67

REVISIONS
6-19-67
11-17-67
12-21-67

- locate to suit elevator beams

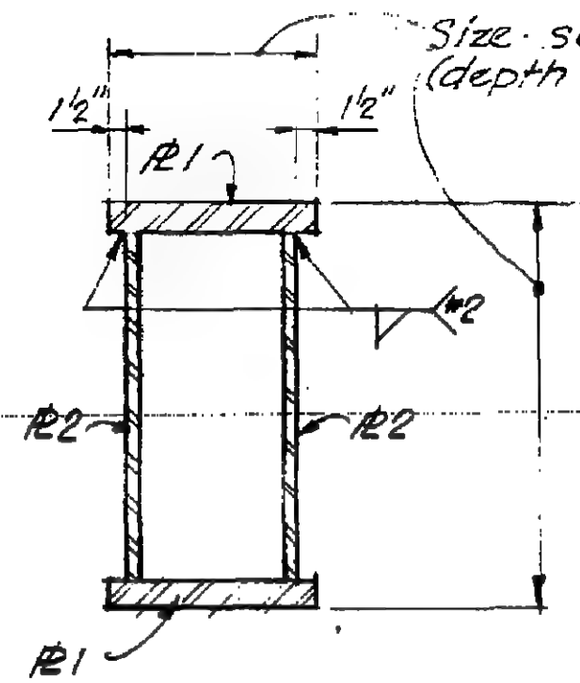


TYPE 250

| ℄ 1 | Weld #2 |
|---|---|
| to 3/4 | 1/4 |
| 13/16 to 1½ | 5/16 |
| 1 9/16 to 2¼ | 3/8 |

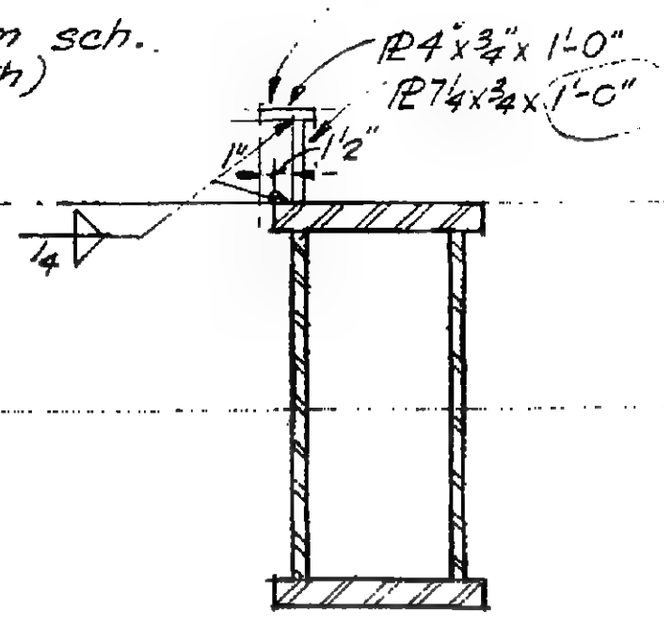


TYPE 251
See type 250
for details not shown

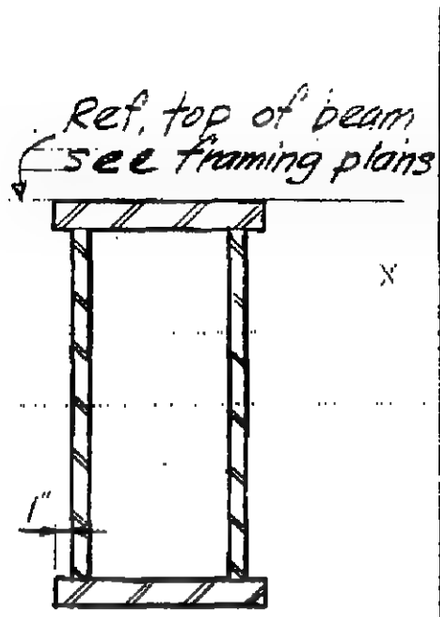


TYPE 252
See type 250 for details not shown.

LICENSED PROFESSIONAL ENGINEER
LESLIE E. ROBERTSON
No. 34360
STATE OF NEW YORK

5-AB2-4

WORTHINGTON, SKILLING, HELLE & JACKSON — Civil & Structural Engineers

PROJECT THE WORLD TRADE CENTER | TITLE BEAM TYPE 300, 320, 321 | DATE 5-1-67

REVISIONS
11-10-67
11-21-67
7-17-68

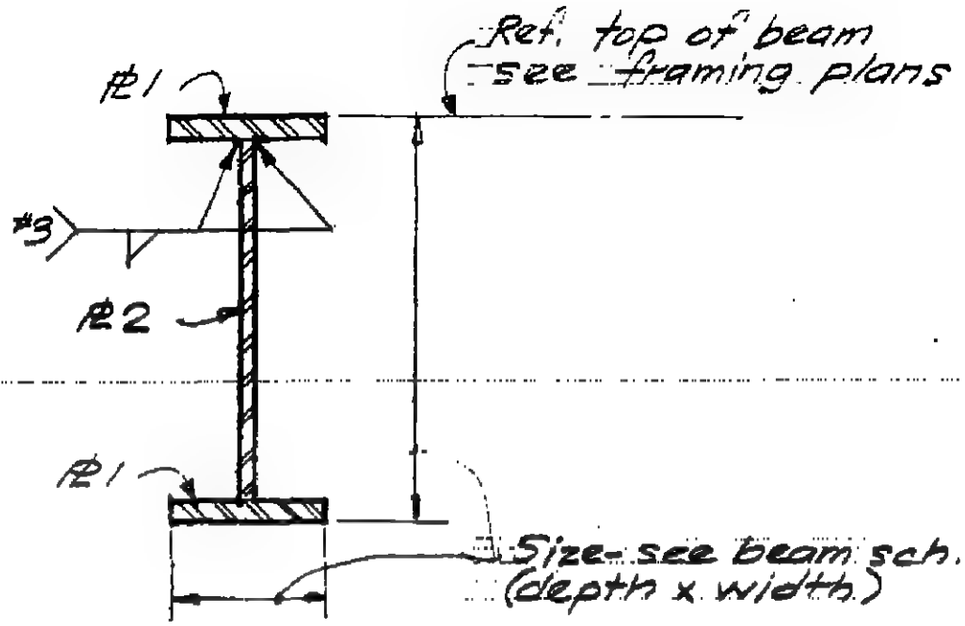


300

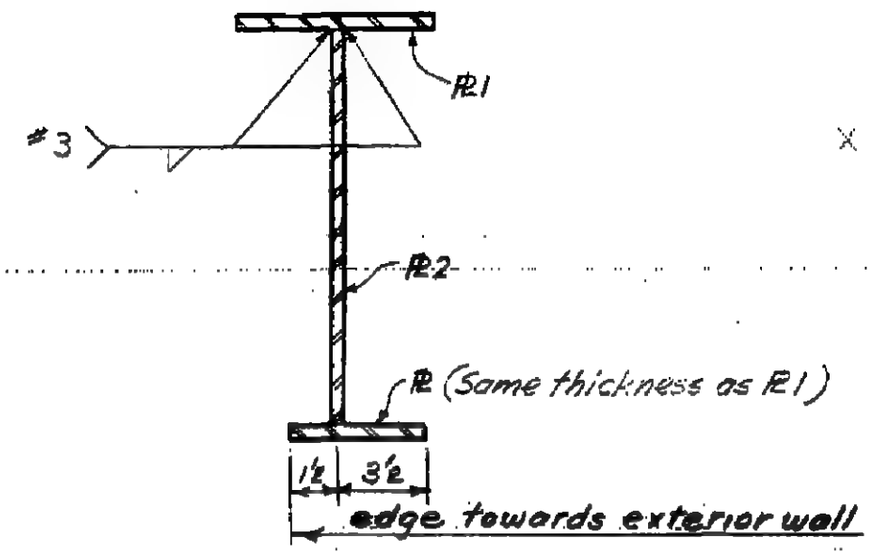


320

| PL 1 | Weld #3 |
|---|---|
| to 3/4 | 1/4 |
| 13/16 to 1/2 | 5/16 |
| 1 9/16 to 2 | 3/8 |

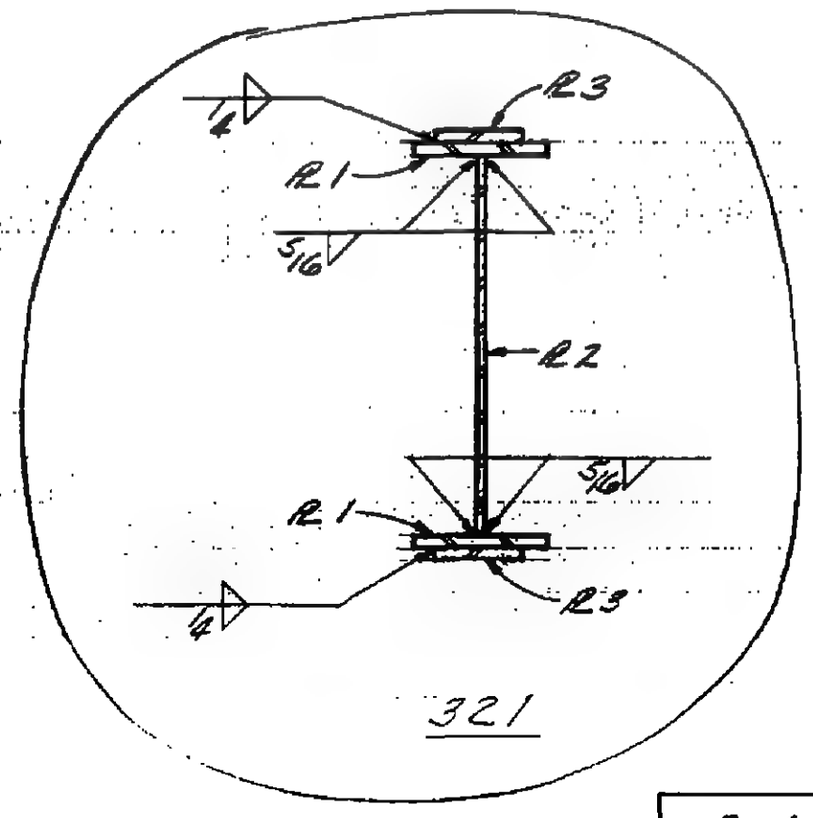


321

LICENSED PROFESSIONAL ENGINEER
LESLIE E. ROBERTSON
No. 34360
UNIVERSITY OF THE STATE OF NEW YORK

5-AB2-6

WORTHINGTON, SKILLING, HELLE & JACKSON — Civil & Structural Engineers

PROJECT THE WORLD TRADE CENTER | TITLE BEAM TYPE 301 | DATE 5-1-67

REVISIONS

8-3-67

11-15-67

Ref. top of beam
See framing plans

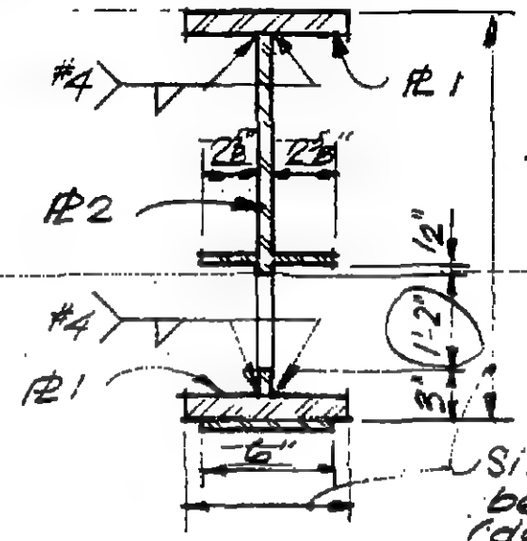


Section

℄ of opng. see framing plans

Left or right end

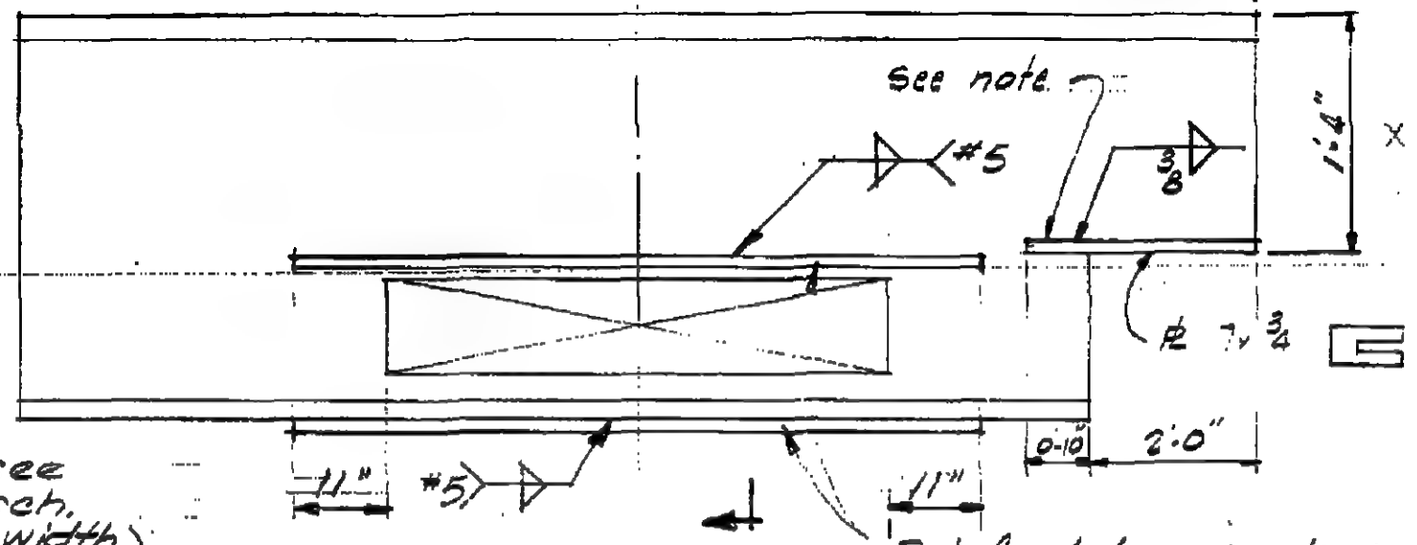


Elevation

Reinf. plates - see beam schedule for thickness & length

| Pl 1 | Weld #4 |
|---|---|
| to ¾ | ¼ |
| 13/16 to 1½ | 5/16 |
| 1 9/16 to 24 | ⅜ |

| Reinf. Pl | Weld #5 |
|---|---|
| to ¾ | ¼ |
| 13/16 to ½ | 5/16 |

Note:
Notch beam as shown for end support scheduled detail 220 (S-AB1-27)

LICENSED PROFESSIONAL ENGINEER
LESLIE E. ROBERTSON
No. 34360
REGISTERED OF THE STATE OF NEW YORK

5-AB2-7

WORTHINGTON, SKILLING, HELLE & JACKSON — Civil & Structural Engineers

PROJECT THE WORLD TRADE CENTER | TITLE BEAM TYPE 305, 306, 307 | DATE 5-1-67

REVISIONS
6-30-67
7-14-67
10-31-67

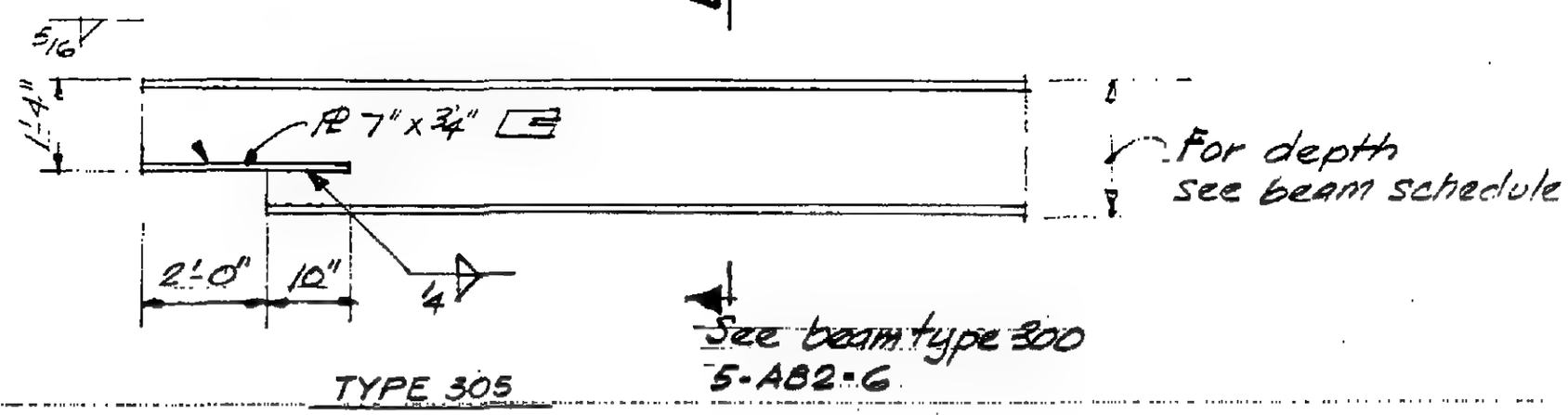


TYPE 305

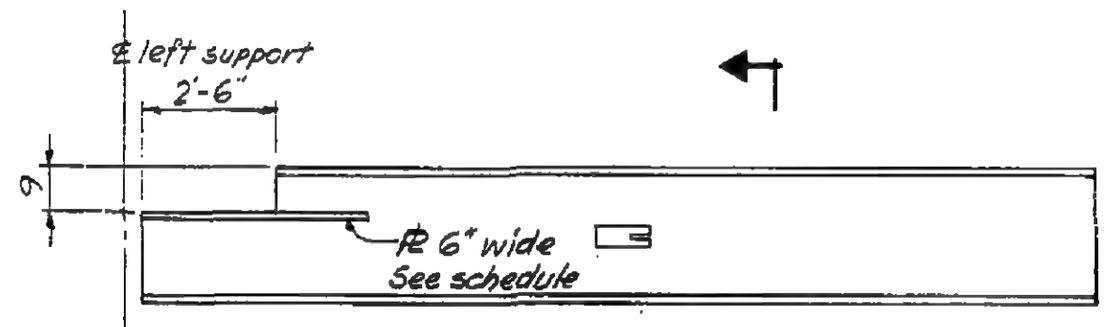


TYPE 306

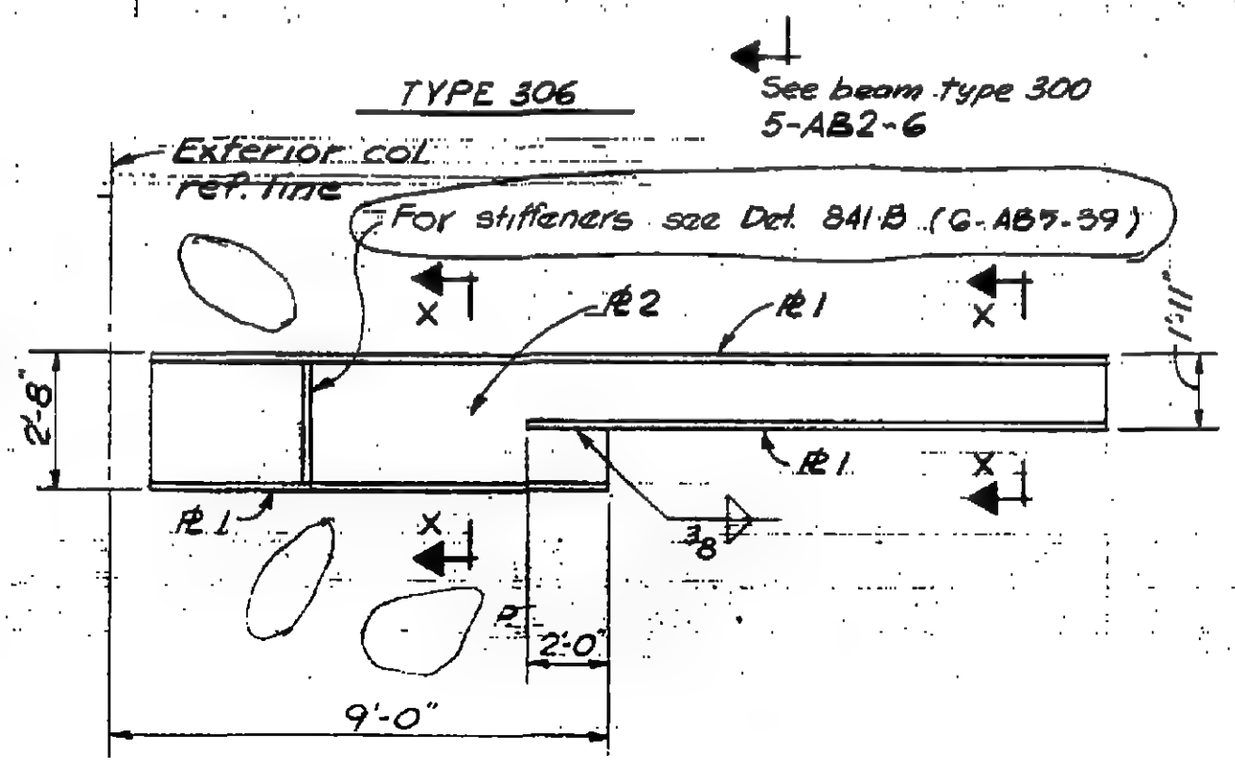


TYPE 307

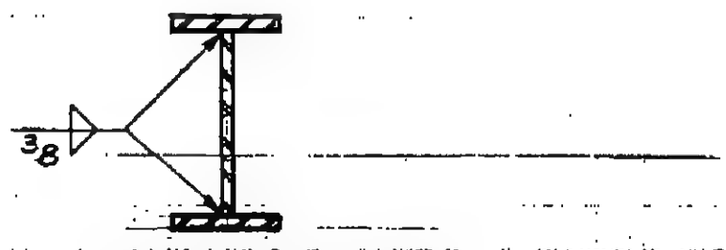


Section X-X

5-AB2-9

WORTHINGTON, SKILLING, HELLE & JACKSON — Civil & Structural Engineers

PROJECT THE WORLD TRADE CENTER | TITLE BEAM TYPE 400, 401 | DATE 5-1-67

REVISIONS

6-5-67
9-15-67
9-29-67
11-21-67

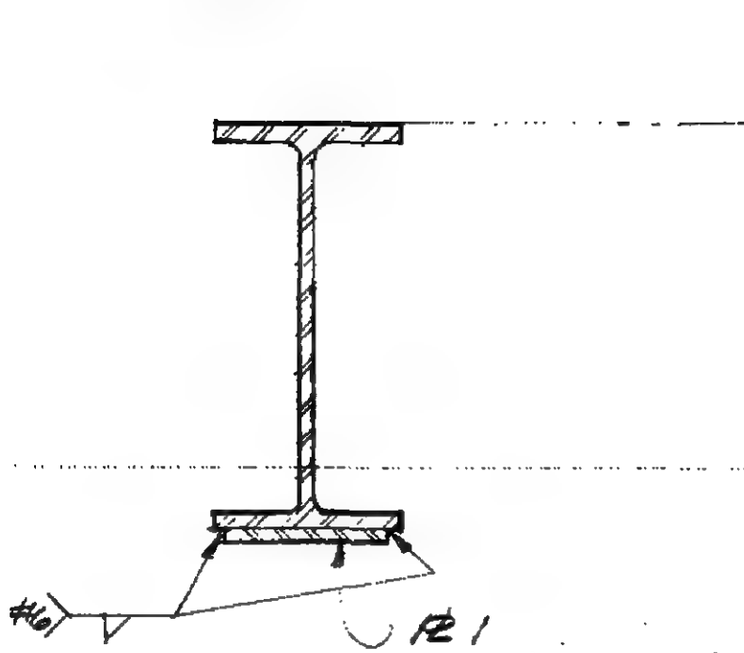


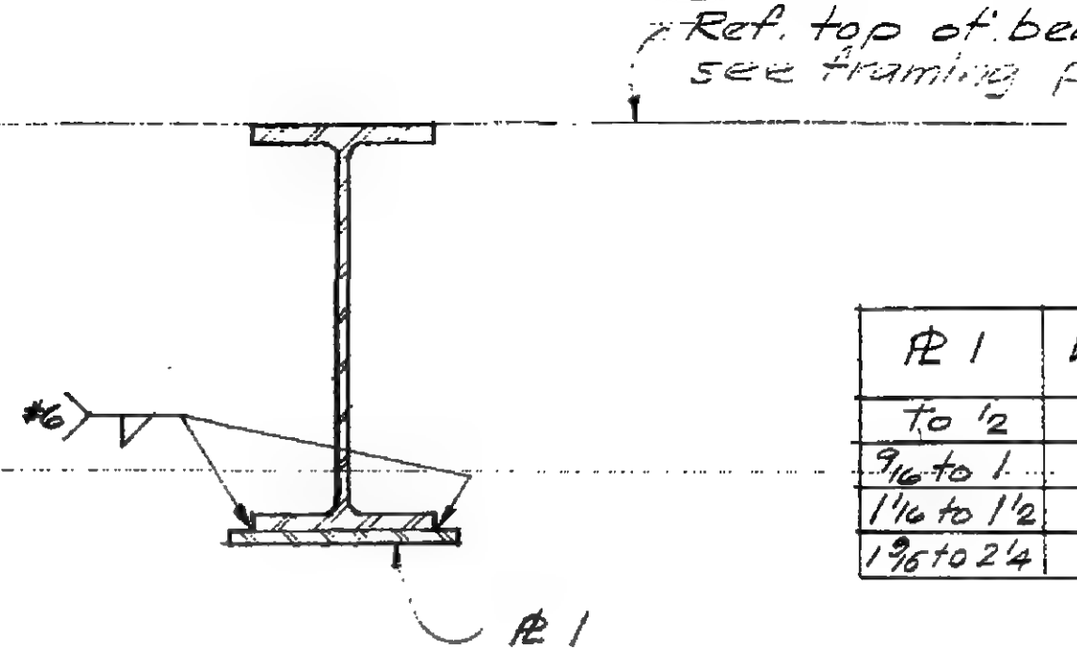


| ℄ 1 | Weld #6 |
|---|---|
| To 1/2 | 1/4 |
| 9/16 to 1 | 5/16 |
| 1 1/16 to 1 1/2 | 3/8 |
| 1 9/16 to 2 1/4 | 7/16 |

## TYPE 400

## TYPE 401

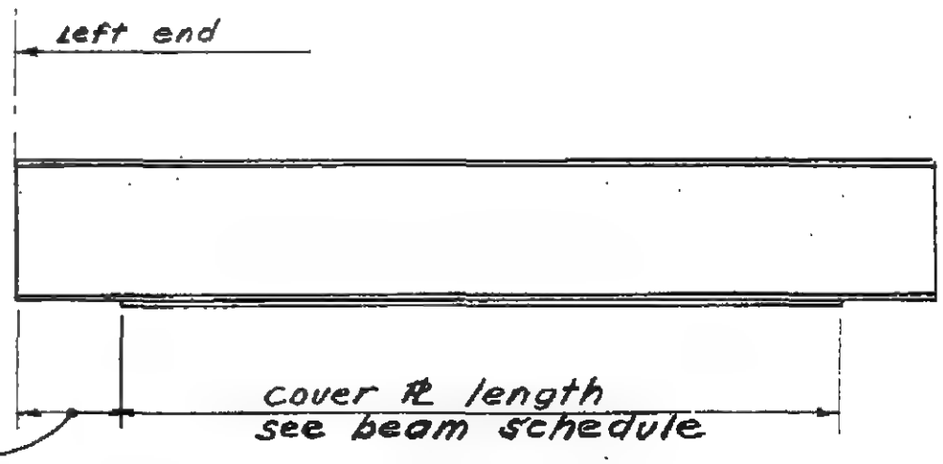


Dimension A - if not given, ℄ 1 is centered on beam.

Note: For beams framing into the exterior wall see 5-AB2-21 for beam elevation.

LICENSED PROFESSIONAL ENGINEER
LESLIE E. ROBERTSON
No. 34360
UNIVERSITY OF THE STATE OF NEW YORK

5-AB2-10

WORTHINGTON, SKILLING, HELLE & JACKSON — Civil & Structural Engineers

PROJECT THE WORLD TRADE CENTER | TITLE BEAM TYPE 402, 405 | DATE 5-1-67

REVISIONS
9-29-67
11-21-67

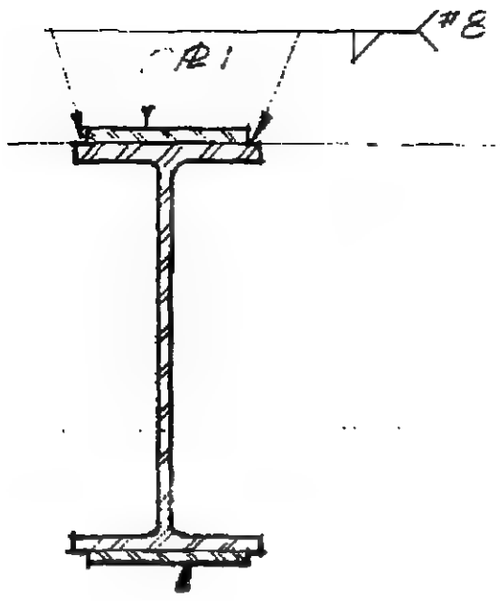


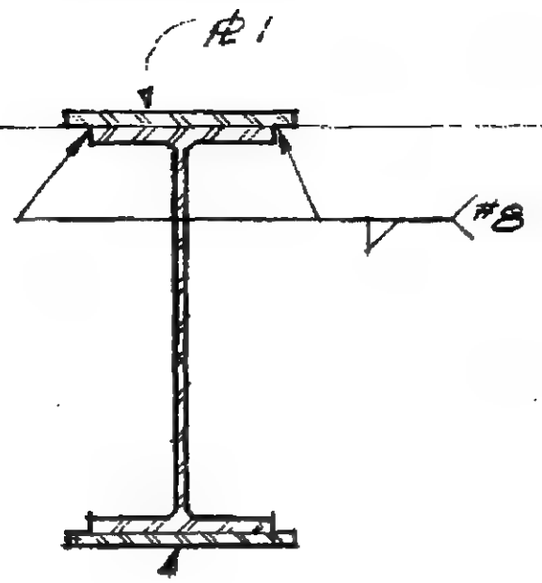


Ref. top of beam
( see framing plans

| ℄ 1 | Weld #8 |
|---|---|
| to 1/2 | 1/4 |
| 9/16 to 1 | 5/16 |
| 1 1/16 to 1 1/2 | 3/8 |
| 1 9/16 to 2 1/4 | 7/16 |

## TYPE 402

## TYPE 405

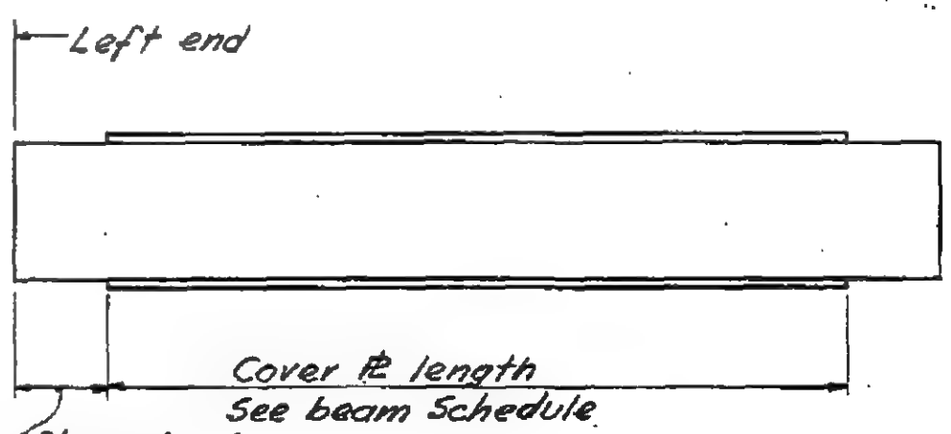


Note: For beams framing into exterior wall See 5-AB2-21 for beam elevation.

LICENSED PROFESSIONAL ENGINEER
LESLIE E. ROBERTSON
No. 24260
STATE OF NEW YORK

SKILLING, HELLE, CHRISTIANSEN, ROBERTSON — Structural & Civil Engineers

PROJECT THE WORLD TRADE CENTER | TITLE BEAM TYPE 402A | DATE 1-10-69

REVISIONS

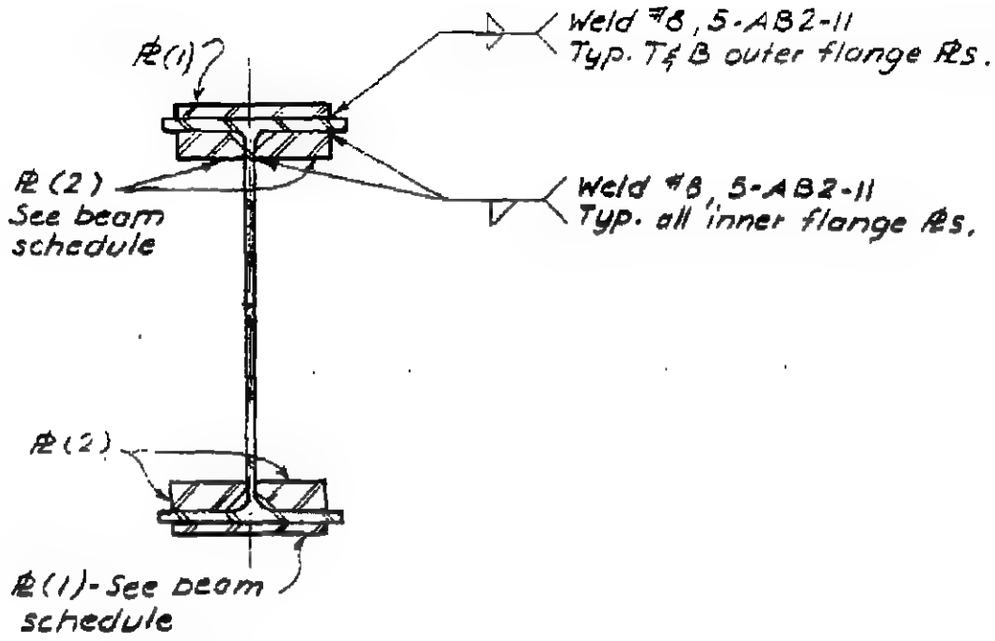


TYPE 402A

LICENSED PROFESSIONAL ENGINEER
LESLIE E. ROBERTSON
No. 94360
UNIVERSITY OF THE STATE OF NEW YORK

ISSUED

DRAWN

REVIEWED

SKILLING – HELLE – CHRISTIANSEN – ROBERTSON  Structural & Civil Engineers

PROJECT THE WORLD TRADE CENTER | TITLE BEAM TYPE 403 & 444 | DATE 6-5-67

REVISIONS

11-21-67

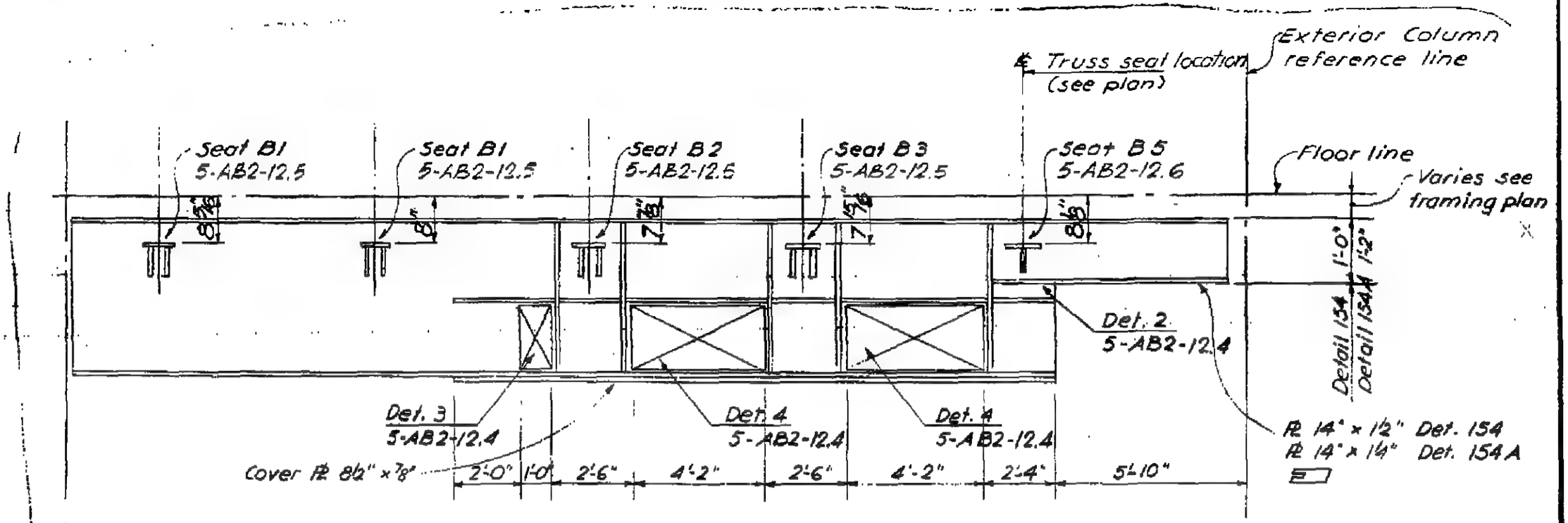


## Beam Type 403

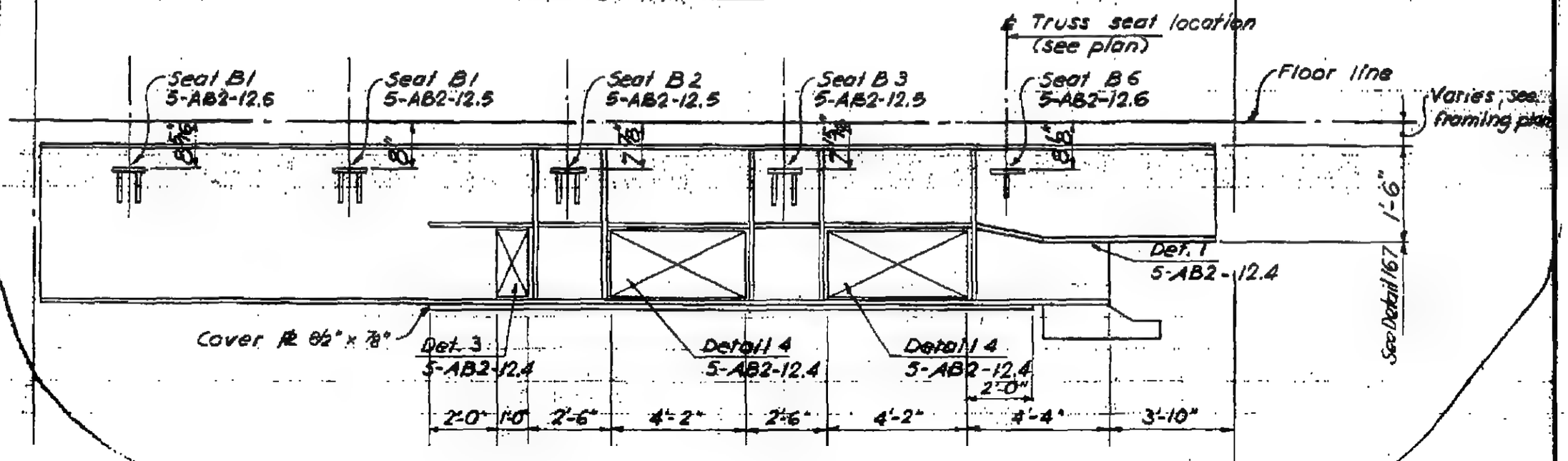


## Beam Type 444

LICENSED PROFESSIONAL ENGINEER LESLIE E. ROBERTSON No. 34360 STATE OF NEW YORK UNIVERSITY OF THE STATE OF NEW YORK

5-AB2-12

SKILLING – HELLE – CHRISTIANSEN – ROBERTSON  Structural & Civil Engineers

PROJECT THE WORLD TRADE CENTER | TITLE BEAM TYPE 441 & 457 | DATE 11-21-67

REVISIONS

12-21-67

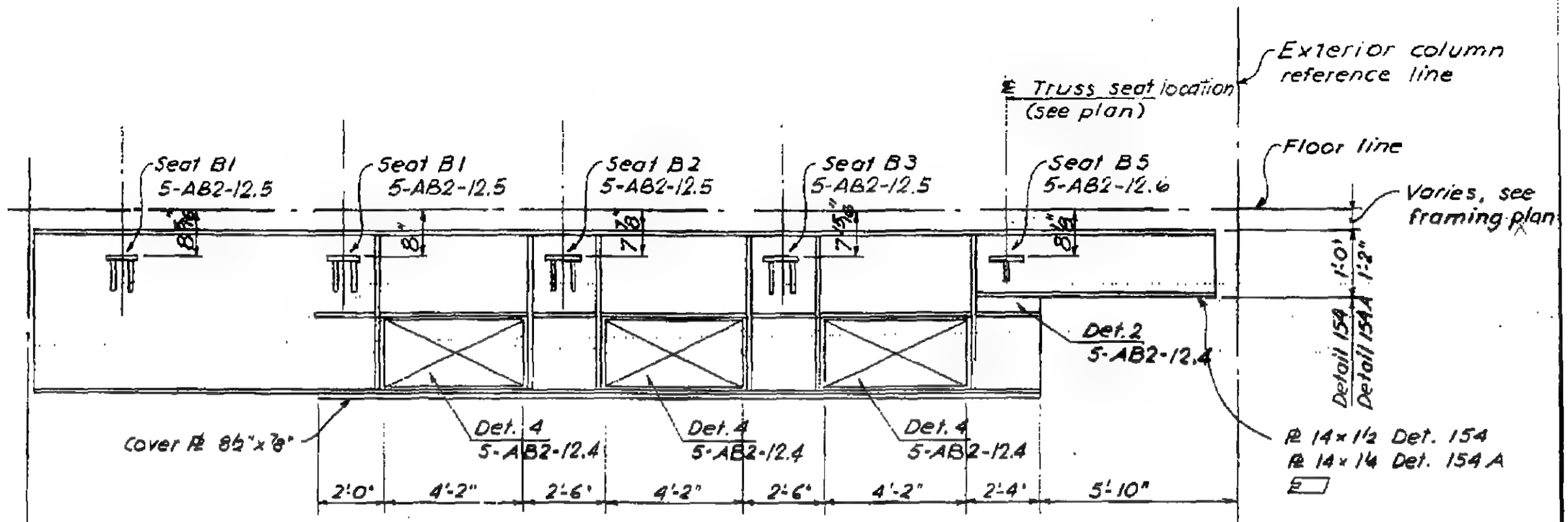


## Beam Type 441

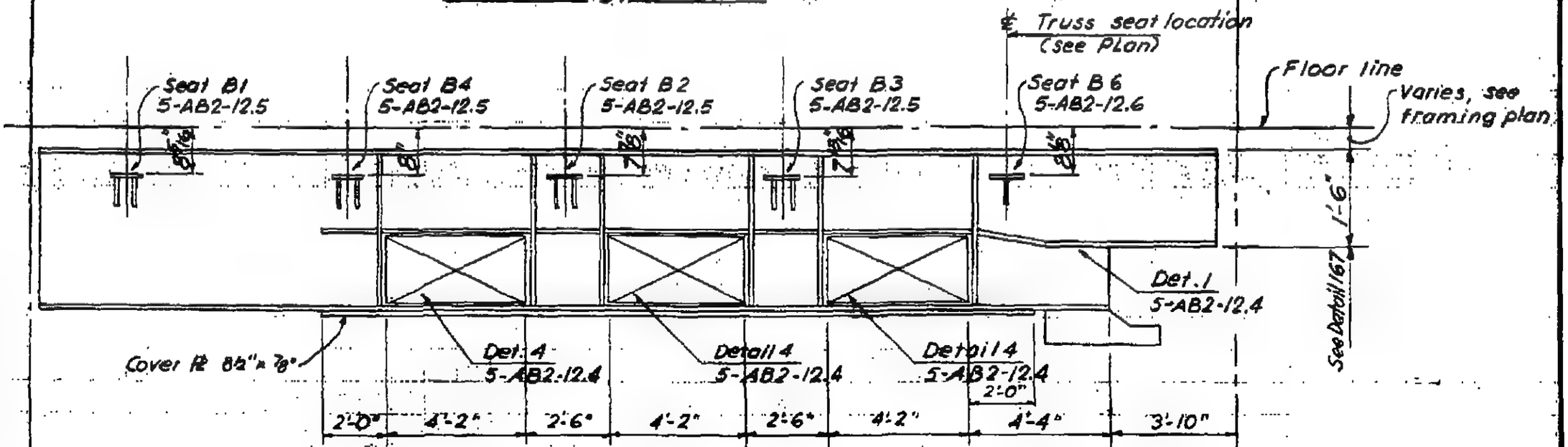


## Beam Type 457

5-AB2-12.1

LICENSED PROFESSIONAL ENGINEER
LESLIE E. ROBERTSON
No. 34360
UNIVERSITY OF THE STATE OF NEW YORK

SKILLING - HELLE - CHRISTIANSEN - ROBERTSON  Structural & Civil Engineers

PROJECT THE WORLD TRADE CENTER | TITLE BEAM TYPE 442 & 448 | DATE 11-21-67

REVISIONS

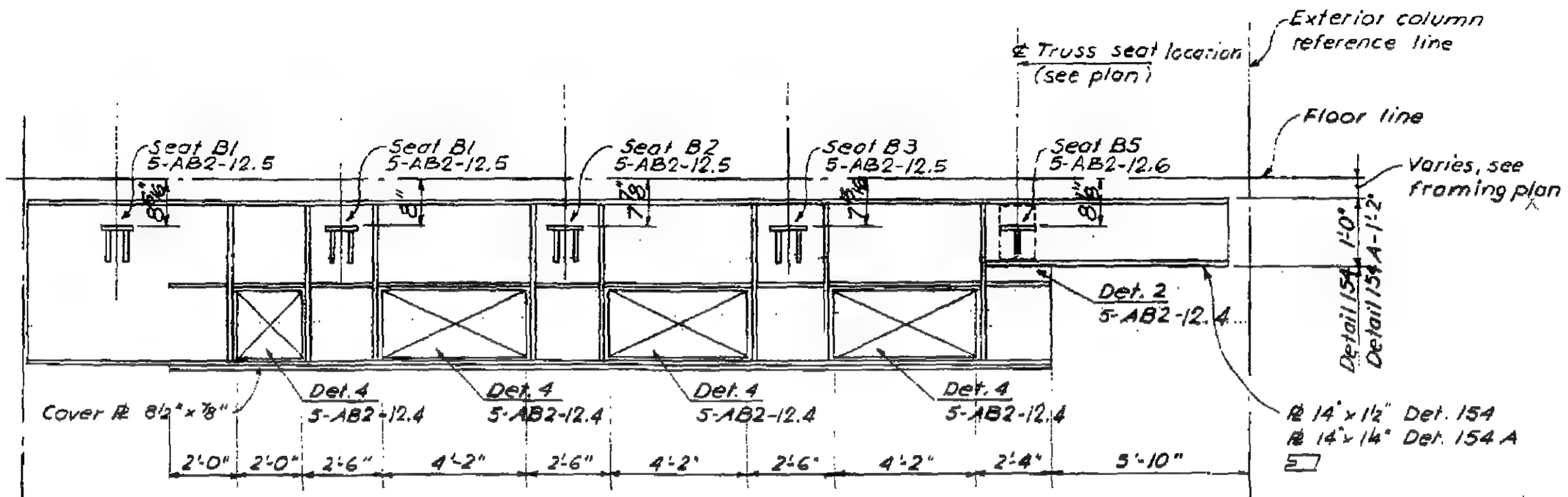


## Beam Type 442

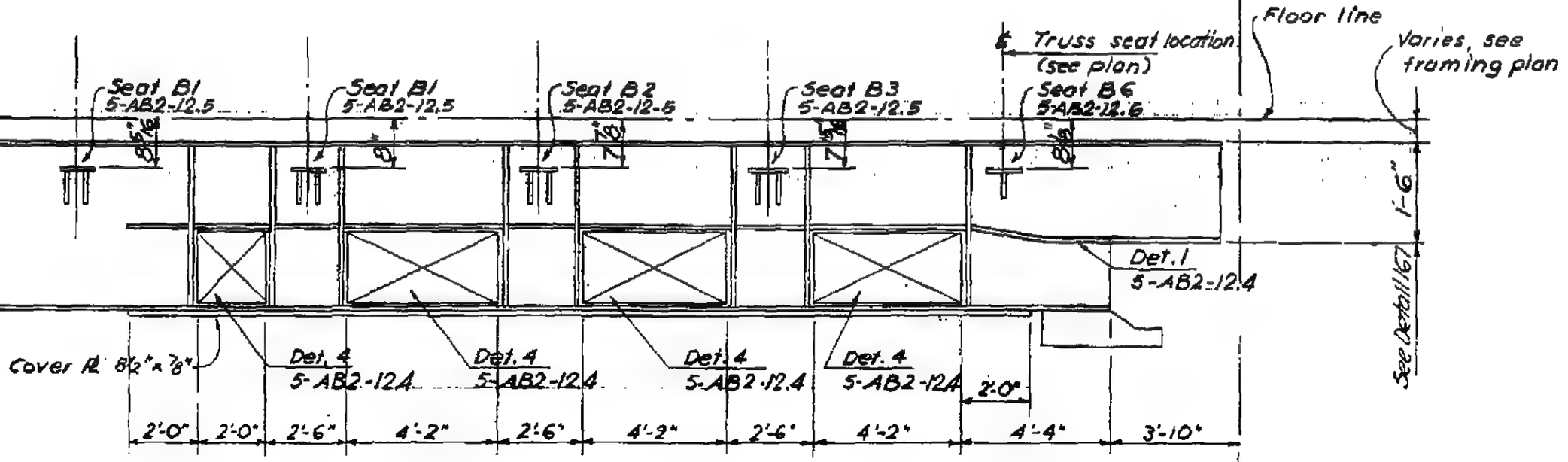


## Beam Type 448

LICENSED PROFESSIONAL ENGINEER
LESLIE E. ROBERTSON
No. 34360
UNIVERSITY OF THE STATE OF NEW YORK

5-AB2-12.2

SKILLING - HELLE - CHRISTIANSEN - ROBERTSON  Structural & Civil Engineers

PROJECT THE WORLD TRADE CENTER | TITLE BEAM TYPE 443 & 447 | DATE 11-21-67

REVISIONS
11-22-68

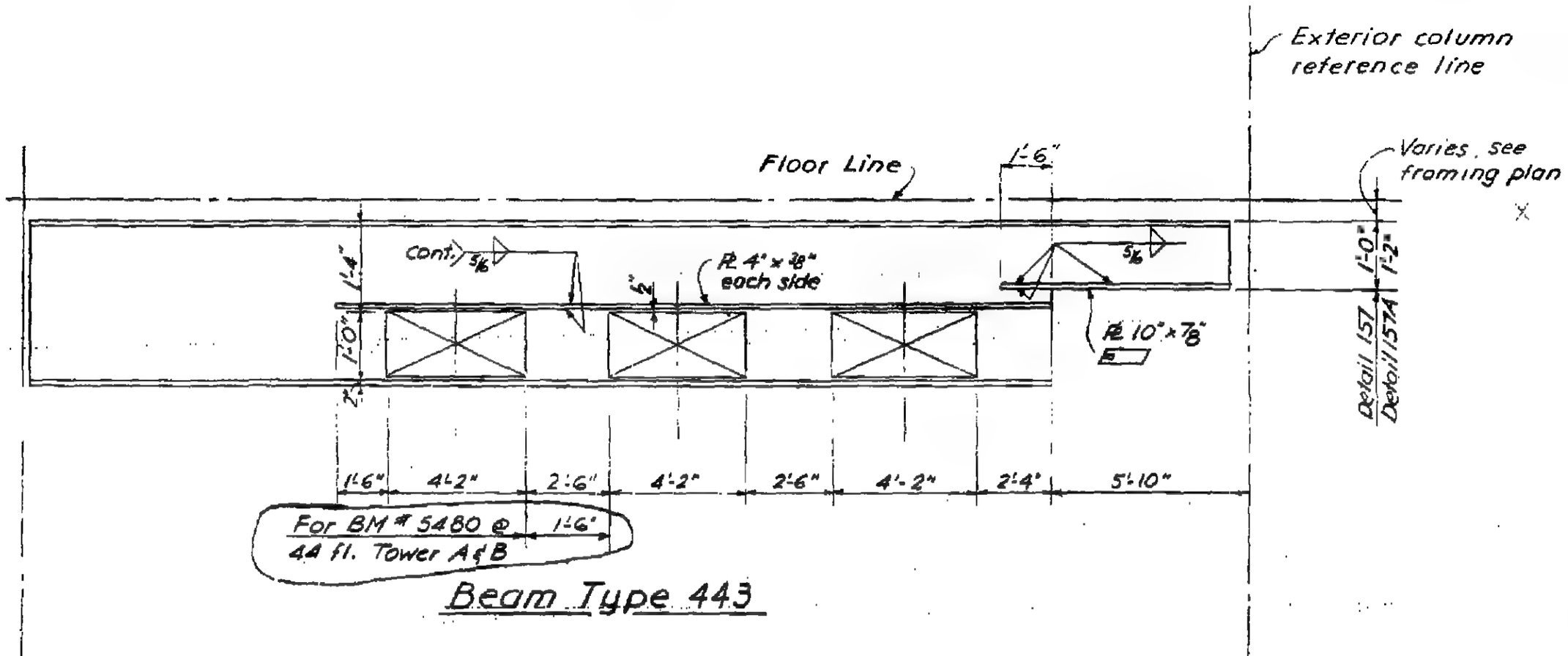


Beam Type 443

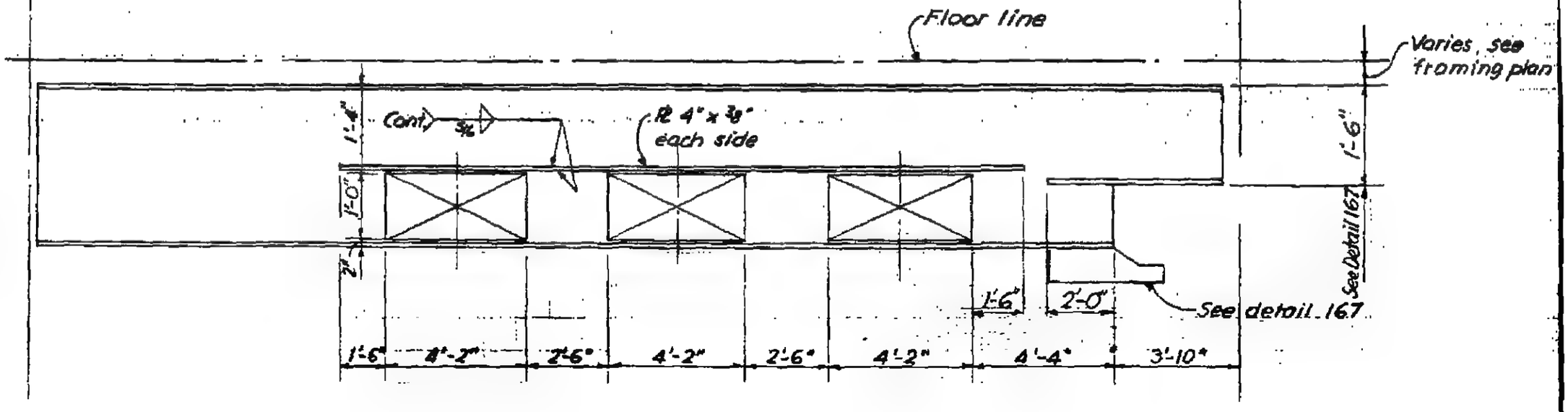


Beam Type 447

LICENSED PROFESSIONAL ENGINEER
LESLIE E. ROBERTSON
No. 34360
STATE OF NEW YORK

SKILLING -- HELLE - CHRISTIANSEN - ROBERTSON — Structural & Civil Engineers

PROJECT THE WORLD TRADE CENTER | TITLE DETAILS 1, 2, 3, 4 | DATE 11-21-67

REVISIONS

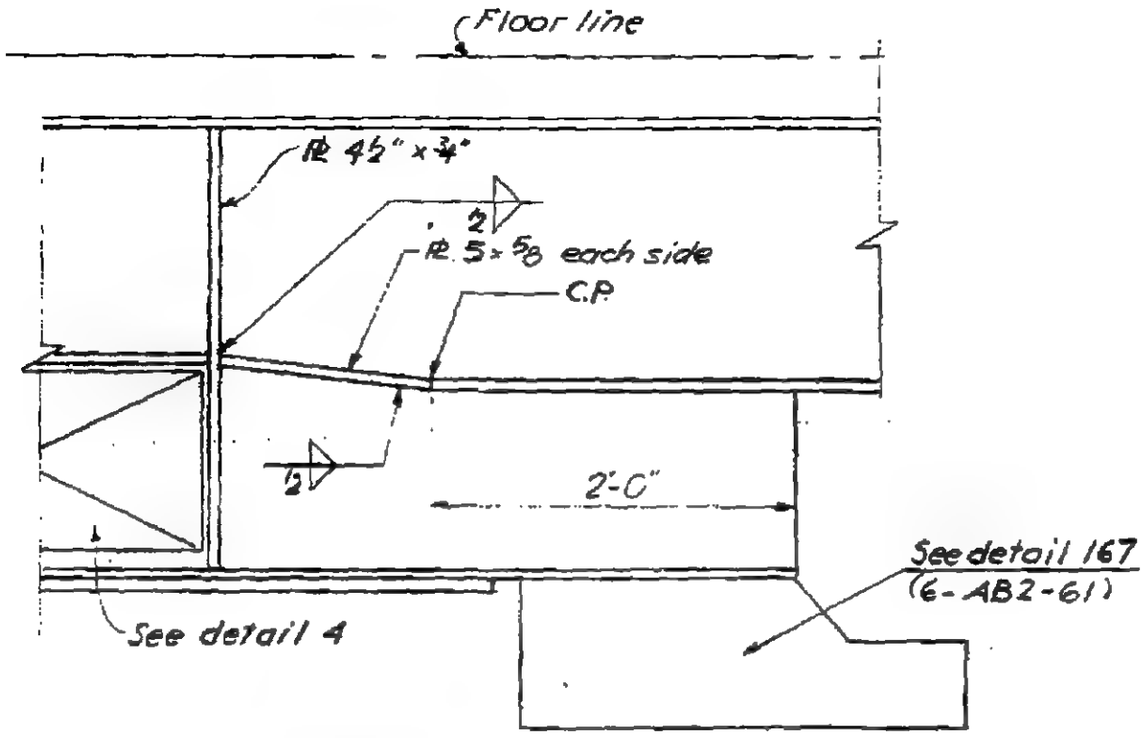


Detail 1

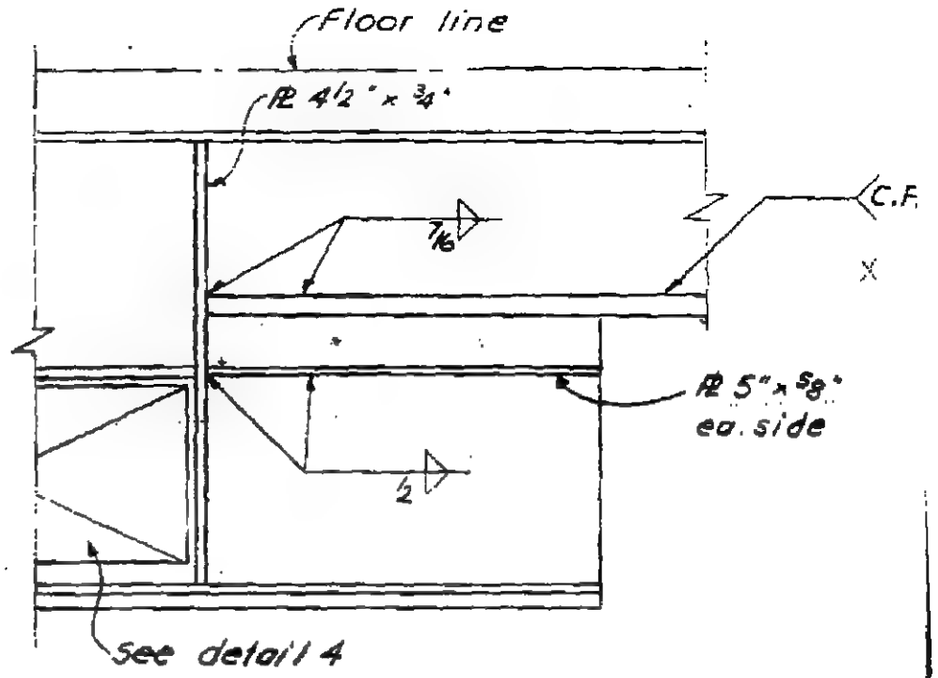


Detail 2

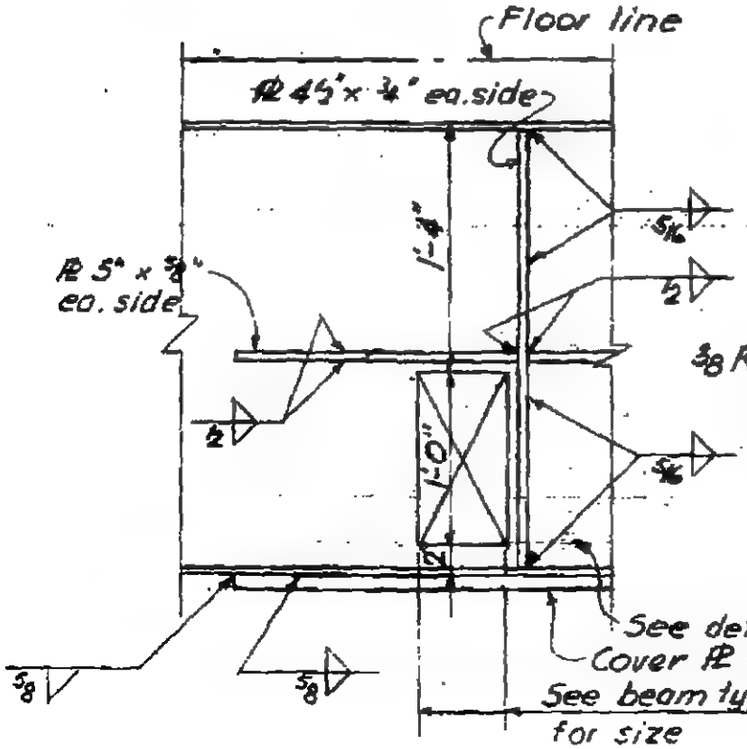


Detail 3

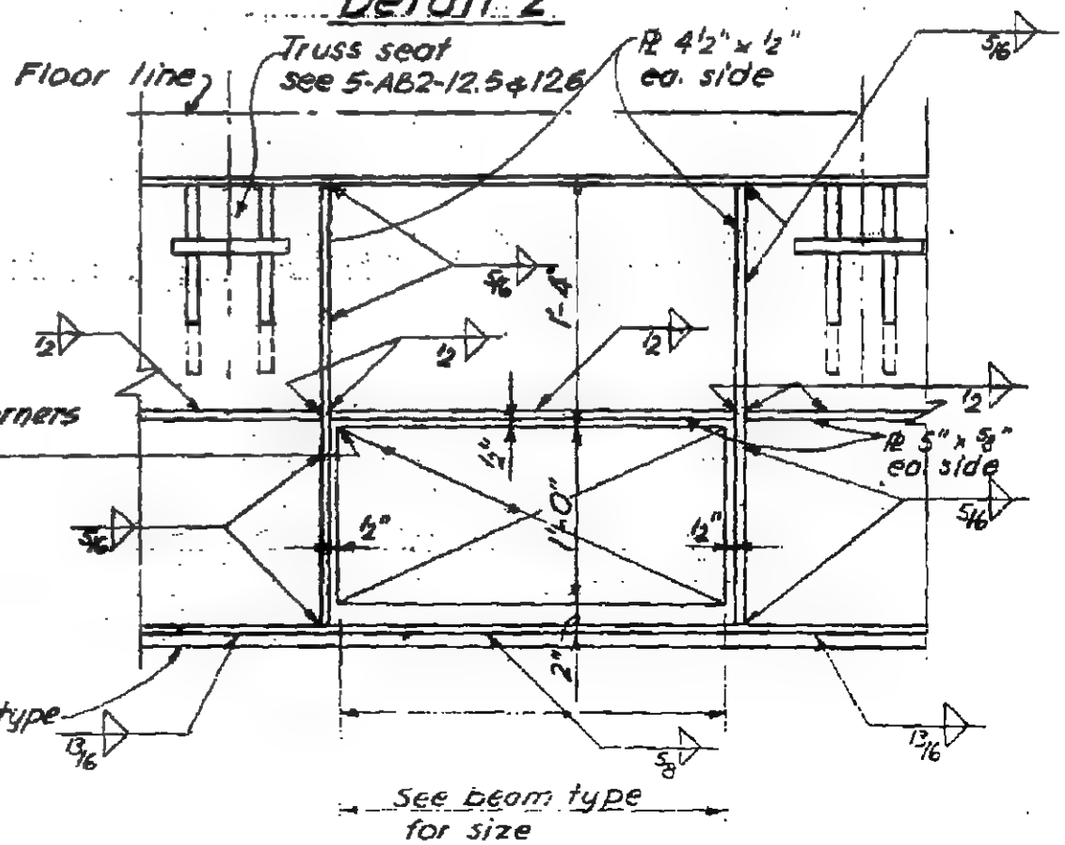


Detail 4

LICENSED PROFESSIONAL ENGINEER LESLIE E. ROBERTSON No. 34360 UNIVERSITY OF THE STATE OF NEW YORK

5-AB2-19a

SKILLING - HELLE - CHRISTIANSEN - ROBERTSON  Structural & Civil Engineers

PROJECT THE WORLD TRADE CENTER | TITLE TRUSS SEAT DETAILS B1, B2, B3, B4 | DATE 11-21-67

REVISIONS

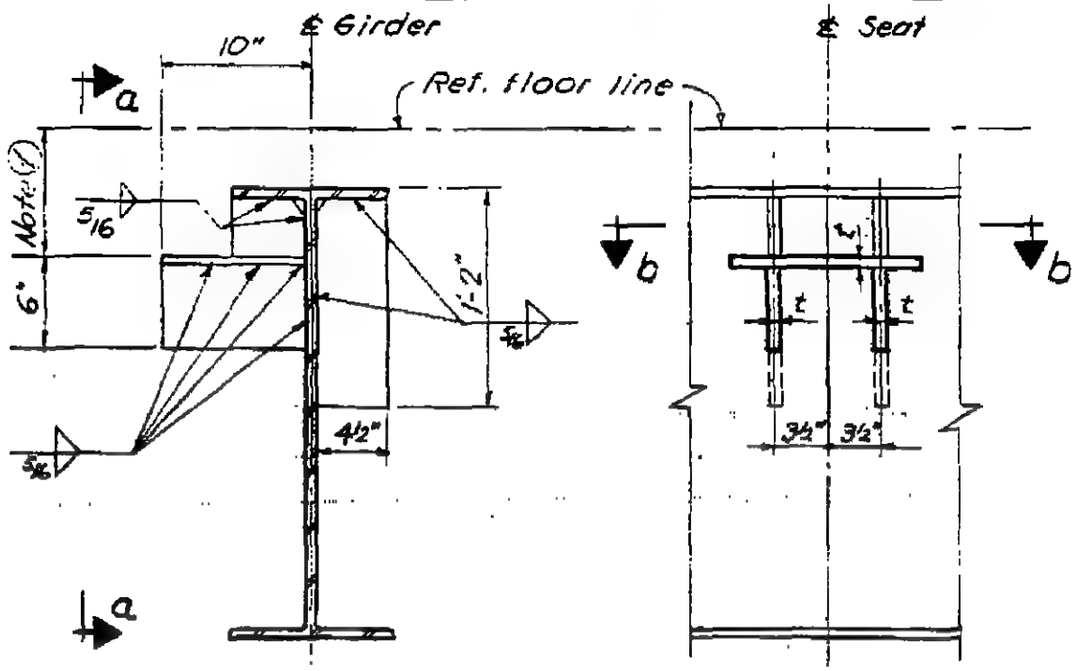


Section a-a




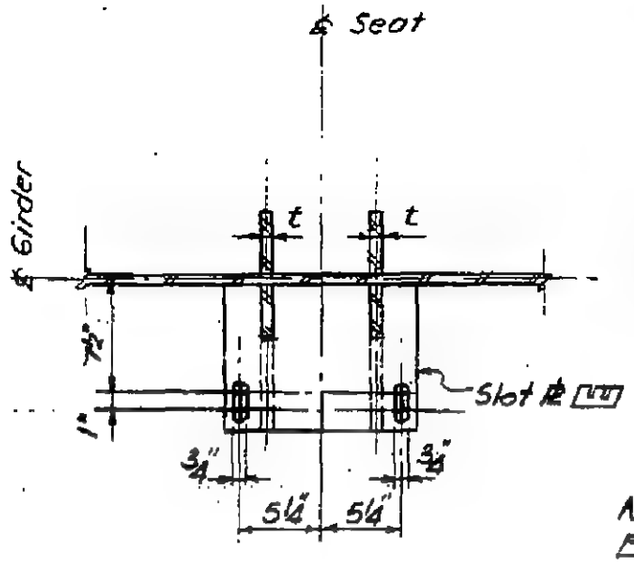


| SCHEDULE | | |
|---|---|---|
| | | t |
| B1 | | ⅞" |
| B2 | | ¾" |
| B3 | | ⅝" |
| | | |

Note (1) See Beam Elevation 5-AB2-12. 12.1, 12.2, 12.3

Section b-b

## Seat Details B1, B2, B3

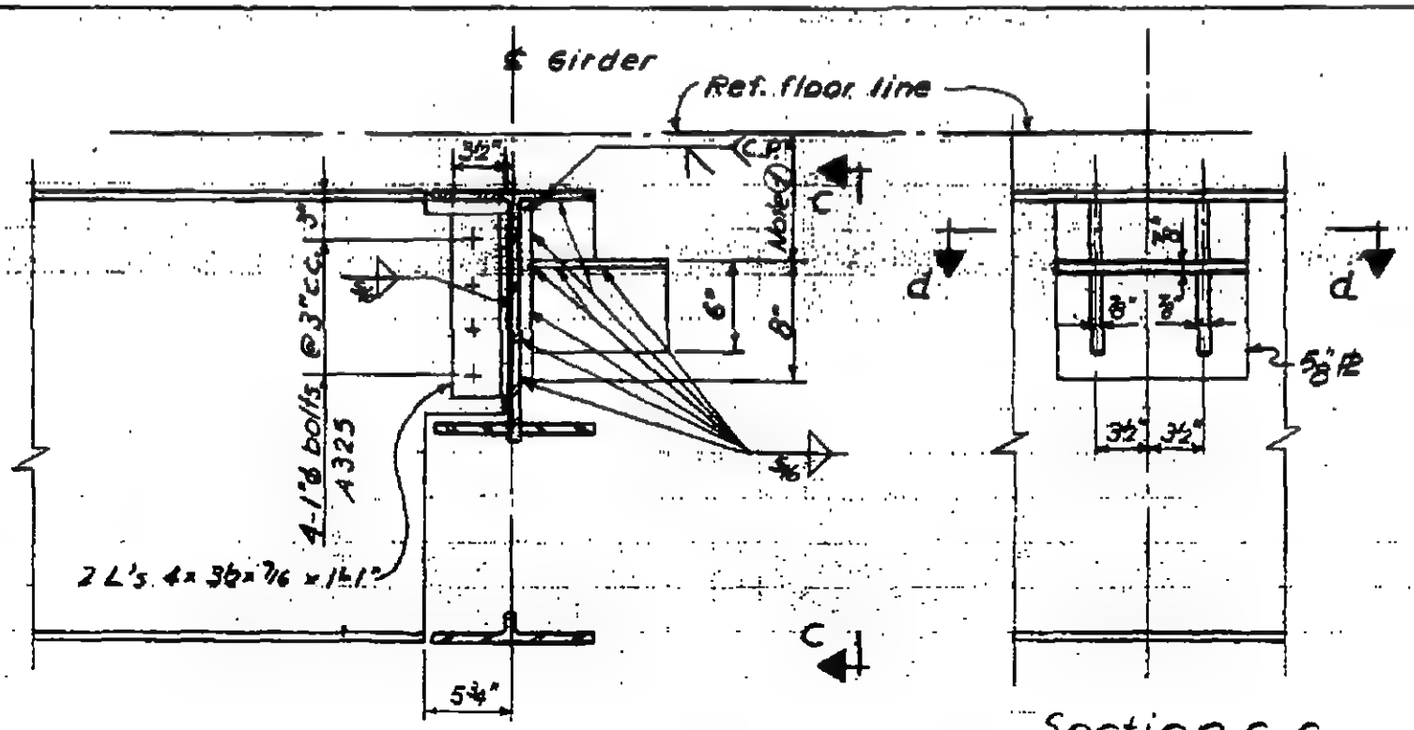


Section c-c

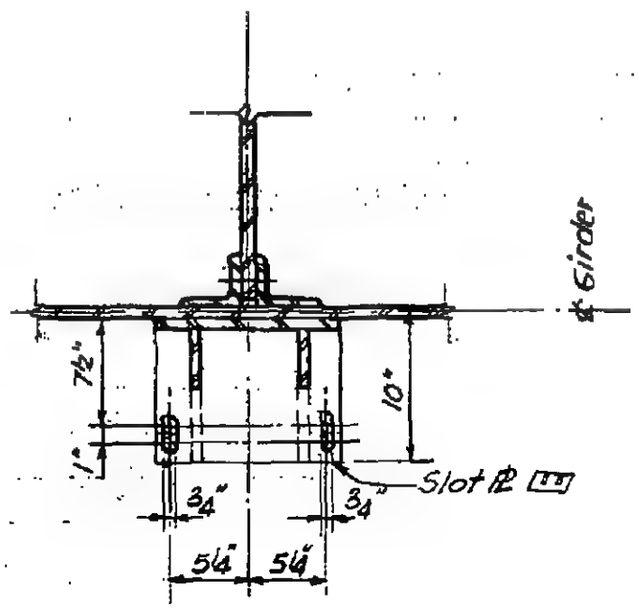


Section d-d

## Seat Detail B4

5-AB2-12.5

LICENSED PROFESSIONAL ENGINEER
LESLIE E. ROBERTSON
No. 34360
UNIVERSITY OF THE STATE OF NEW YORK

SKILLING - HELLE - CHRISTIANSEN ~ ROBERTSON — Structural & Civil Engineers

PROJECT THE WORLD TRADE CENTER | TITLE TRUSS SEAT DETAILS B5, B6 | DATE 11-21-67

REVISIONS

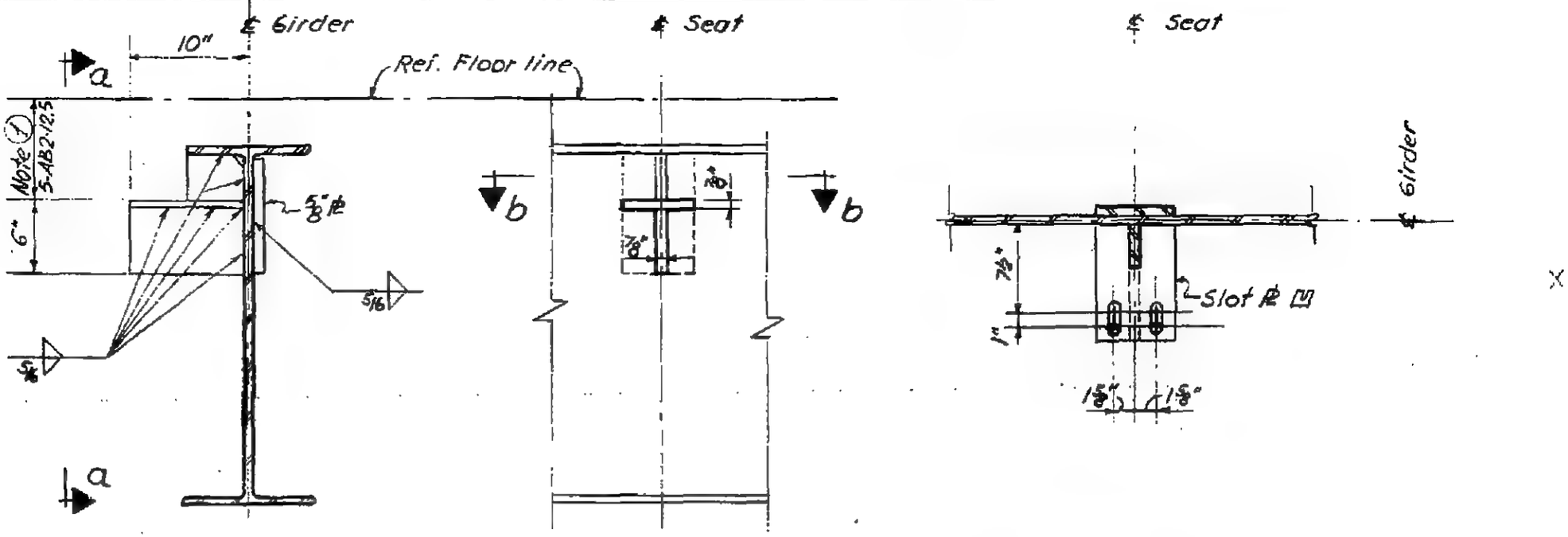


Section a-a — Section b-b

Seat Detail B5

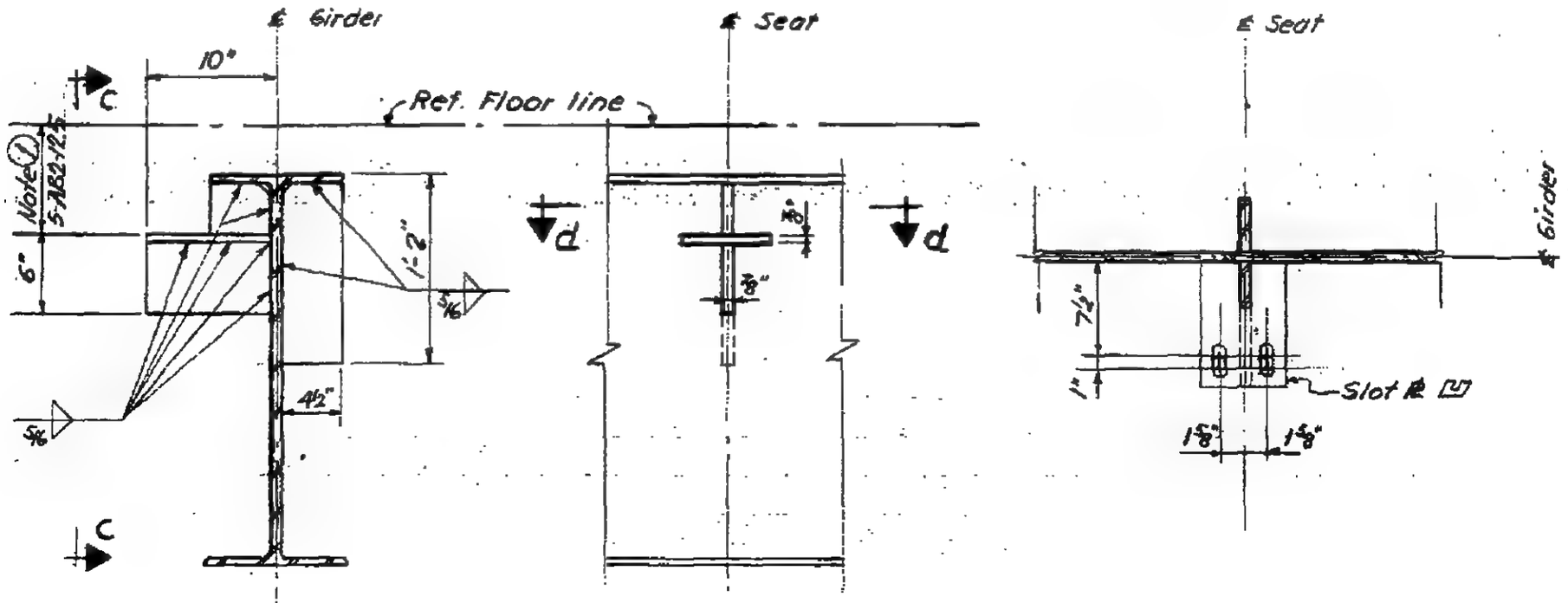


Section c-c — Section d-d

Seat Detail B6

5-AB2-12.6

LICENSED PROFESSIONAL ENGINEER
LESLIE E. ROBERTSON
No. 34360
UNIVERSITY OF THE STATE OF NEW

WORTHINGTON, SKILLING, HELLE & JACKSON — Civil & Structural Engineers

PROJECT THE WORLD TRADE CENTER | TITLE BEAM TYPE 404, 425 | DATE 5-1-67

REVISIONS
8-8-67
11-9-67
12-21-67

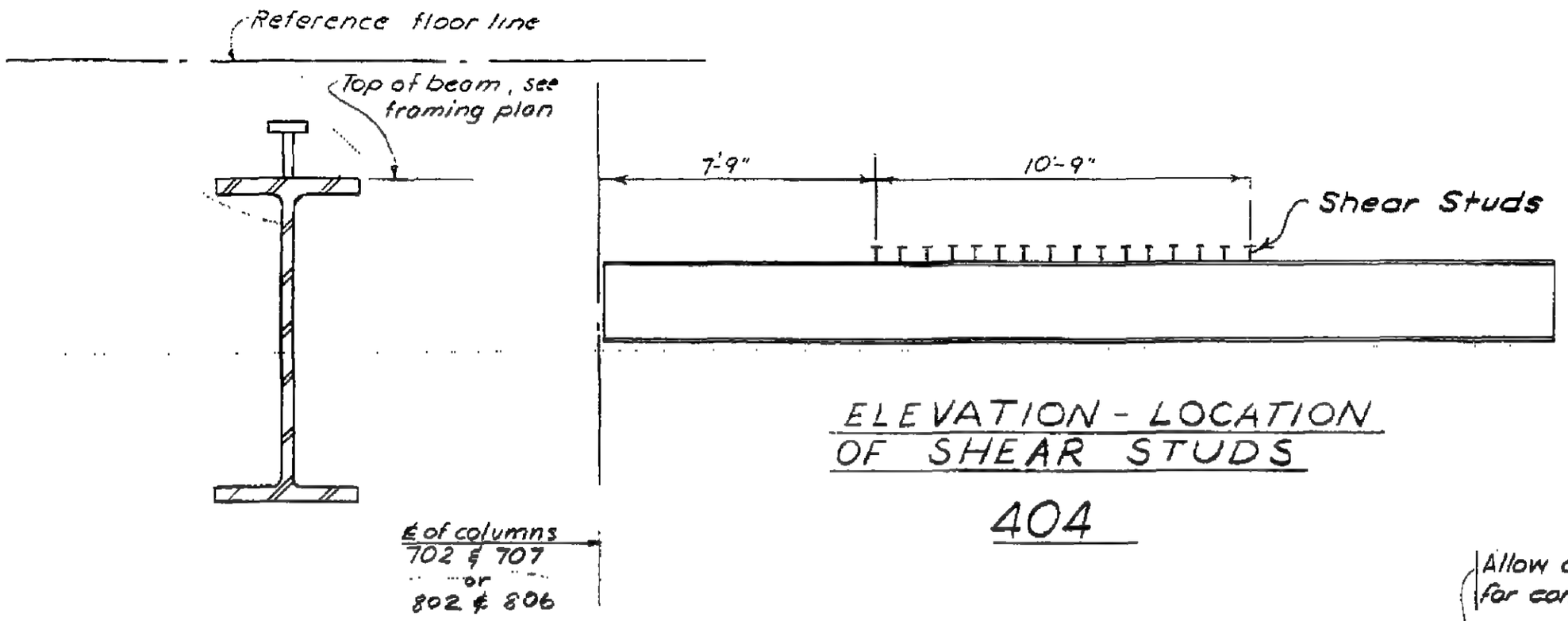


ELEVATION - LOCATION OF SHEAR STUDS

404

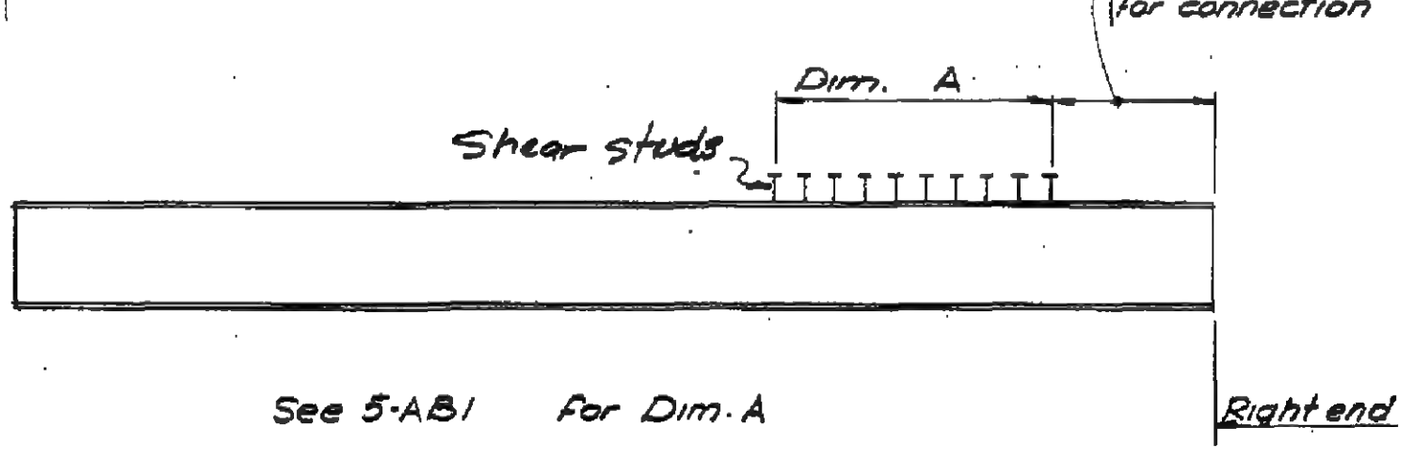


425

LICENSED PROFESSIONAL ENGINEER
LESLIE E. ROBERTSON
No. 34360
UNIVERSITY OF THE STATE OF NEW YORK

5-AB2-13

WORTHINGTON, SKILLING, HELLE & JACKSON — Civil & Structural Engineers

PROJECT THE WORLD TRADE CENTER | TITLE BEAM TYPE 500 & 507 | DATE 6-5-67

REVISIONS
9-15-67
11-10-67

Note: Where cover plate (PL1) is indicated and dim. A is not given, cover plate (PL1) is centered on beam ℄ right support

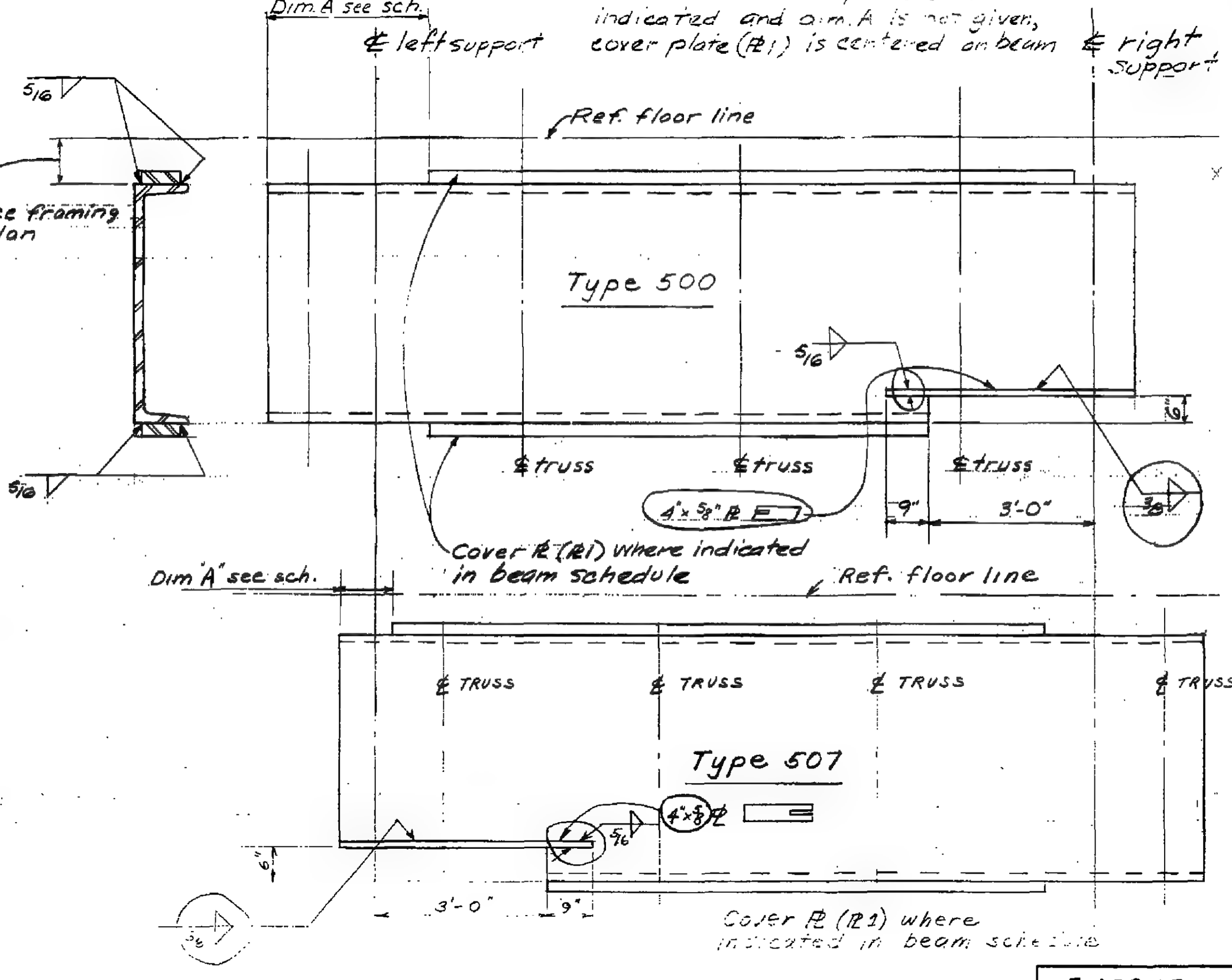


LICENSED PROFESSIONAL ENGINEER — LESLIE E. ROBERTSON — No. 34360 — UNIVERSITY OF THE STATE OF NEW YORK

5-AB2-15

WORTHINGTON, SKILLING, HELLE & JACKSON · Civil & Structural Engineers

PROJECT THE WORLD TRADE CENTER | TITLE BEAM TYPE 501, 508, 516 | DATE 5-1-67

REVISIONS
11-21-67

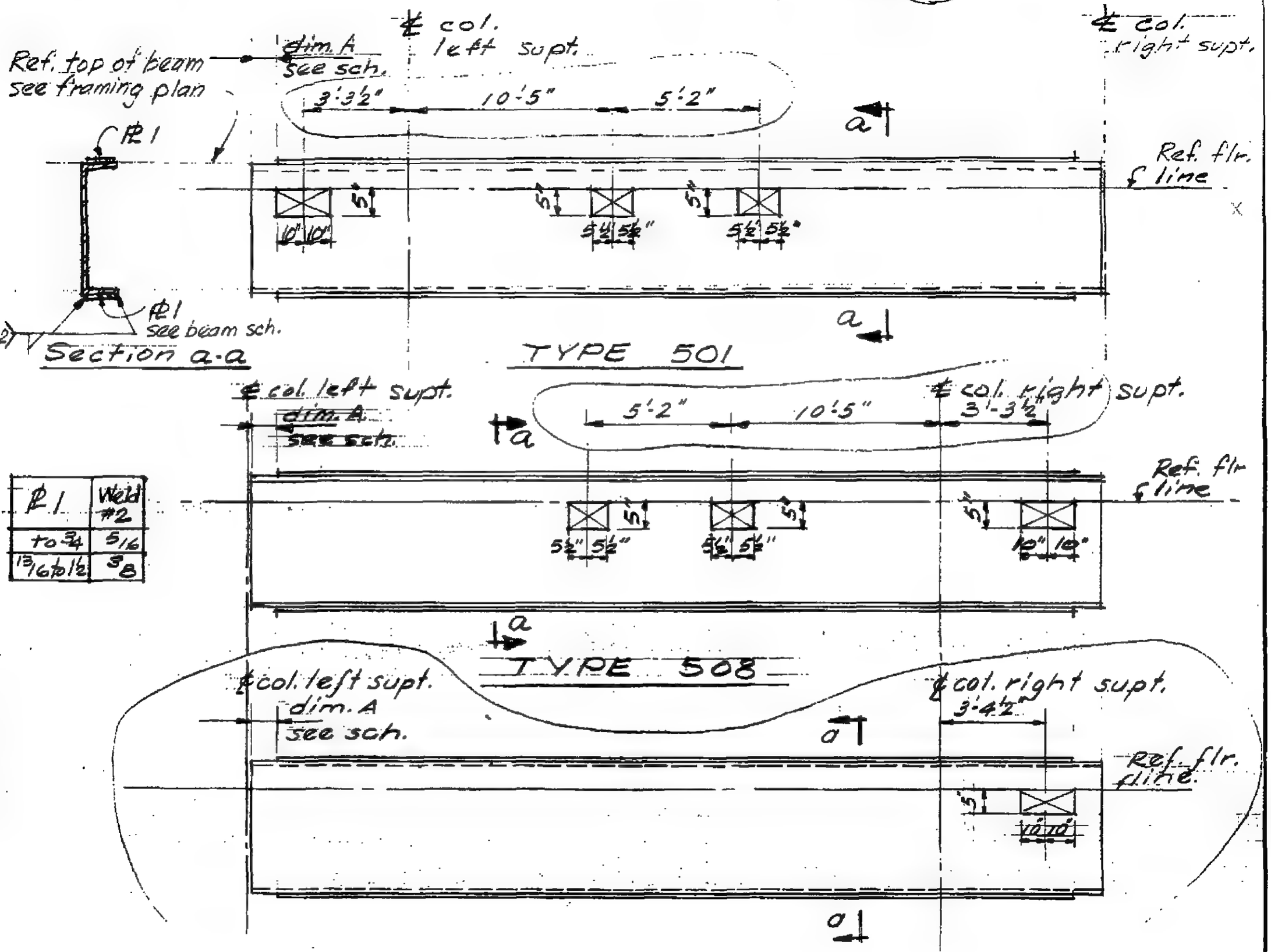


| #1 | Weld #2 |
|---|---|
| to ¾ | 5/16 |
| 13/16 to 1½ | 3/8 |

LICENSED PROFESSIONAL ENGINEER
LESLIE E. ROBERTSON
No. 34360
OF THE STATE OF NEW YORK

5-AB2-16

WORTHINGTON, SKILLING, HELLE & JACKSON — Civil & Structural Engineers

PROJECT THE WORLD TRADE CENTER | TITLE BEAM TYPE 502, 509, 511 & 514 | DATE 5-1-67

REVISIONS
6-5-67
11-21-67

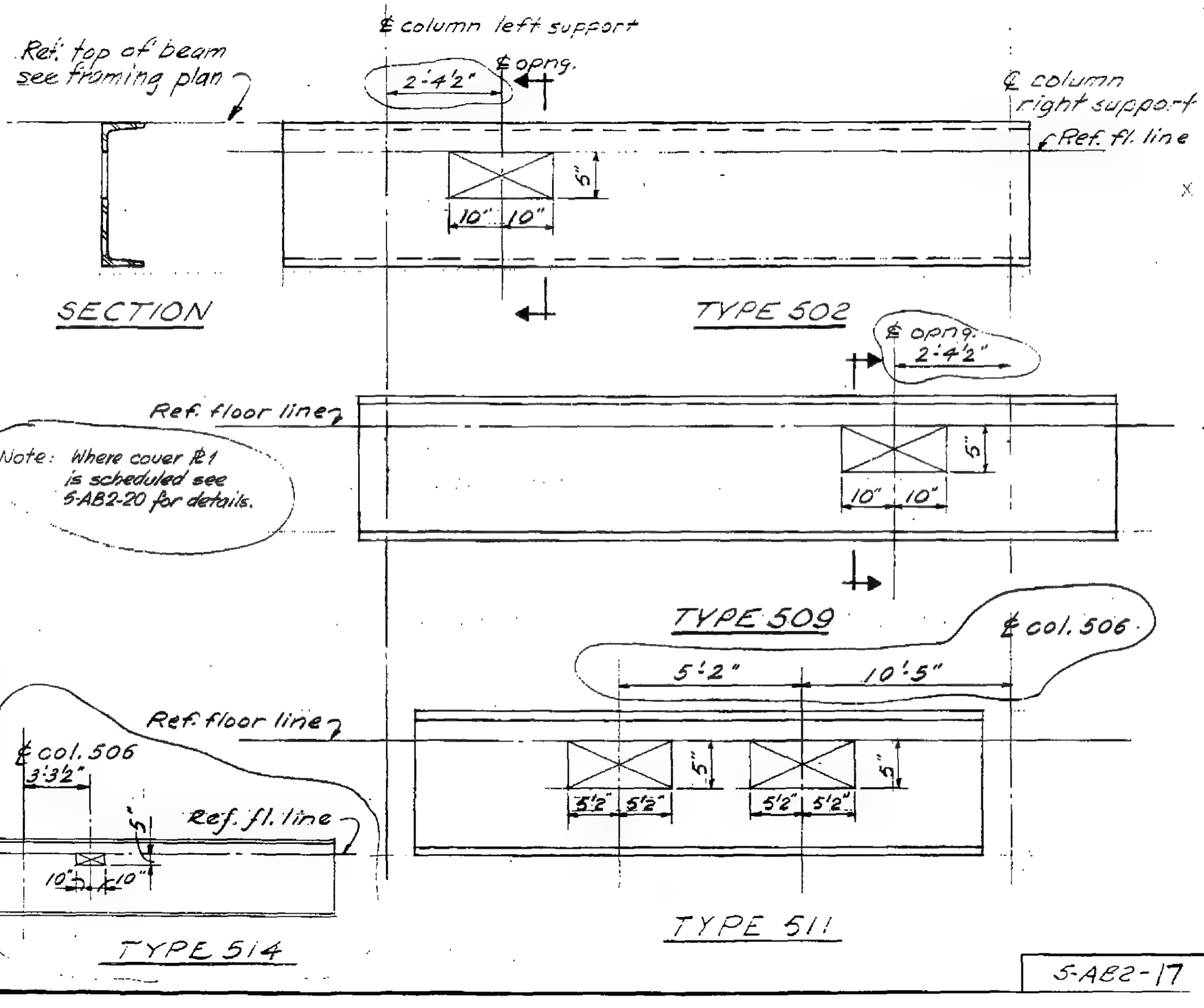


LICENSED PROFESSIONAL ENGINEER LESLIE E. ROBERTSON No. 84360 STATE OF NEW YORK

S-AB2-17

WORTHINGTON, SKILLING, HELLE & JACKSON — Civil & Structural Engineers

PROJECT THE WORLD TRADE CENTER | TITLE BEAM TYPE 503 & 510 | DATE 5-1-67

REVISIONS
6-5-67
11-21-67

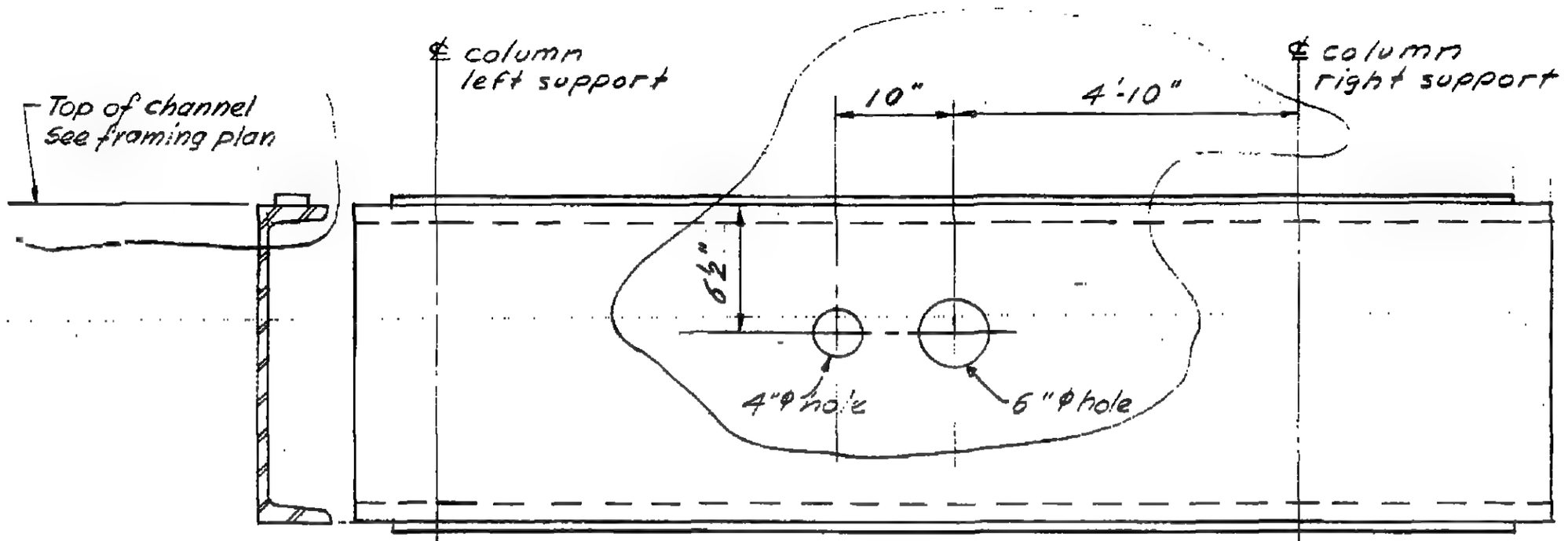


TYPE 503

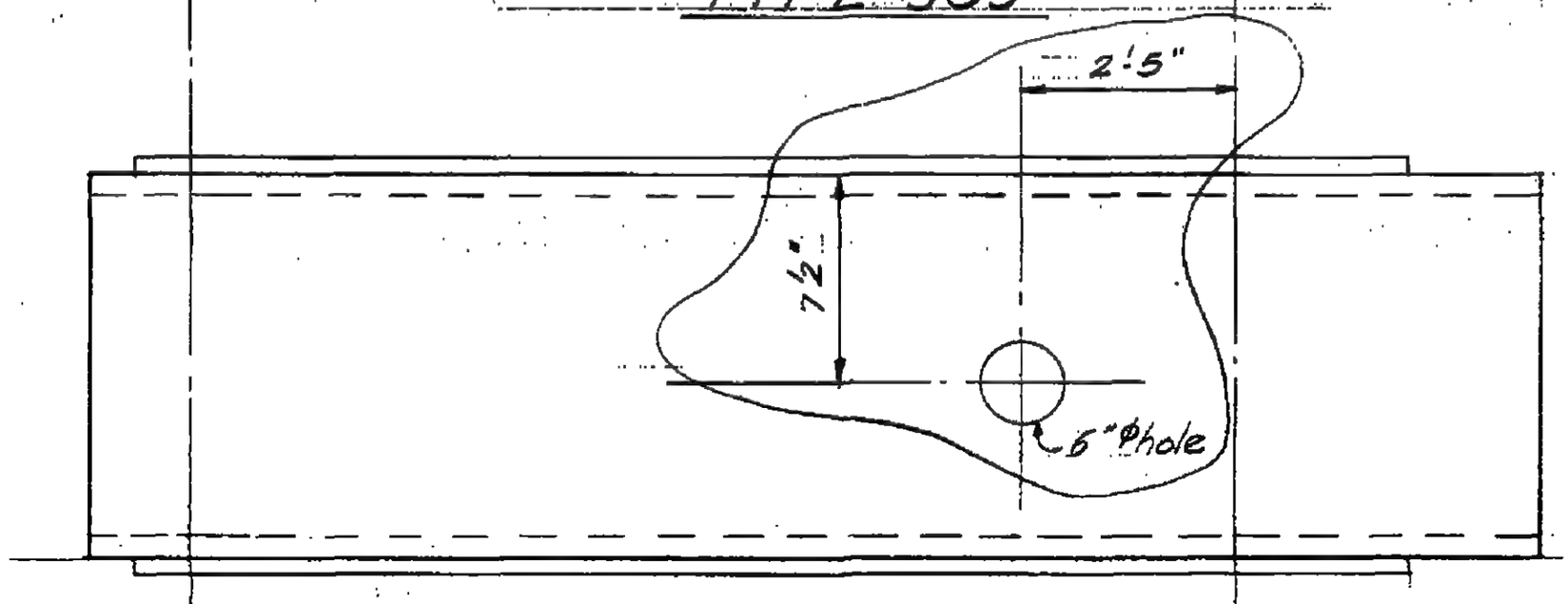


Note:
For details not shown see detail 505 (5-AB2-20)

TYPE 510

LESLIE E. ROBERTSON REGISTERED PROFESSIONAL ENGINEER No. 24360 STATE OF NEW YORK

5-AB2-18

WORTHINGTON, SKILLING, HELLE & JACKSON — Civil & Structural Engineers

PROJECT THE WORLD TRADE CENTER | TITLE BEAM. TYPE 504 & 515 | DATE 5-1-67

REVISIONS
11-21-67

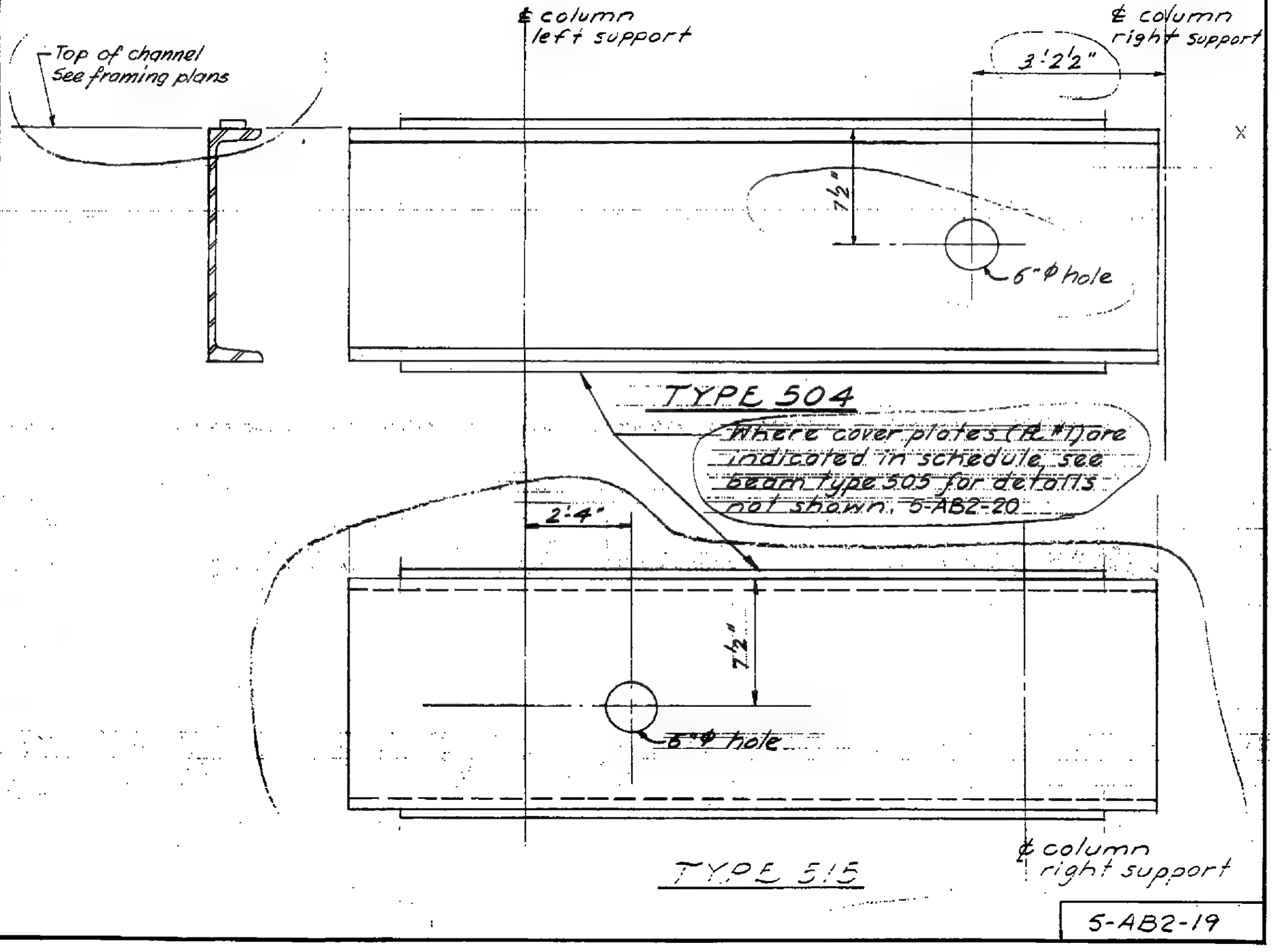


LICENSED PROFESSIONAL ENGINEER
LESLIE E. ROBERTSON
No. 34860
STATE OF NEW YORK

5-AB2-19

WORTHINGTON, SKILLING, HELLE & JACKSON — Civil & Structural Engineers

PROJECT THE WORLD TRADE CENTER | TITLE BEAM TYPE 505 | DATE 5-1-67

REVISIONS

6-5-67
9-15-67

Note:
Where cover plate (℄1) is indicated and dim.A is not given, cover plate(℄1) is centered on beam.

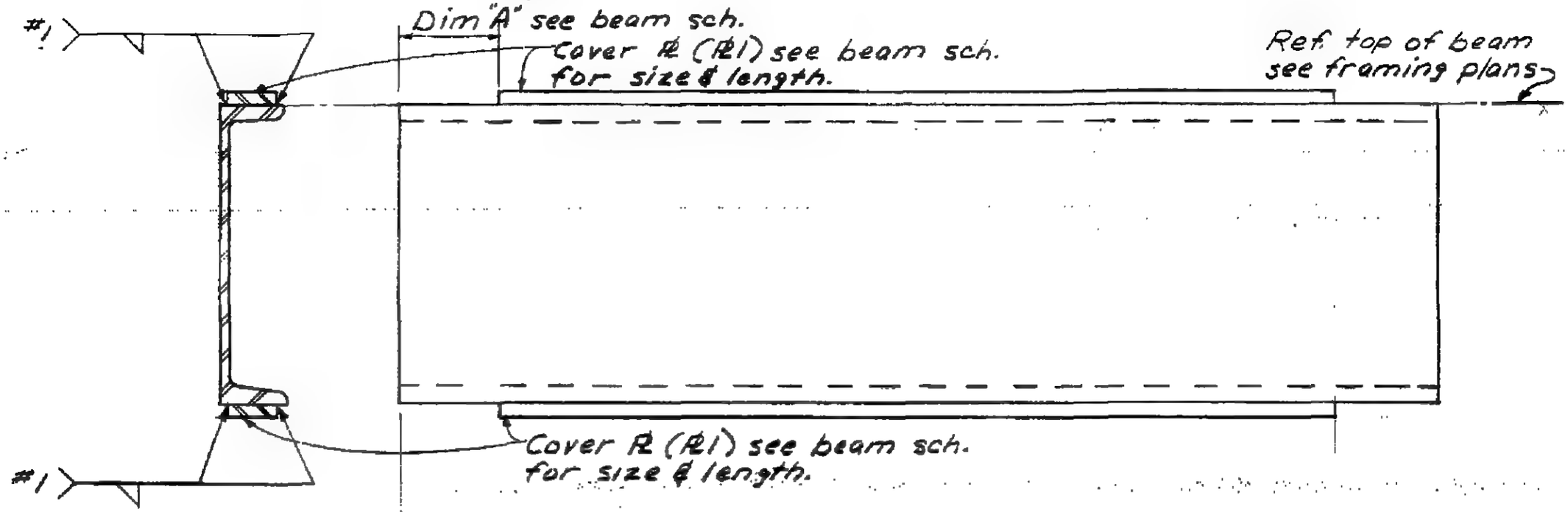


| ℄1 | Weld #1 |
|---|---|
| to 1/2" | 4" |
| 9/16" to 1" | 5/16" |
| 1 1/16" to 1 1/2" | 3/8" |

LESLIE E. ROBERTSON — LICENSED PROFESSIONAL ENGINEER — No. 34160 — STATE OF NEW YORK

5-AB2-20

SKILLING - HELLE - CHRISTIANSEN - ROBERTSON  Structural & Civil Engineers

PROJECT THE WORLD TRADE CENTER | TITLE BEAM ELEVATION TYPE 400, 401, 402, 405 | DATE 5-21-67

REVISIONS

6-5-67
9-29-67
11-21-67

Note 1 Where cover plate (Pt 1) is indicated and dim. "A" is not given, cover plate (Pt 1) is centered on beam.

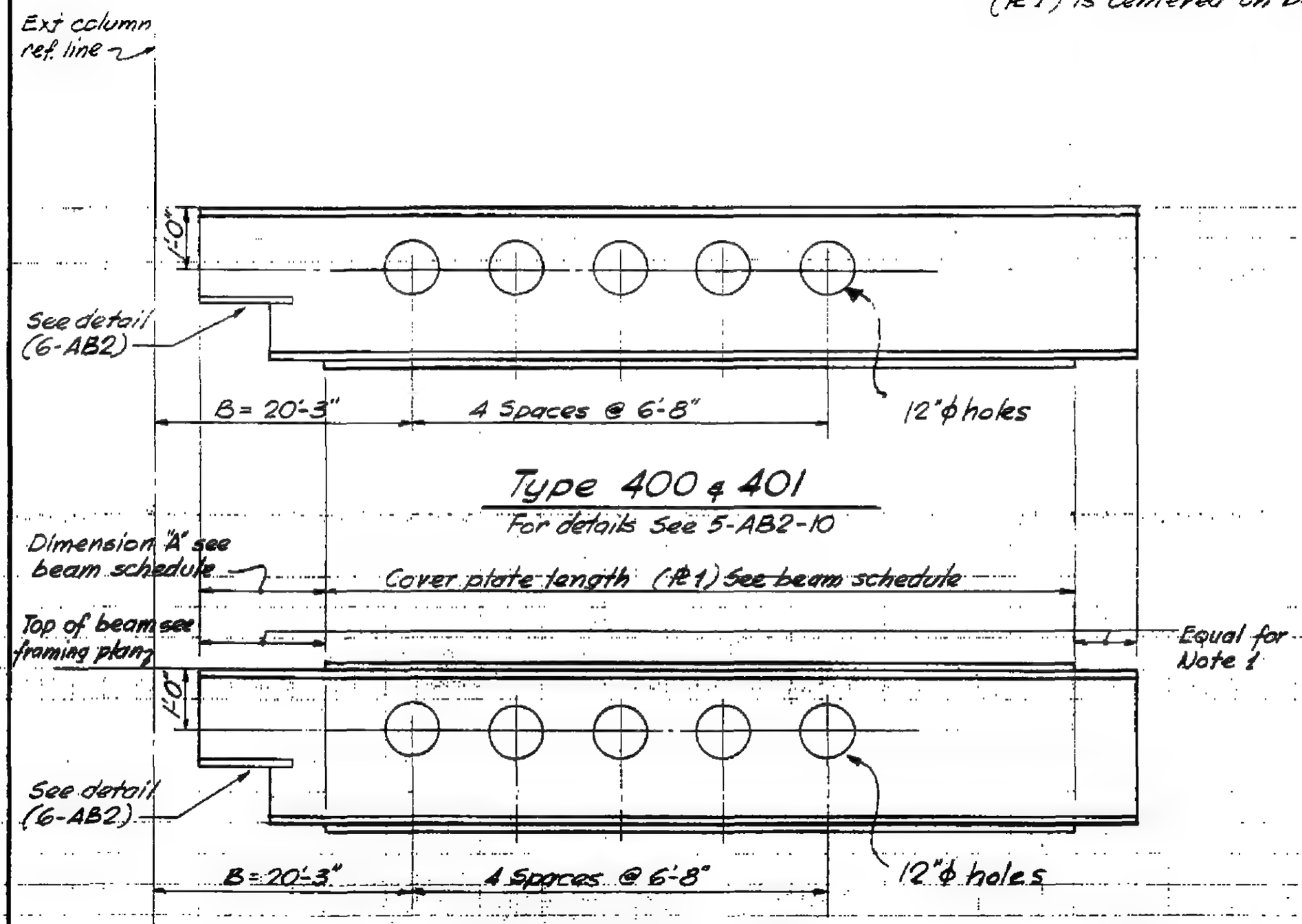


Type 400 & 401

For details See 5-AB2-10




Type 402 & 405

For details See 5-AB2-11

Note: Holes occur only where "B" dim. is scheduled

5-AB2-21

SKILLING - HELLE - CHRISTIANSEN - ROBERTSON — Structural & Civil Engineers

PROJECT: THE WORLD TRADE CENTER | TITLE: BEAM TYPE 512, 513 | DATE: 6-5-67

REVISIONS
9-15-67
10-5-67
11-22-67

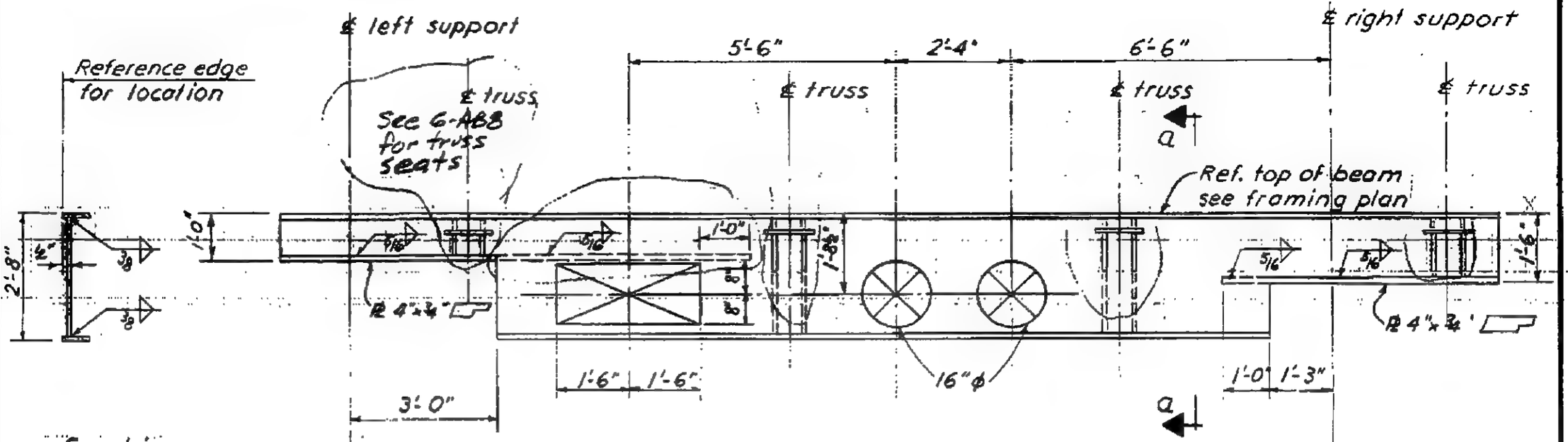


Section a-a

Elevation 512
(513 opposite hand)

LICENSED PROFESSIONAL ENGINEER
LESLIE E. ROBERTSON
No. 34360
UNIVERSITY OF THE STATE OF NEW YORK

5-AB2-22

WORTHINGTON, SKILLING, HELLE & JACKSON — Civil & Structural Engineers

PROJECT: THE WORLD TRADE CENTER | TITLE: BEAM TYPES 415 - 421, 470 | DATE: 6-12-67

REVISIONS
6-19-67
9-15-67
6-21-68
7-17-68

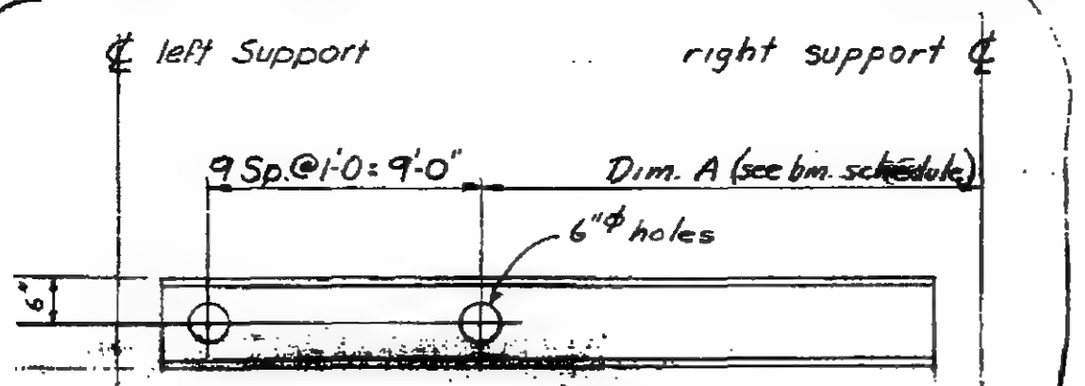


TYPE 415

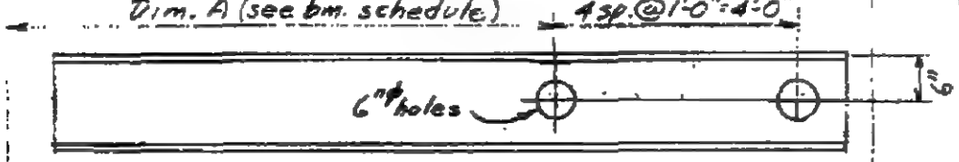


TYPE 416

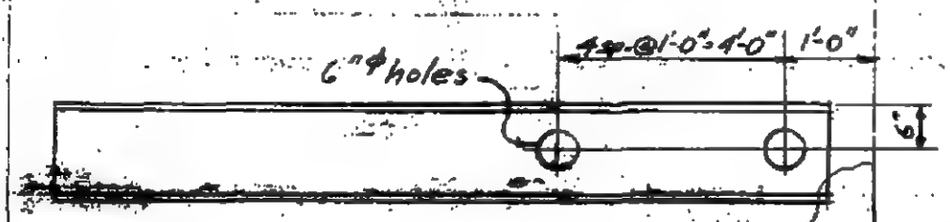


TYPE 417

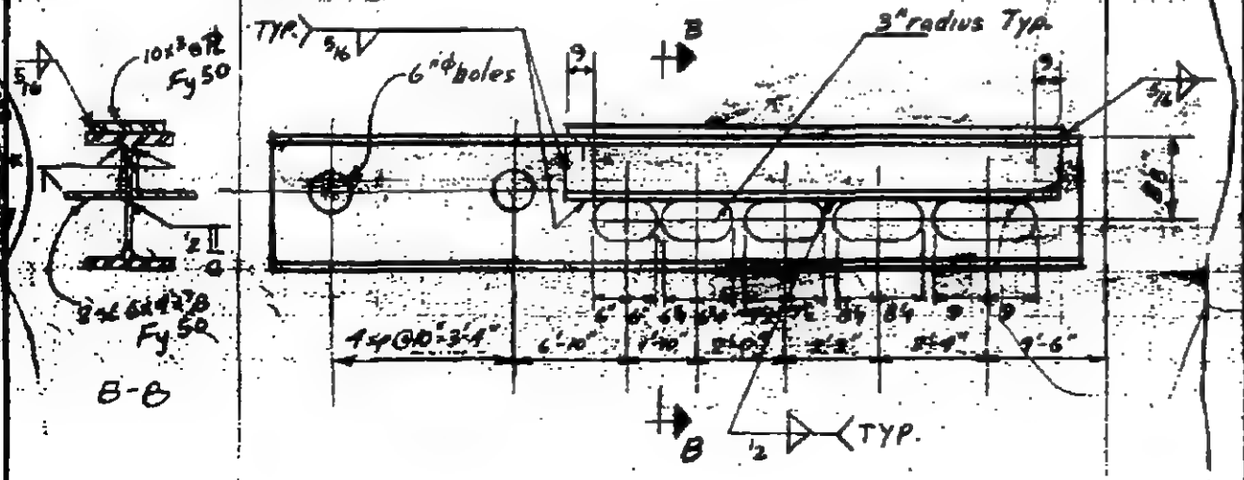


TYPE 470

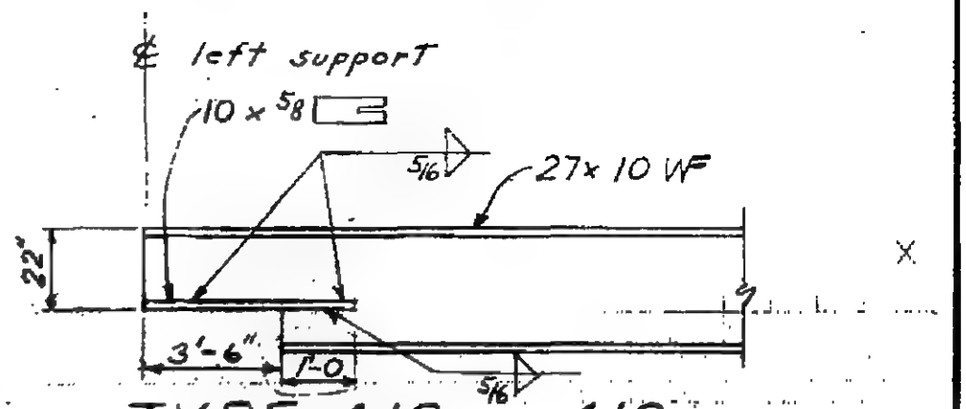


TYPE 418 419 OPP HAND

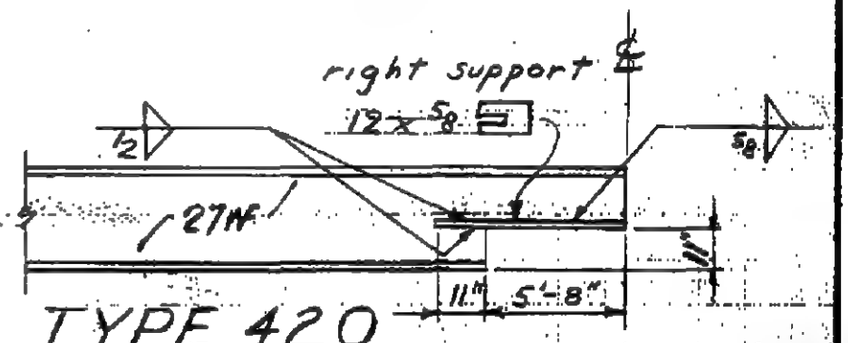


TYPE 420

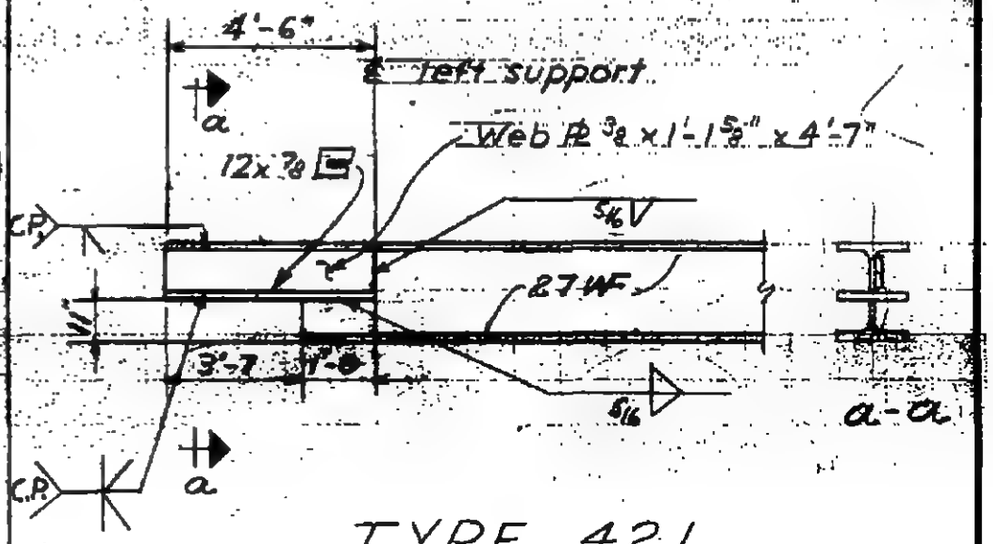


TYPE 421

LICENSED PROFESSIONAL ENGINEER — LESLIE E. ROBERTSON — No. 54900 — UNIVERSITY OF THE STATE OF NEW YORK

5-AB2-23

WORTHINGTON, SKILLING, HELLE & JACKSON — Civil & Structural Engineers

PROJECT: THE WORLD TRADE CENTER | TITLE: BEAM TYPE 700 | DATE: 6-12-67

REVISIONS

8-8-67

10-2-67

11-17-67

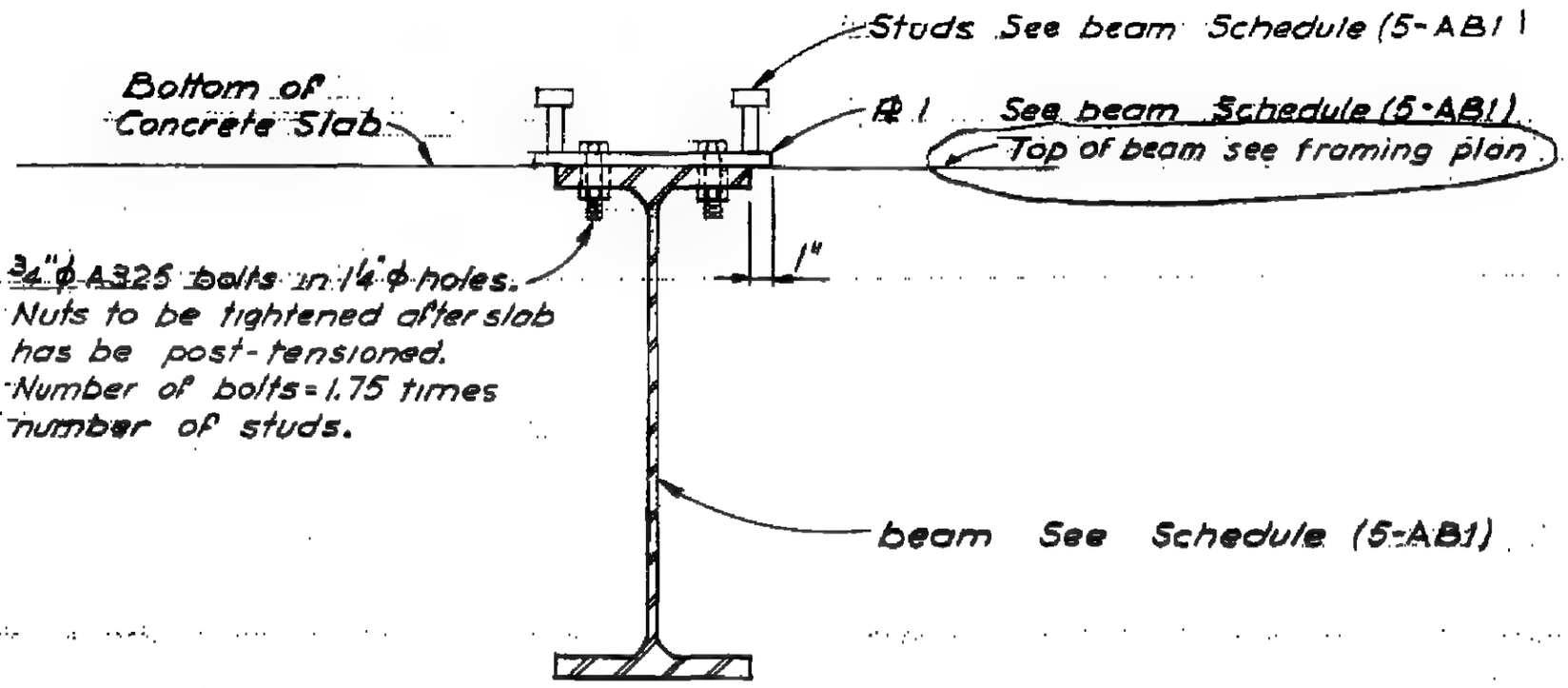

Note:
All Shear studs shall be installed on PL 1 only.
All washers provided should be 1¾ x 7/16 (square or round) with a yield stress of 50 ksi.

5-AB2-24

WORTHINGTON, SKILLING, HELLE & JACKSON — Civil & Structural Engineers

PROJECT THE WORLD TRADE CENTER | TITLE BEAM TYPE 422, 423, 424 | DATE 7-14-67

REVISIONS
9-15-67
10-31-67
12-21-67

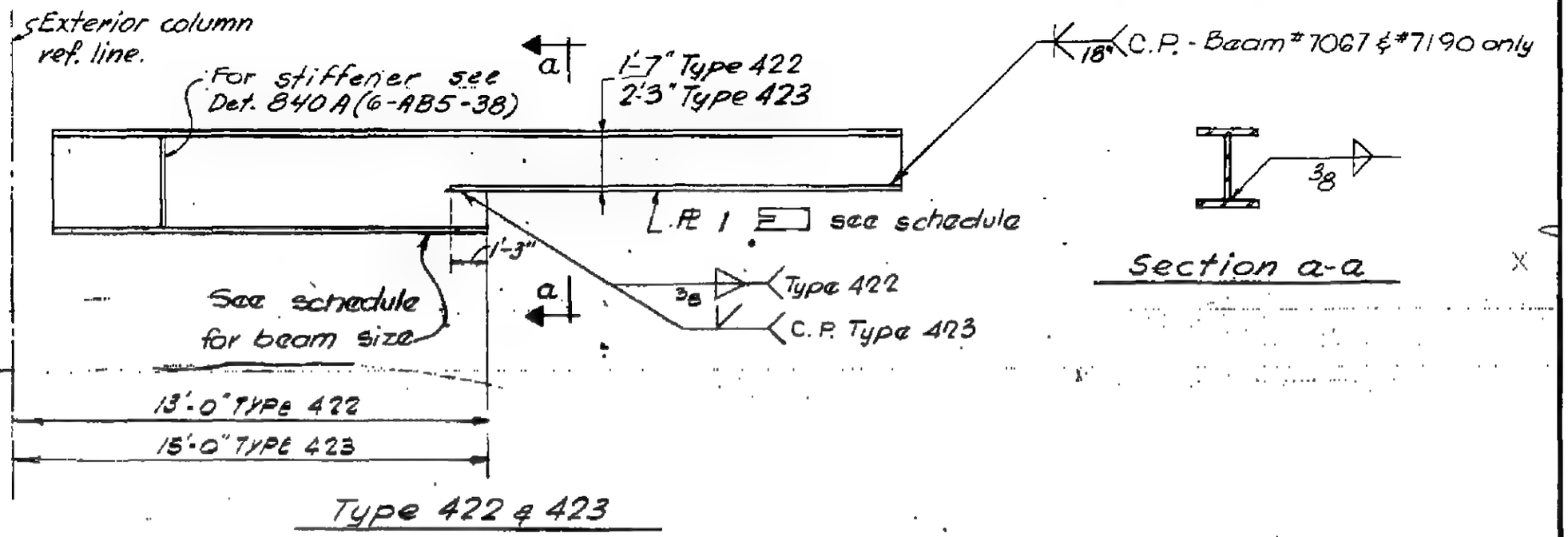


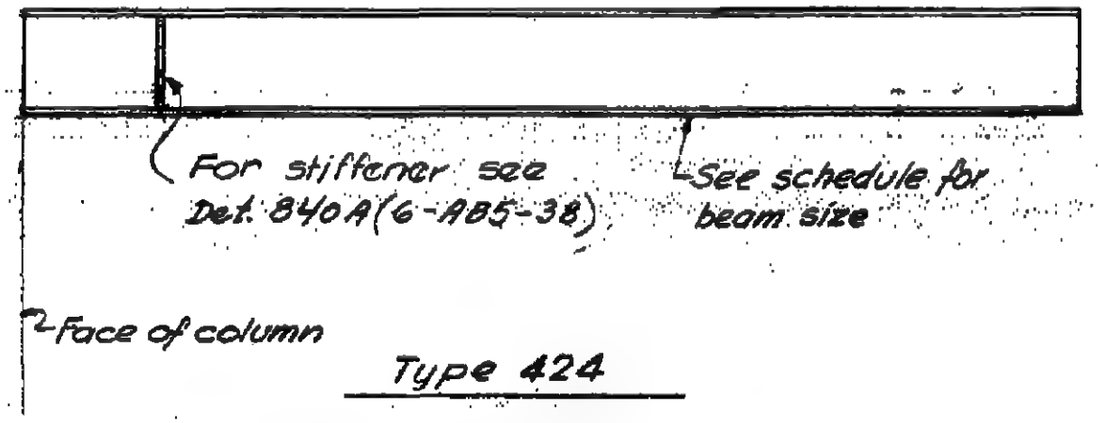


LICENSED PROFESSIONAL ENGINEER
LESLIE E. ROBERTSON
No. 34360
STATE OF NEW YORK

5-AB2-25

WORTHINGTON, SKILLING, HELLE & JACKSON — Civil & Structural Engineers

PROJECT THE WORLD TRADE CENTER | TITLE BEAM TYPE 310 -313 | DATE 7-14-67

REVISIONS
10-31-67

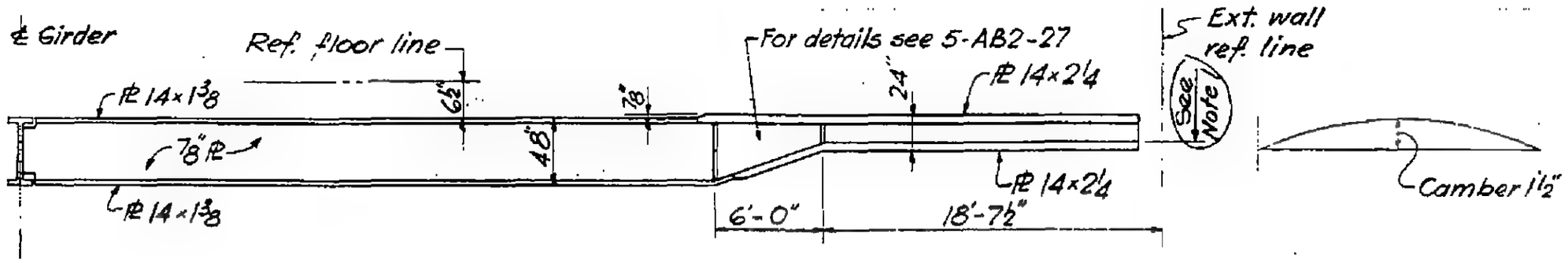


Type 310

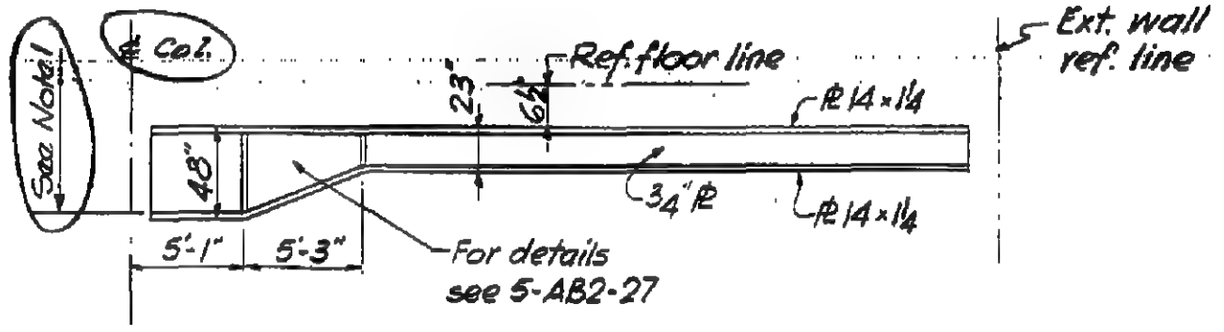


Type 311

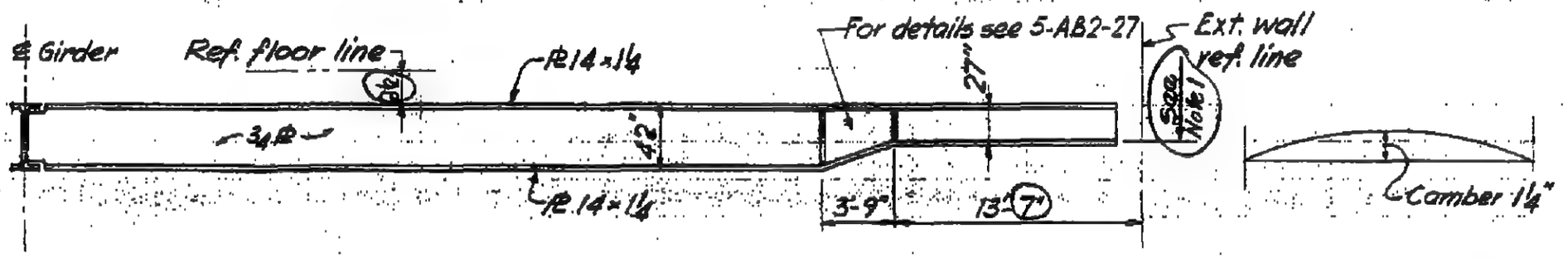


Type 312

Note 1: Web to be finished for bearing

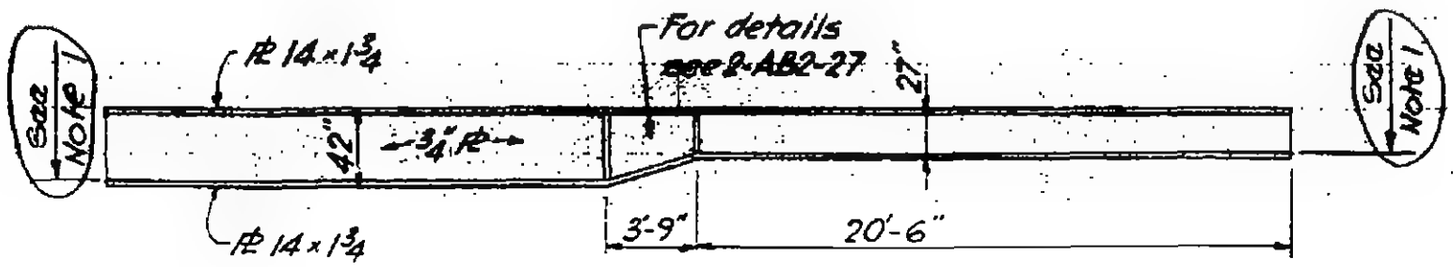


Type 313

LICENSED PROFESSIONAL ENGINEER
LESLIE E. ROBERTSON
No. 34360
UNIVERSITY OF THE STATE OF NEW YORK

5-AB2-26

WORTHINGTON, SKILLING, HELLE & JACKSON — Civil & Structural Engineers

PROJECT THE WORLD TRADE CENTER | TITLE | DATE 7-14-67

REVISIONS

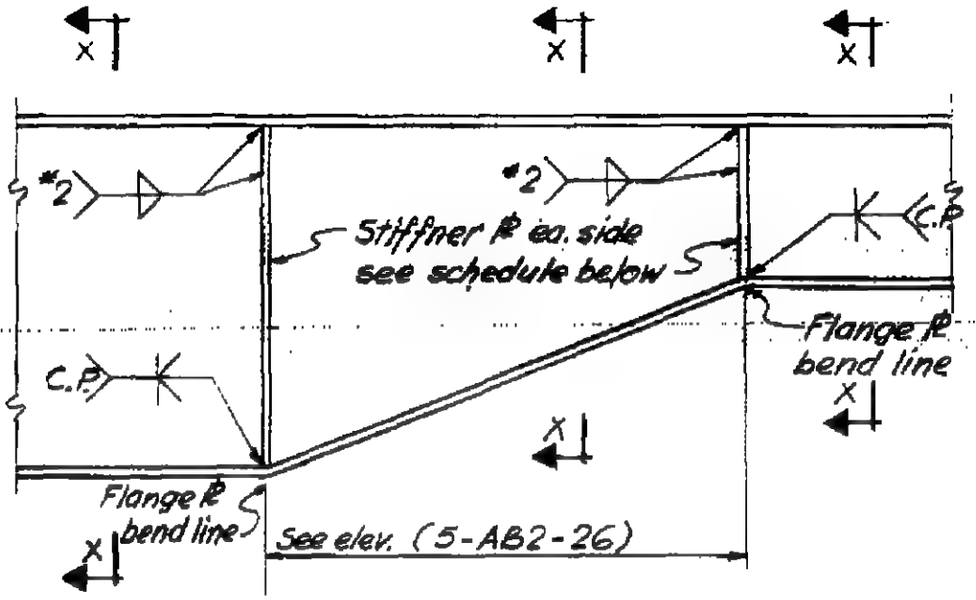


Type 311, 312, 313

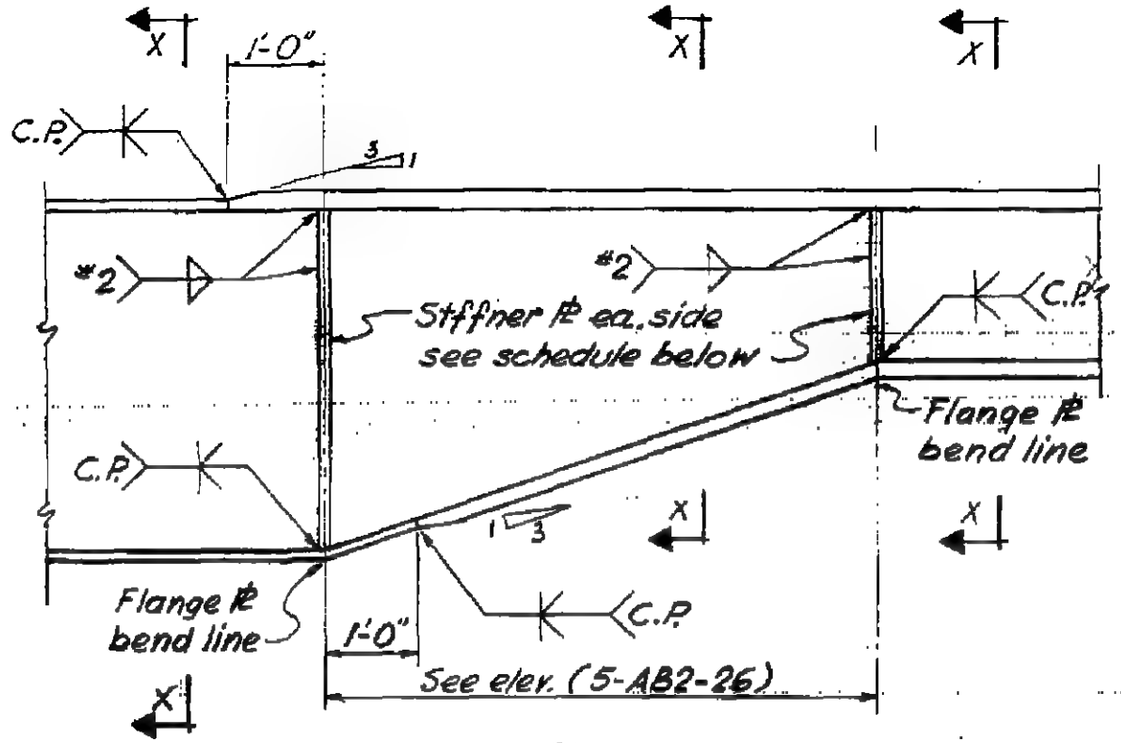


Type 310

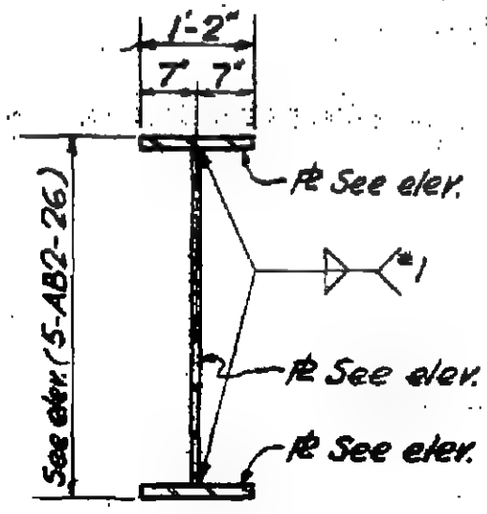


Section X-X

| Beam type | Stiff Pl | Weld #1 | Weld #2 |
|---|---|---|---|
| 310 | 1" | 3/8" | 3/8" |
| 311 | 7/8" | 5/16 | 5/16 |
| 312 | 3/4" | 5/16 | 5/16 |
| 313 | 7/8" | 3/8 | 3/8 |

LICENSED PROFESSIONAL ENGINEER LESLIE E. ROBERTSON No. 34360 UNIVERSITY OF THE STATE OF NEW YORK

5-AB2-27

SKILLING - HELLE - CHRISTIANSEN - ROBERTSON — Structural & Civil Engineers

PROJECT: THE WORLD TRADE CENTER | TITLE: BEAM DETAIL BEAM ELEVATION 428-431 | DATE: 9-15-67

REVISIONS
9-29-67
12-21-67

Note:
Where cover plate (PL 1) is indicated and dim. A is not given cover plate (PL 1) is centered on beam.

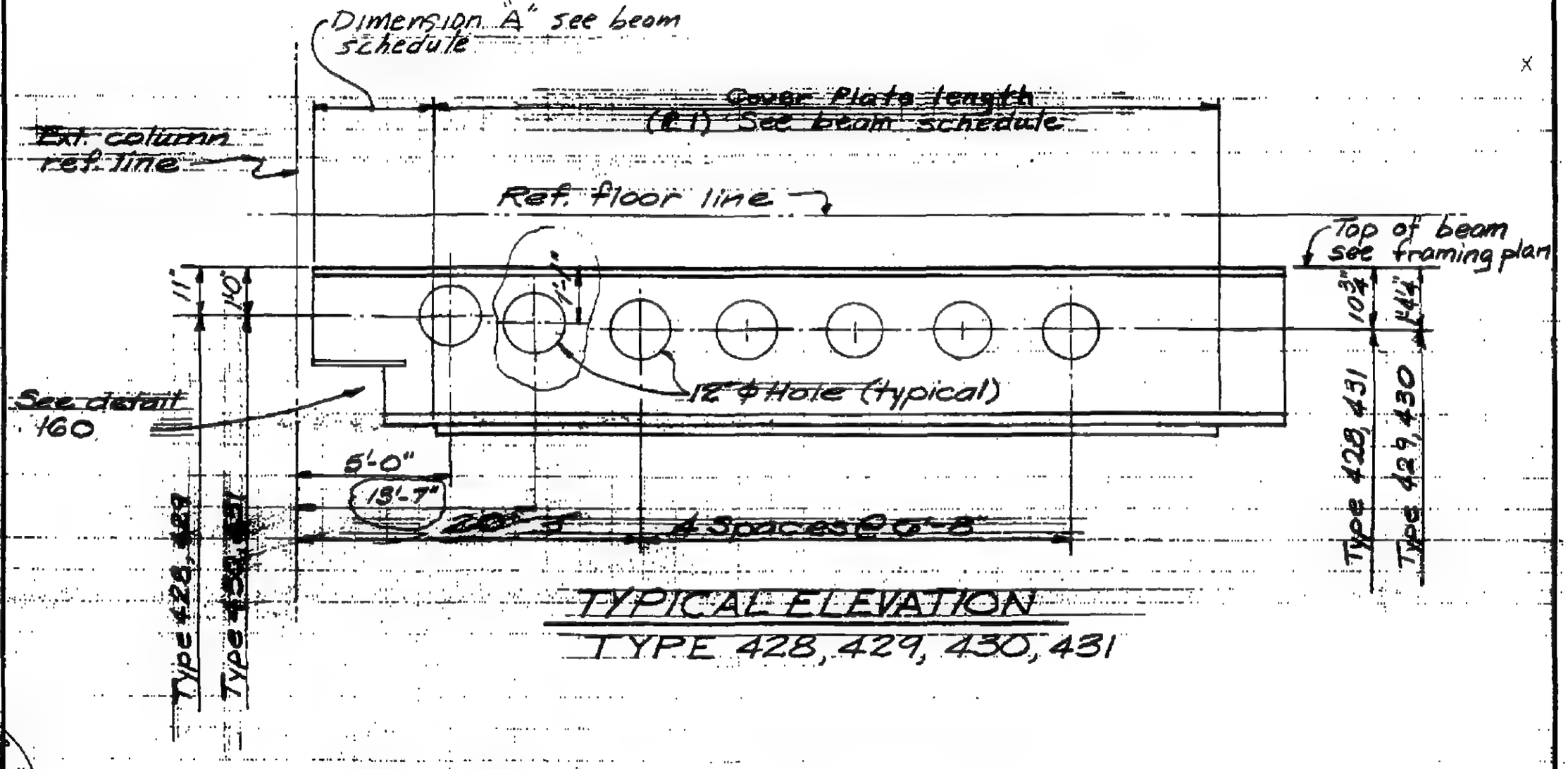


TYPICAL ELEVATION
TYPE 428, 429, 430, 431

LICENSED PROFESSIONAL ENGINEER
LESLIE E. ROBERTSON
No. 34360
UNIVERSITY OF THE STATE OF NEW YORK

5-AB2-28

SKILLING - HELLE - CHRISTIANSEN - ROBERTSON  Structural & Civil Engineers

PROJECT THE WORLD TRADE CENTER | TITLE BEAM TYPES 426, 427, 432 & 435 | DATE 9-15-67

REVISIONS
9-29-67
11-21-67
12-21-67

NOTE ①: Where cover plate (R1) is indicated and dim "A" is not given, cover plate (R1) is centered on beam.

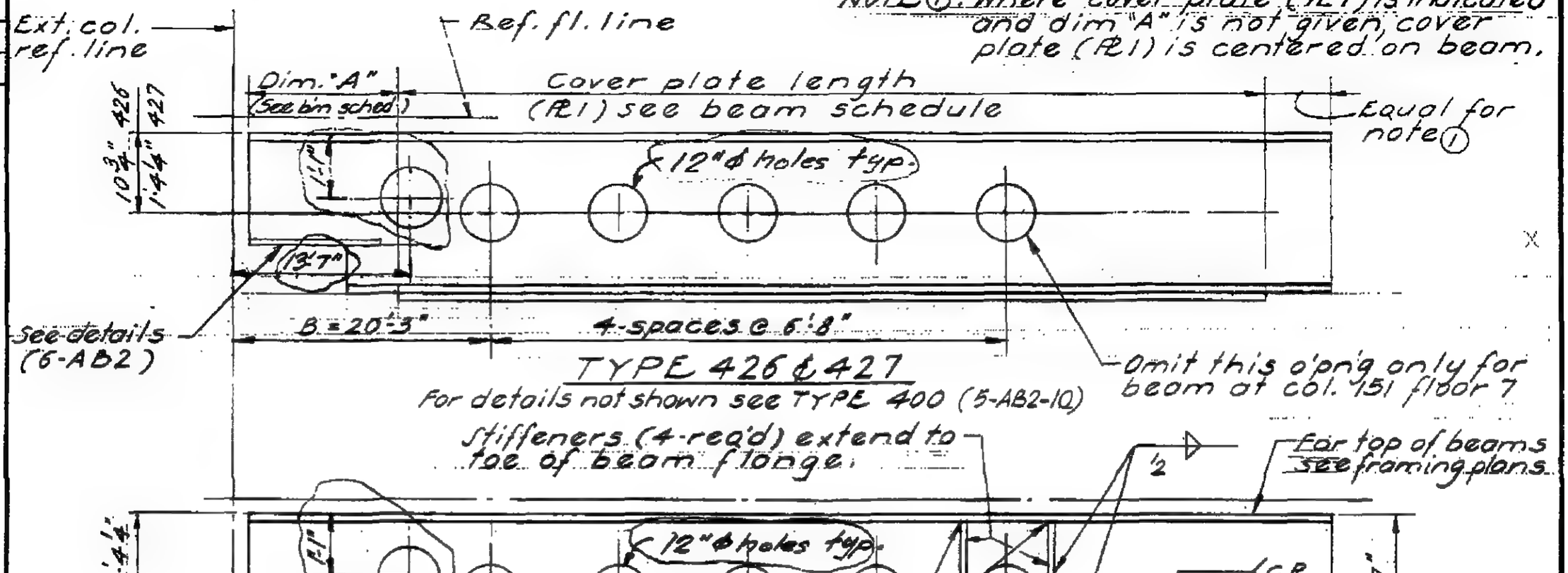


TYPE 426 & 427

For details not shown see TYPE 400 (5-AB2-10)




TYPE 432

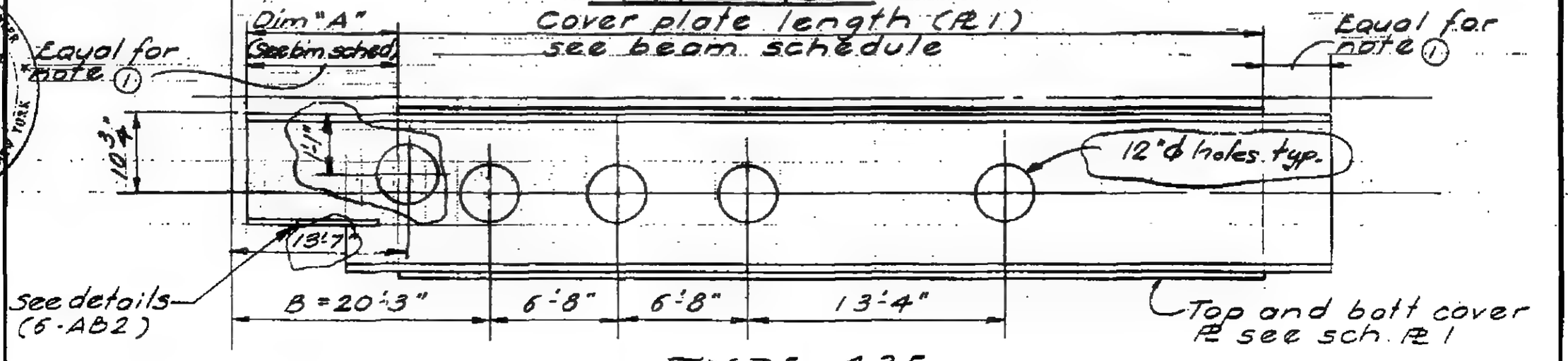


TYPE 435

For details not shown see TYPE 402 (5-AB2-11)

5-AB2-29

LICENSED PROFESSIONAL ENGINEER LESLIE E. ROBERTSON No. 34360 UNIVERSITY OF THE STATE OF NEW YORK

SKILLING - HELLE - CHRISTIANSEN - ROBERTSON — Structural & Civil Engineers

PROJECT: THE WORLD TRADE CENTER | TITLE: BEAM DETAIL - BEAM ELEVATION 433 | DATE: 9-15-67

REVISIONS

12-21-67

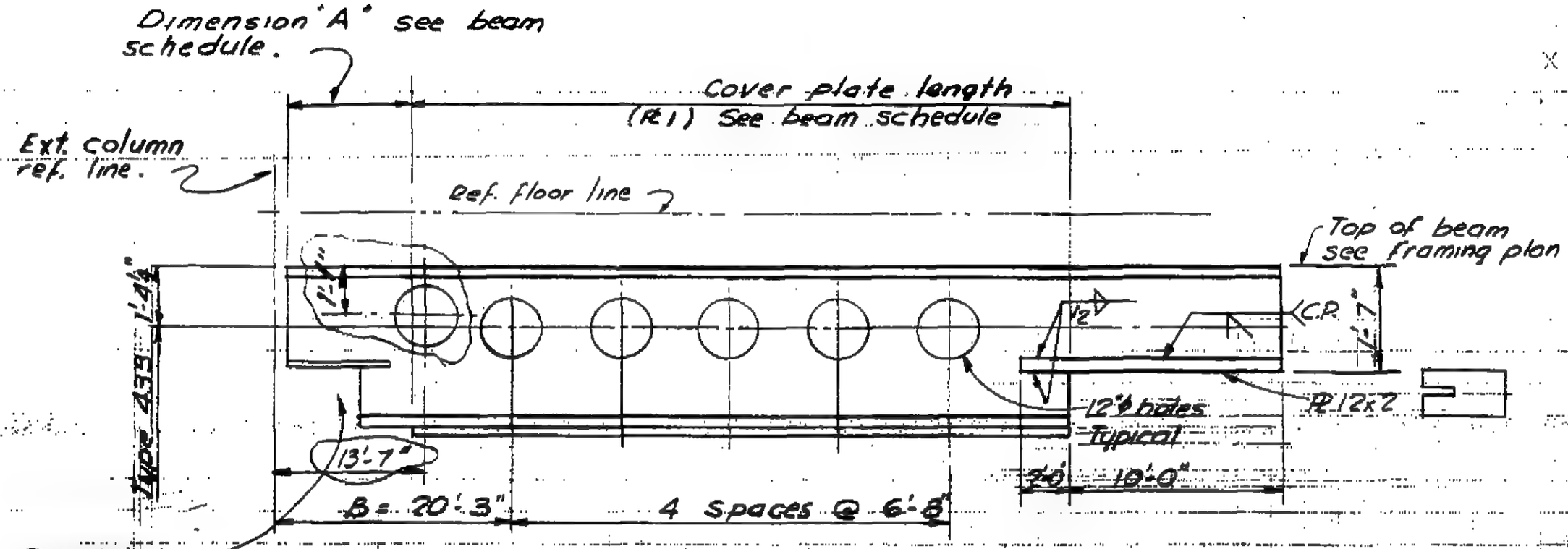


TYPICAL ELEVATION

LICENSED PROFESSIONAL ENGINEER
LESLIE E. ROBERTSON
No. 34360
OF THE STATE OF NEW YORK

5-AB2-30

SKILLING - HELLE - CHRISTIANSEN - ROBERTSON — Structural & Civil Engineers

PROJECT THE WORLD TRADE CENTER | TITLE BEAM TYPE 434, 458, 459 | DATE 9-29-67

REVISIONS
12-21-67
2-9-68
3-29-68

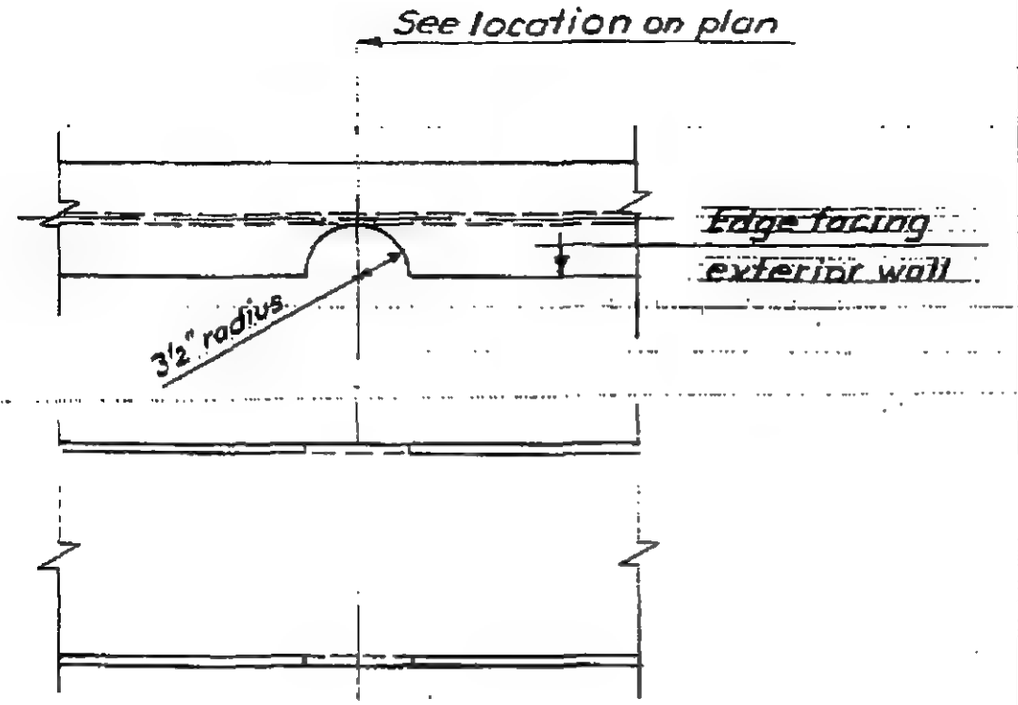


Beam Type 434

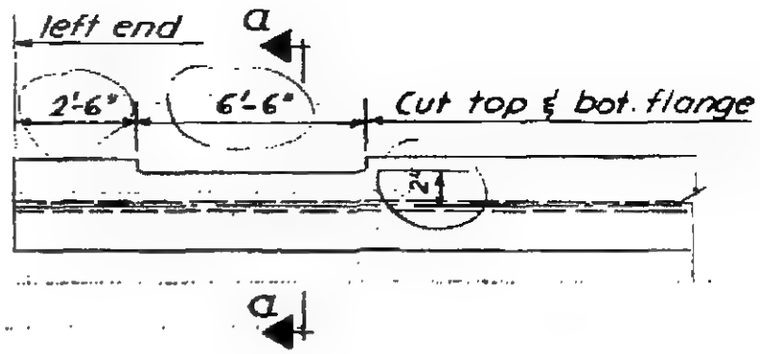

Section a-a

Beam Type 458

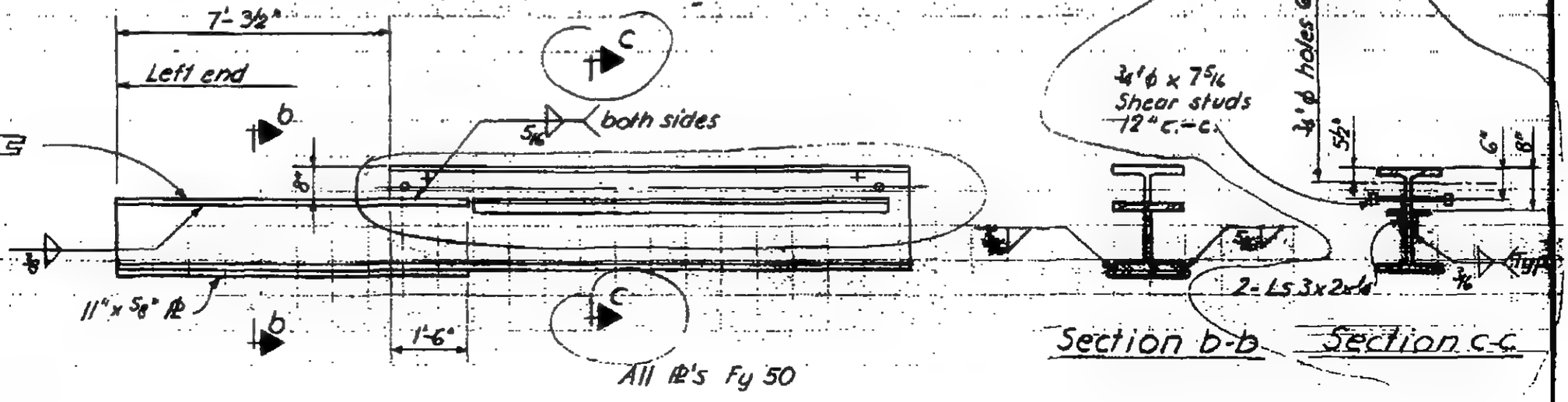


Beam Type 459

LICENSED PROFESSIONAL ENGINEER — LESLIE E. ROBERTSON — No. 34360 — UNIVERSITY OF THE STATE OF NEW YORK

5-AB2-31

SKILLING - HELLE - CHRISTIANSEN - ROBERTSON — Structural & Civil Engineers

PROJECT THE WORLD TRADE CENTER | TITLE BEAM TYPE 436 & 437 | DATE 9-29-67

REVISIONS
10-31-67
12-21-67

Left support

Right support ℄

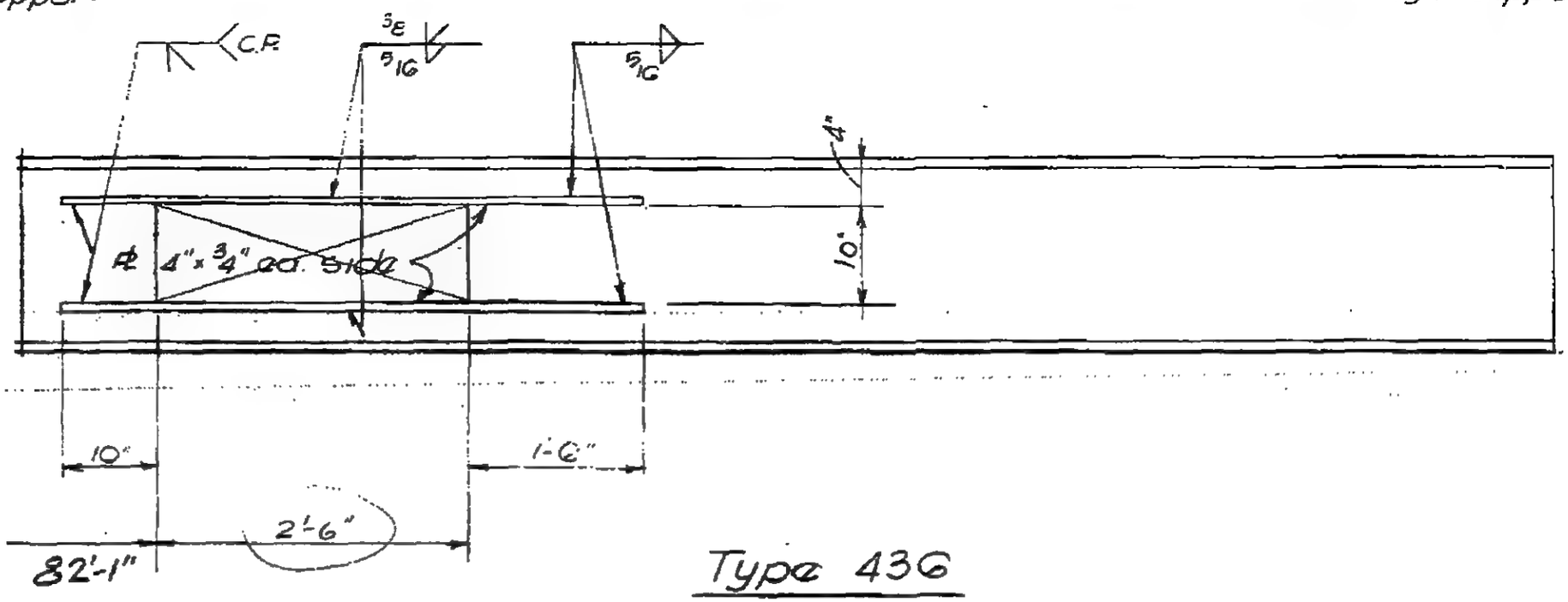


Type 436

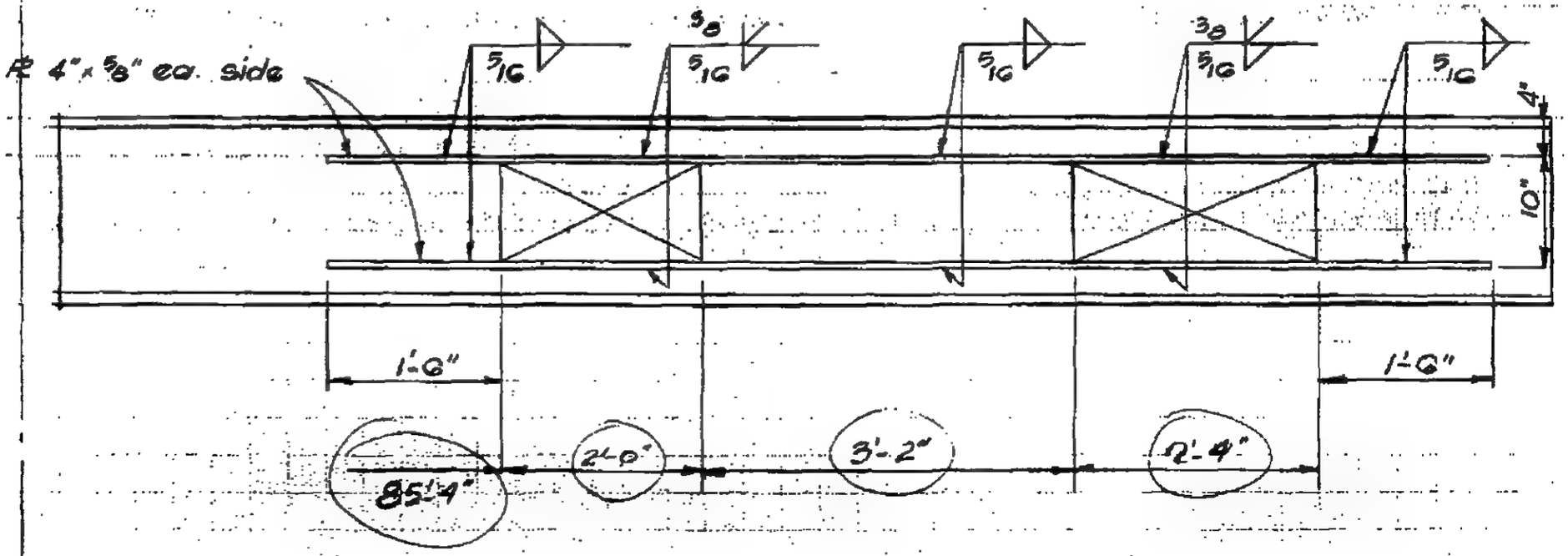


Type 437

LICENSED PROFESSIONAL ENGINEER
LESLIE E. ROBERTSON
No. 34360
UNIVERSITY OF THE STATE OF NEW YORK

5-AB2-32

SKILLING - HELLE - CHRISTIANSEN - ROBERTSON Structural & Civil Engineers

PROJECT THE WORLD TRADE CENTER | TITLE BEAM TYPE 440 & 445 | DATE 10-2-67

REVISIONS
10/23/67
12/21/67

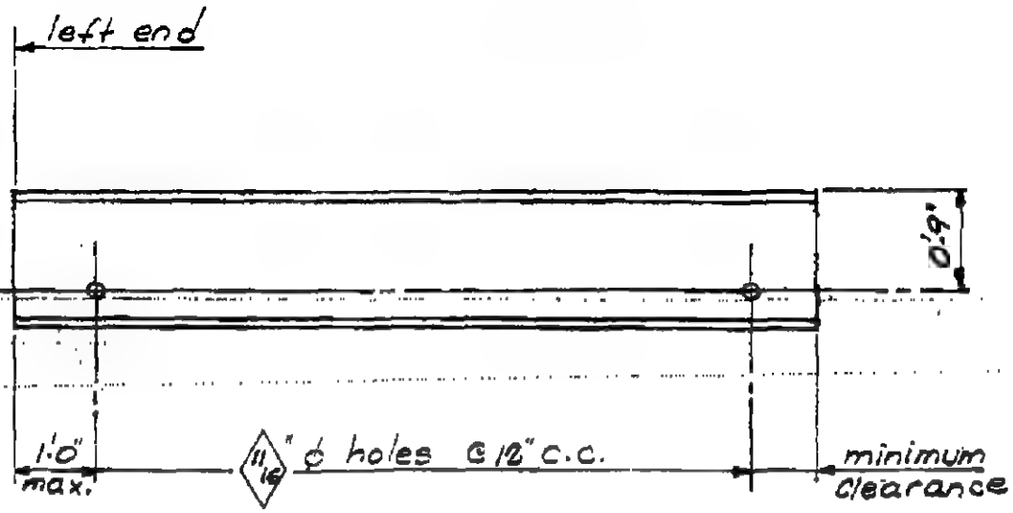


Note:
Holes must be matched with adjacent beams (type 440) to allow placing of reinforcing bars perpendicular to beam

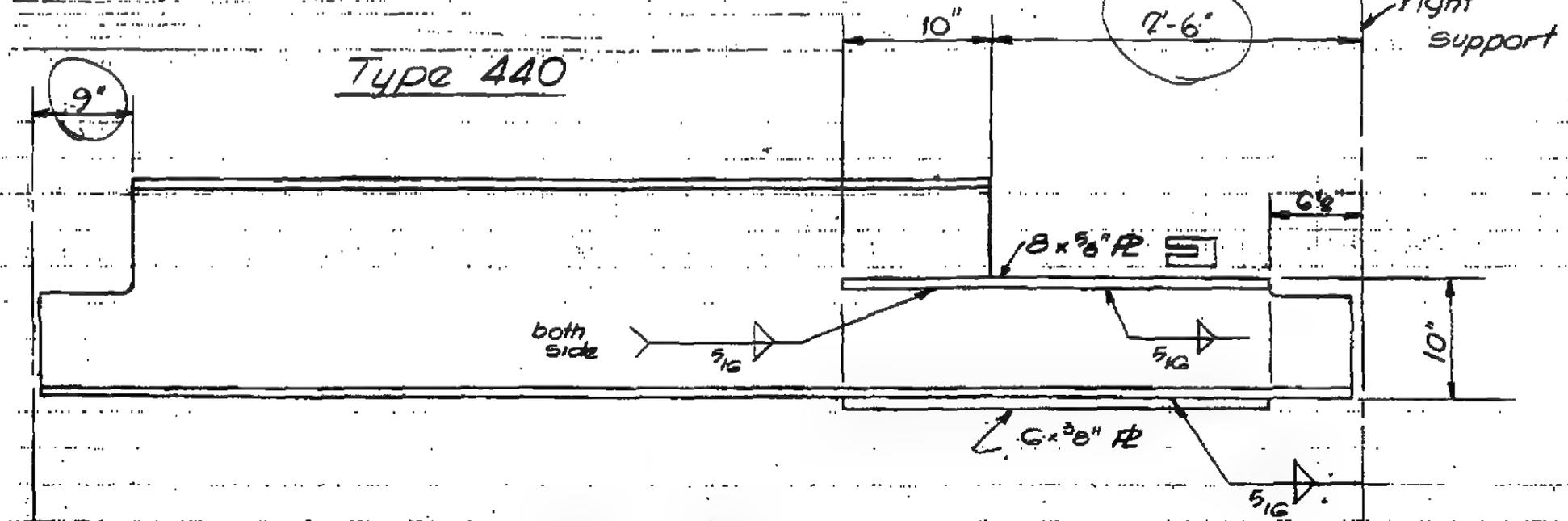


Type 445

LICENSED PROFESSIONAL ENGINEER
LESLIE E. ROBERTSON
No. 34360
UNIVERSITY OF THE STATE OF NEW YORK

5-A82-33

SKILLING -- HELLE -- CHRISTIANSEN -- ROBERTSON Structural & Civil Engineers

PROJECT THE WORLD TRADE CENTER | TITLE BEAM TYPE ~~446~~ 449 | DATE 10-30-67

REVISIONS
11-21-67

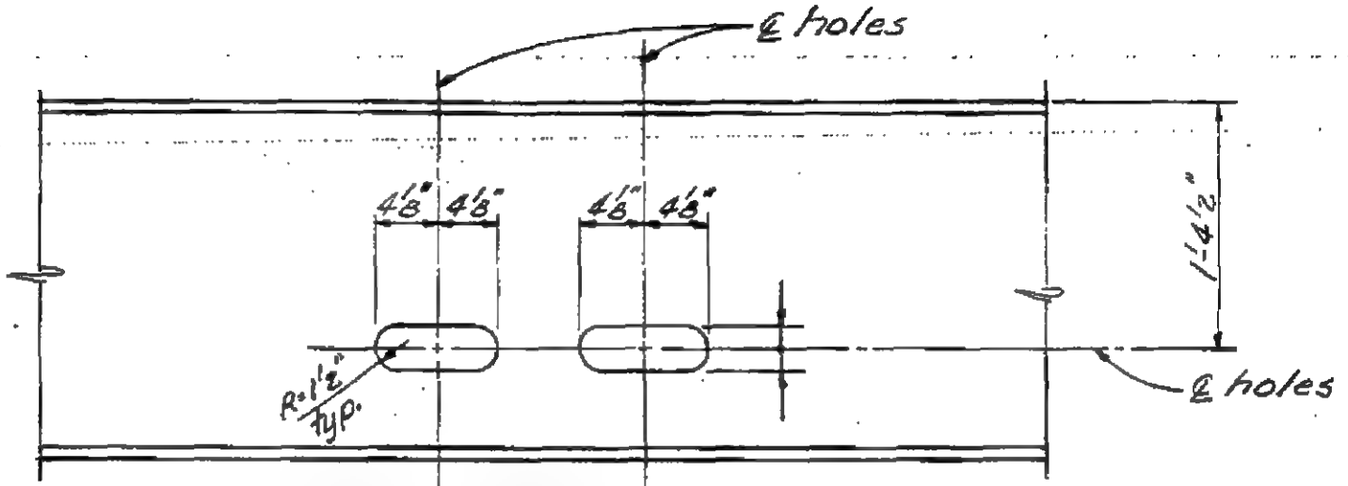


BEAM TYPE 446

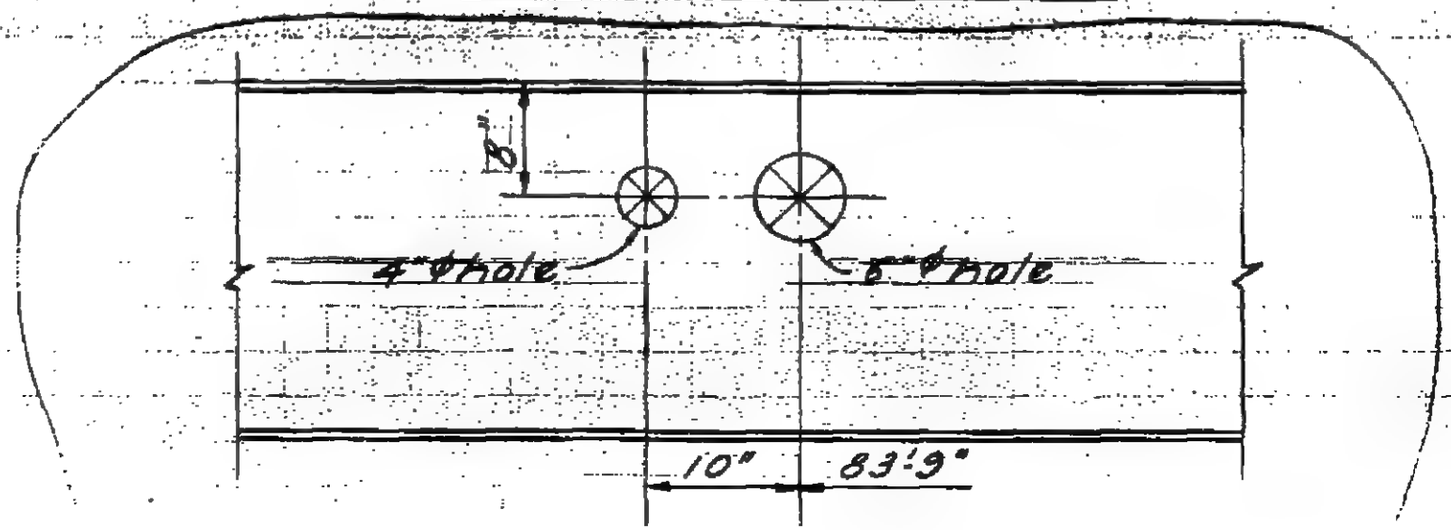


BEAM TYPE 449

LICENSED PROFESSIONAL ENGINEER
LESLIE E. ROBERTSON
No. 34360
UNIVERSITY OF THE STATE OF NEW YORK

5-AB2-34

SKILLING - HELLE - CHRISTIANSEN - ROBERTSON — Structural & Civil Engineers

PROJECT THE WORLD TRADE CENTER | TITLE BEAM ELEVATION TYPE 451, 452, 456 | DATE 11-21-67

REVISIONS

Note 1 Where cover plate (℄ 1) is indicated and dim. "A" is not given, cover plate (℄ 1) is centered on beam.

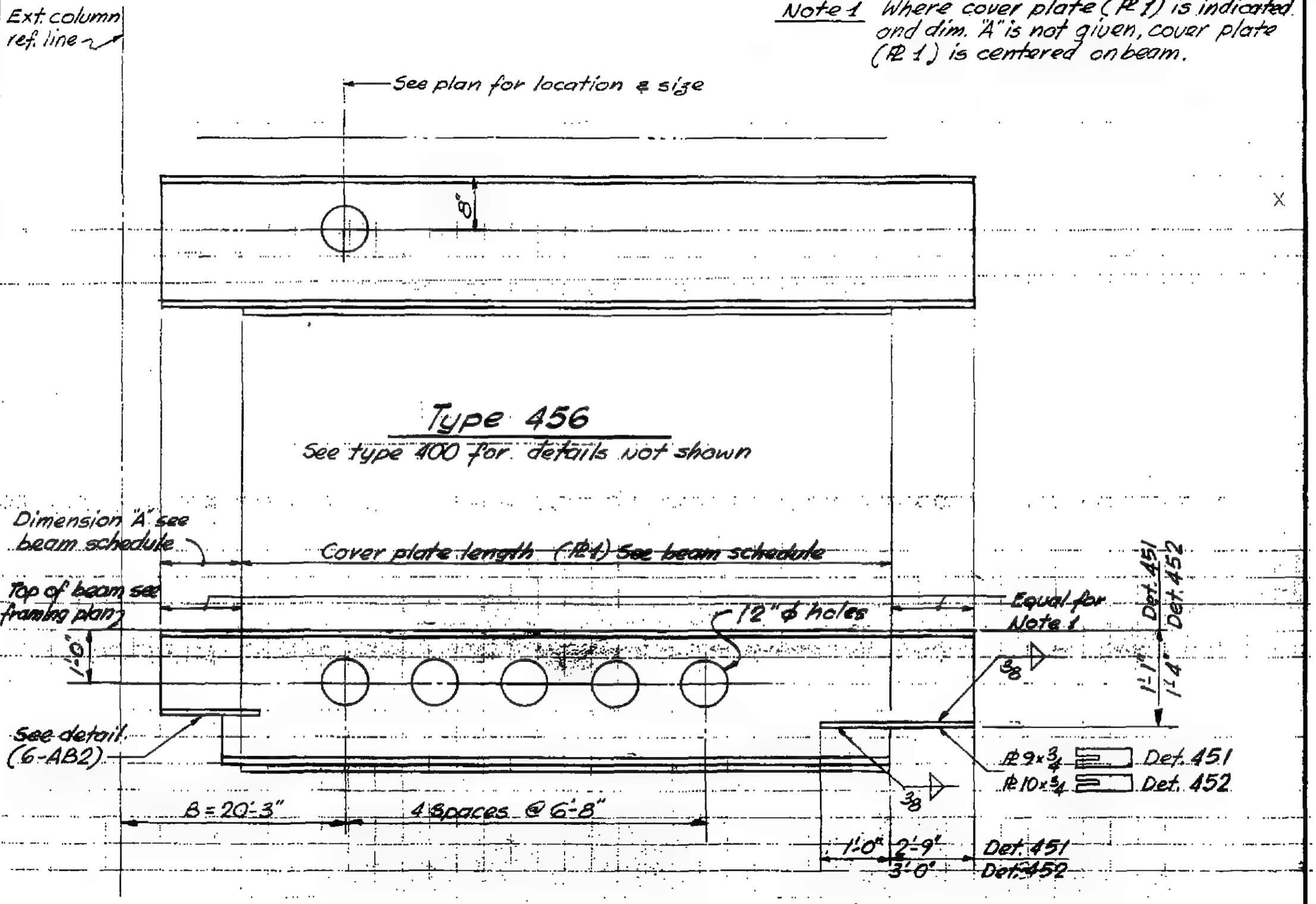


Type 451 & 452

See type 400 for details not shown

5-AB2-35

SKILLING - HELLE - CHRISTIANSEN - ROBERTSON — Structural & Civil Engineers

PROJECT THE WORLD TRADE CENTER | TITLE BEAM ELEVATION TYPE 453, 454, 455 | DATE 11-21-67

REVISIONS

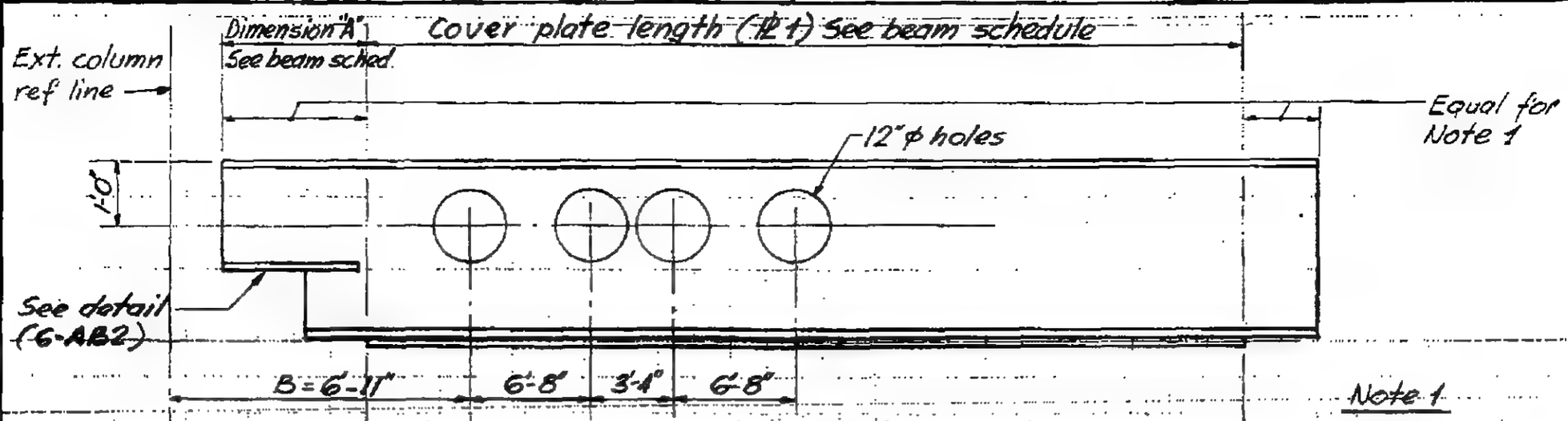


## Type 453

See type 400 for details not shown (5-AB2-10)

Note 1

Where cover plate (℄1) is indicated and dim. "A" is not given, cover plate (℄1) is centered on beam.

## Type 454

See type 400 for details not shown (5-AB2-10)

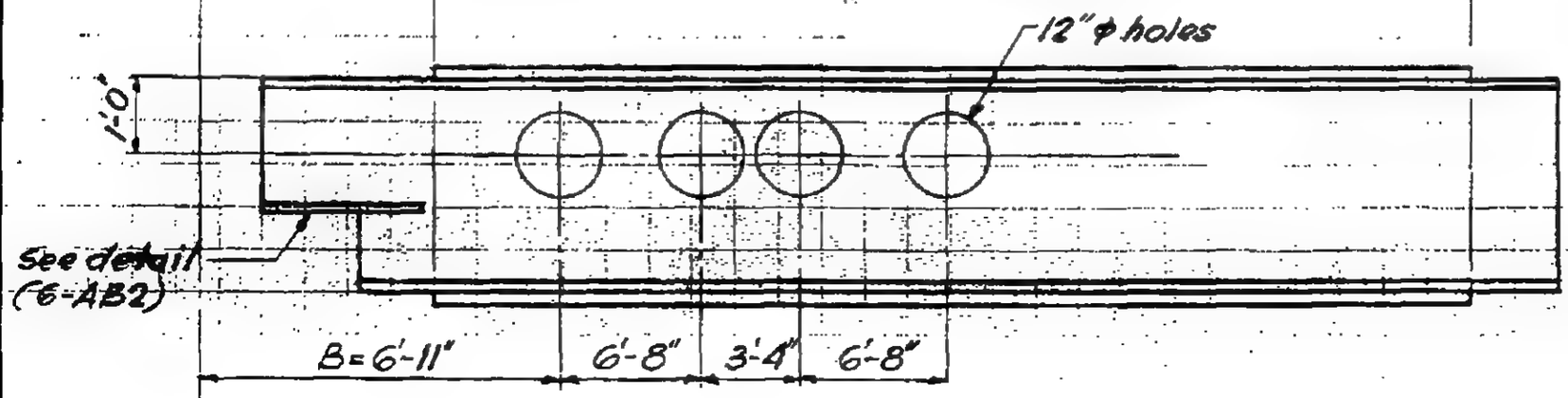


## Type 455

See type 402 for details not shown (5-AB2-11)

5-AB2-36

SKILLING - HELLE - CHRISTIANSEN - ROBERTSON — Structural & Civil Engineers

PROJECT THE WORLD TRADE CENTER | TITLE BEAM ELEVATION TYPE 413, 414 | DATE 11-21-67

REVISIONS

Note 1 Where cover plate (PL 1) is indicated and dim. "A" is not given, cover plate (PL 1) is centered on beam.

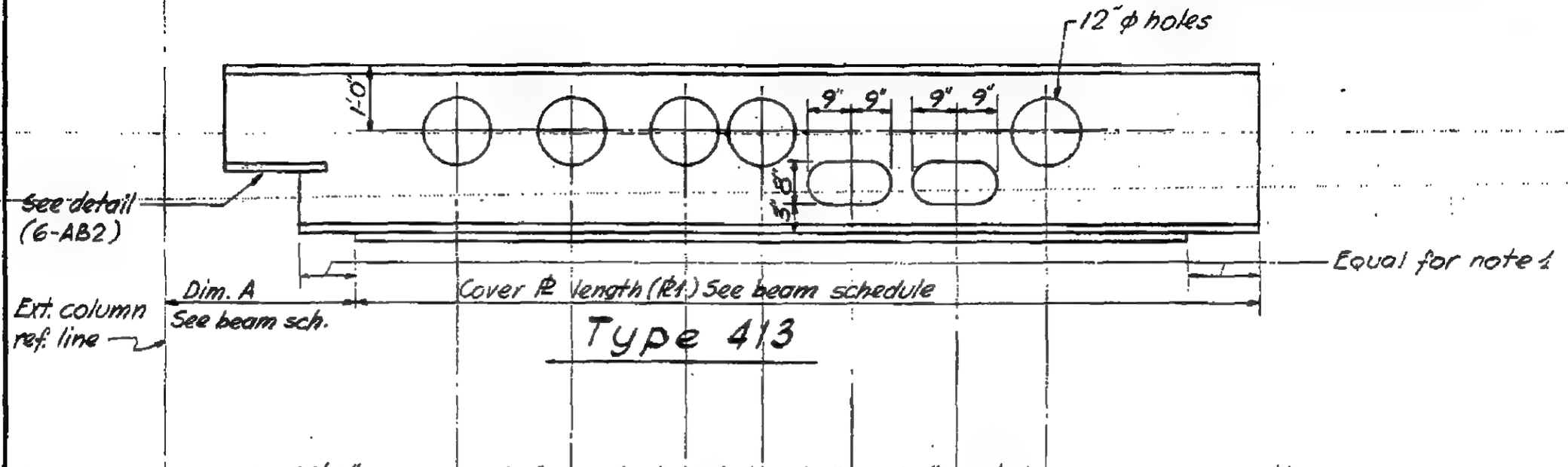


Type 413

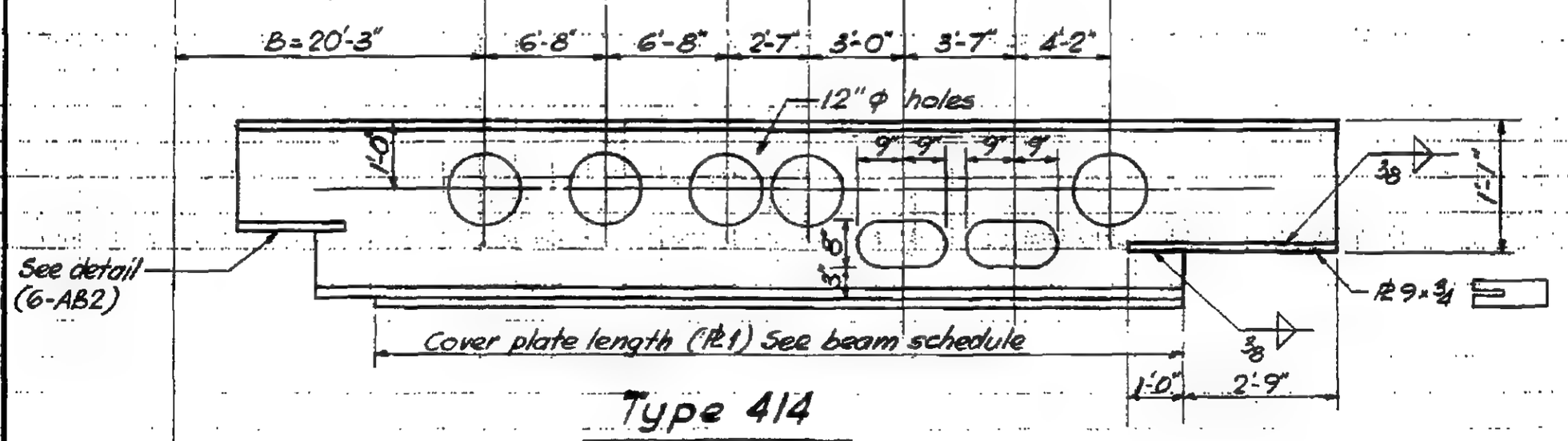


Type 414

Beam type 413 & 414 previously shown on 5-AB2-21

5-AB2-37

SKILLING - HELLE - CHRISTIANSEN - ROBERTSON — Structural & Civil Engineers

PROJECT: THE WORLD TRADE CENTER | TITLE: BEAM TYPE 460, 461, 462, 463, 465, 467 | DATE: 2-1-68

REVISIONS
5-7-68
7-17-68
9-25-68

℄ Left support — ℄ Right support

8'-9" — 9 spaces @ 9" = 6'-9"

9"

6"ϕ holes

## 460

4 spaces @ 12" = 4'-0" | 9'-3" (467)

℄ Left support — ℄ Right support

4 spaces @ 12" = 4'-0" | 5'-0" (461)
8'-0" (462)
4 spaces @ 11" = 3'-8" | 1'-4" (465)

9"

6"ϕ holes

## 461, 462, 465, 467

℄ Left support — ℄ Right support

2'-0" — 4 spaces @ 14" = 4'-8"

9"

6"ϕ holes

## 463

LICENSED PROFESSIONAL ENGINEER
LESLIE E. ROBERTSON
No. 34360
UNIVERSITY OF THE STATE OF NEW YORK

5-AB2-38

SKILLING - HELLE - CHRISTIANSEN - ROBERTSON  Structural & Civil Engineers

PROJECT THE WORLD TRADE CENTER | TITLE BEAM TYPE 464, 466 | DATE 2-12-68

REVISIONS

5-7-68

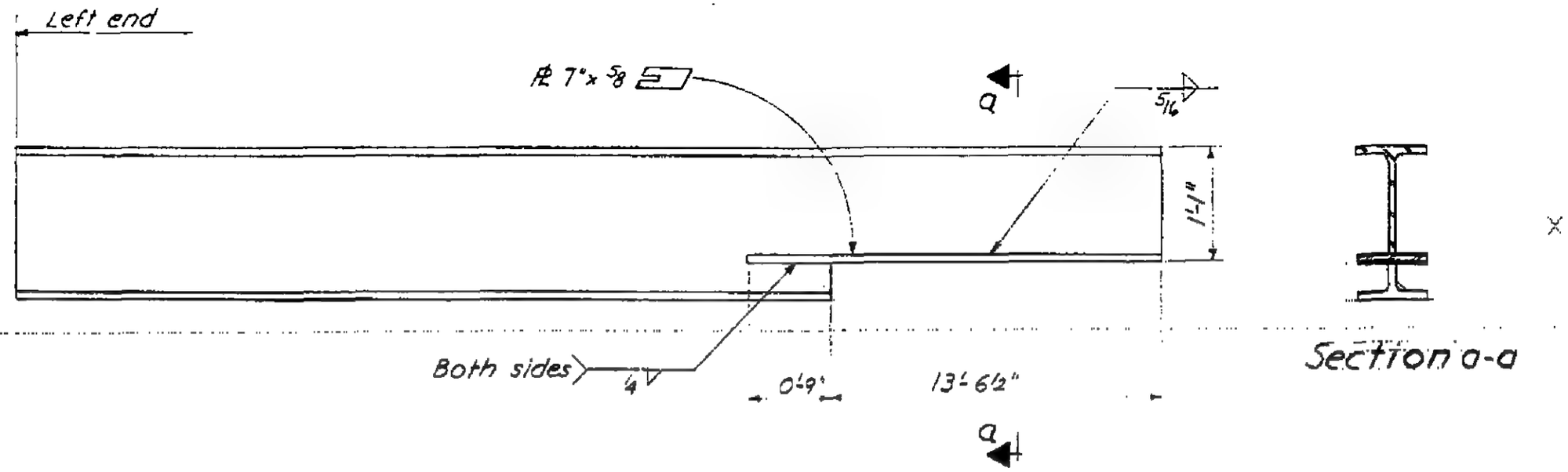


## Beam Type 464

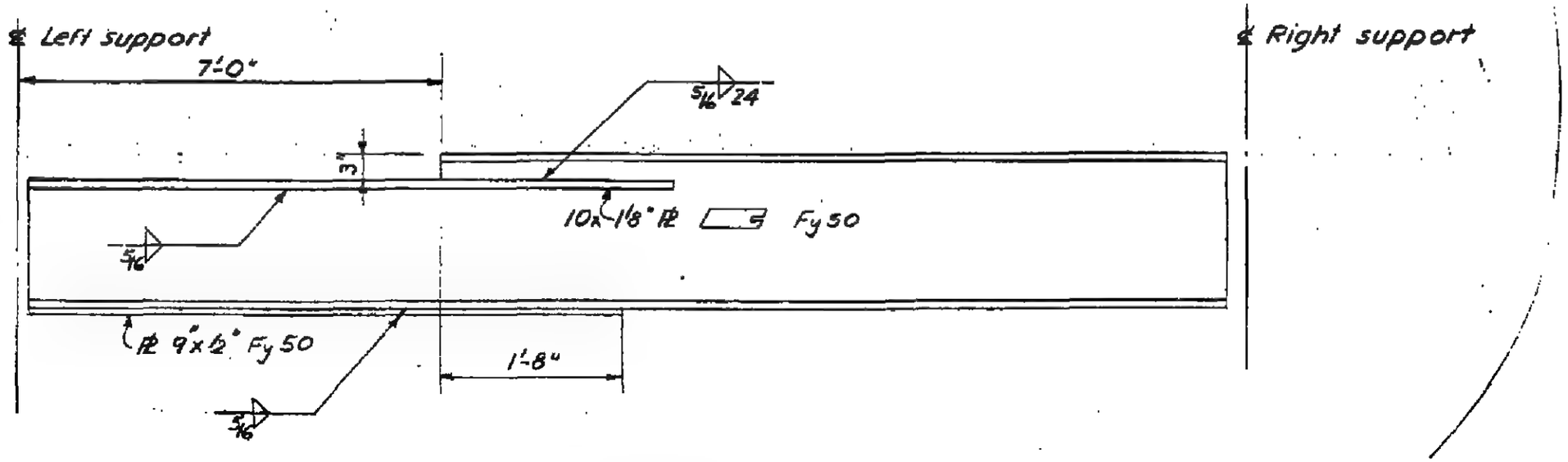


## Beam Type 466

LICENSED PROFESSIONAL ENGINEER
LESLIE E. ROBERTSON
No. 34360
UNIVERSITY OF THE STATE OF NEW YORK

16

5-AB2-39

SKILLING, HELLE, CHRISTIANSEN, ROBERTSON — Structural & Civil Engineers

PROJECT THE WORLD TRADE CENTER | TITLE BEAM TYPE 469, 468 | DATE 9-25-68

REVISIONS

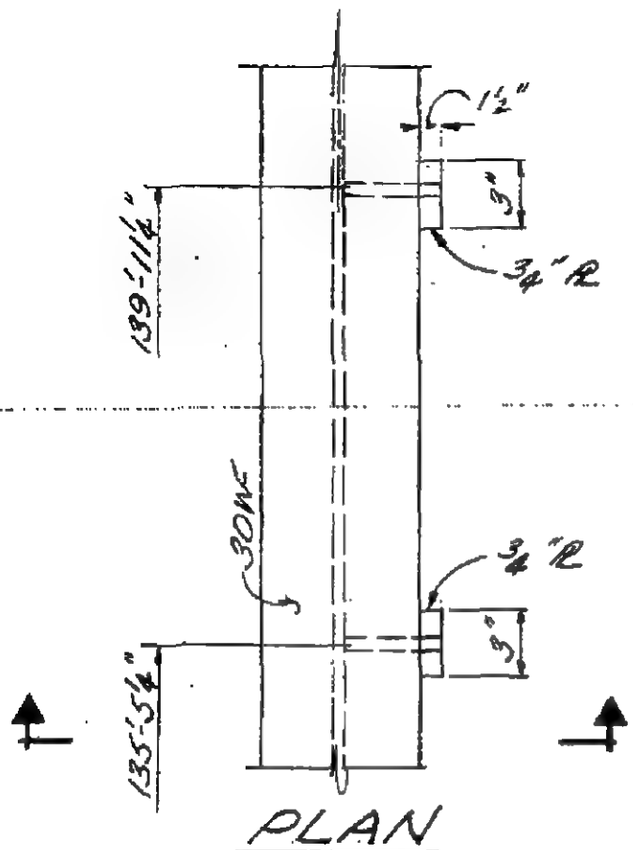


PLAN

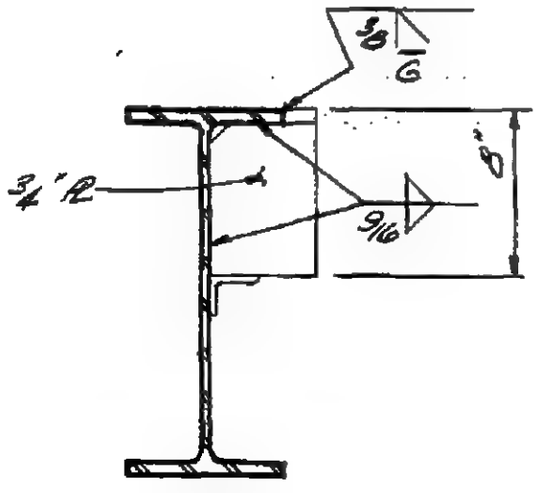


Section a-a

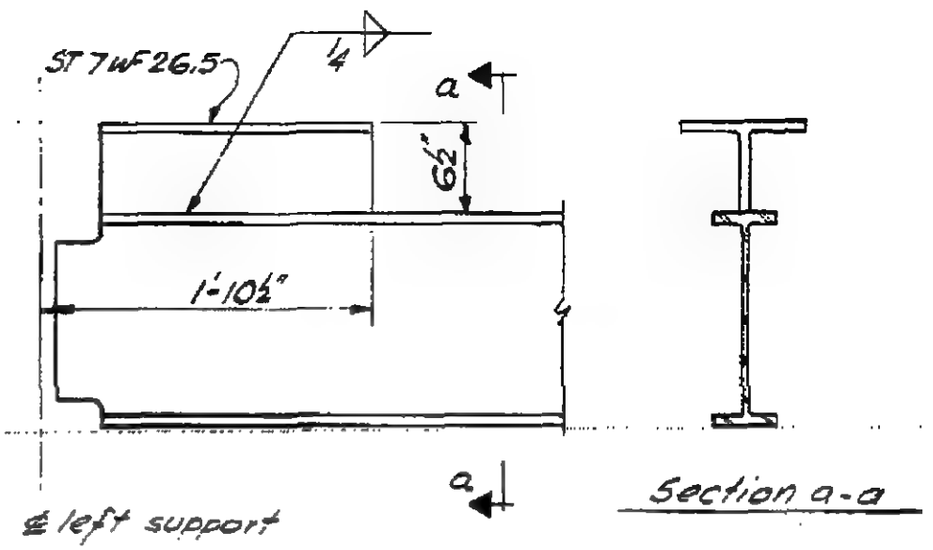


℄ left support

Section a-a

## Beam type 468

Use on beam #4771 with E-W coordinate 58'-6¾" on floor 76

LESLIE E. ROBERTSON — No. 34360 — UNIVERSITY OF THE STATE OF NEW YORK — LICENSED PROFESSIONAL ENGINEER

DESIGNED

DRAWN

REVIEWED

5-ABZ-40

SKILLING - HELLE - CHRISTIANSEN - ROBERTSON — Structural & Civil Engineers

PROJECT THE WORLD TRADE CENTER | TITLE STUDS-INDEX & GENERAL NOTES | DATE 11-9-67

REVISIONS
12-21-67
1-3-69
2-3-69
3-3-69
4-1-69
Printed 5-1-69

## Index


5-AB3-1 Studs - Index & General Notes.
5-AB3-2 Studs - Typical Details.
5-AB3-3 Studs - Standard placement.
5-AB3-4 Studs - Standard placement.
5-AB3-5 Studs - Standard placement.


## General Notes

1. Studs shall be manufactured from AISI grade C1015, C1017 or C1020 steel conforming to the requirements of ASTM A108.
2. Studs shall be applied by using a stud welding system providing a minimum current of 2000 amperes.
3. See beam elevations G-AB8 for studs on perimeter core beams.

LICENSED PROFESSIONAL ENGINEER LESLIE E. ROBERTSON No. 34360 UNIVERSITY OF THE STATE OF NEW YORK

72

5-AB3-1

SKILLING - HELLE - CHRISTIANSEN - ROBERTSON — Structural & Civil Engineers

PROJECT: THE WORLD TRADE CENTER | TITLE: STUDS - TYPICAL DETAILS | DATE: 11-9-67

REVISIONS
12-6-68

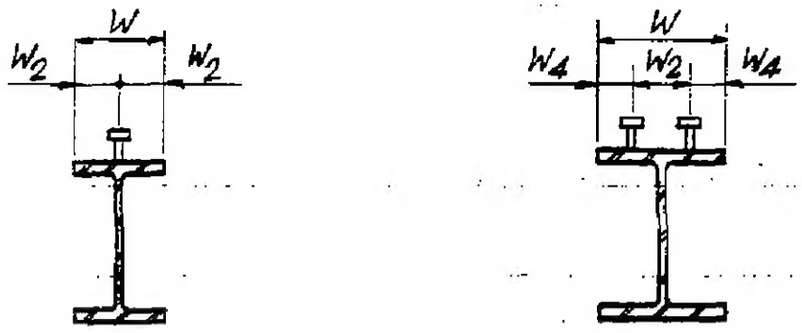


One row for W ≤ 9" — Two rows for W > 9"

Typical Detail one row and two rows

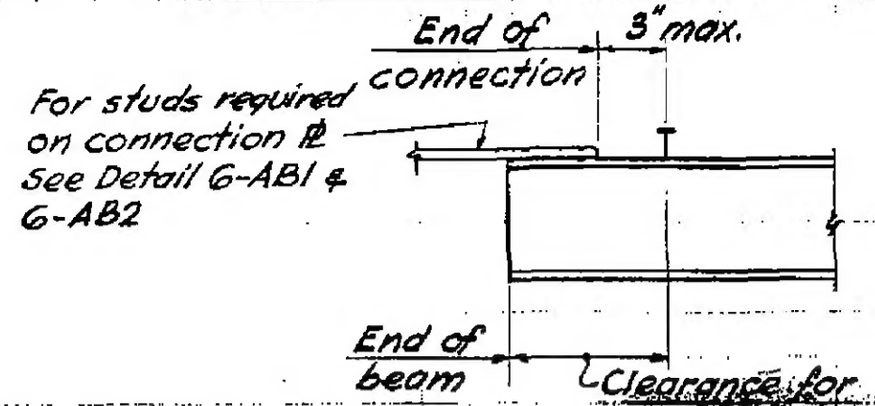


Typical Detail at connection

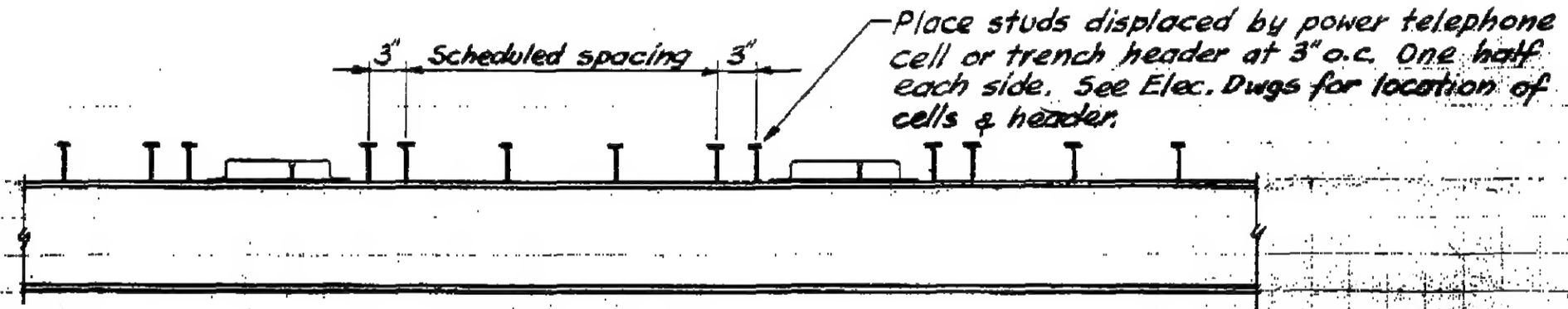


Typical Detail at beams crossed by power telephone

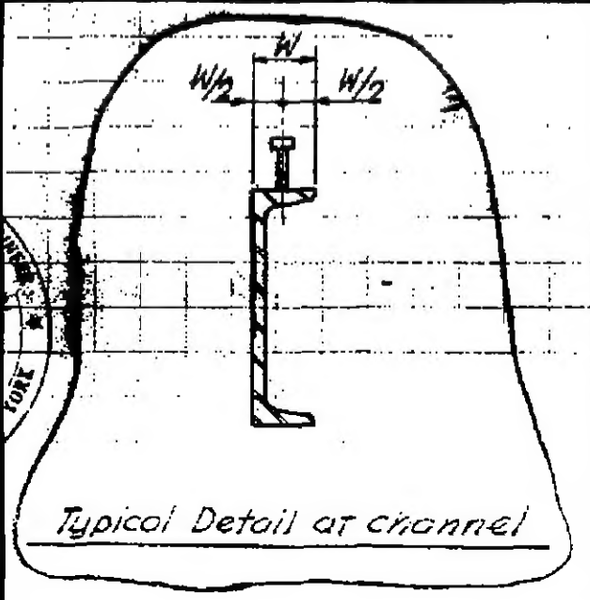


Typical Detail at channel

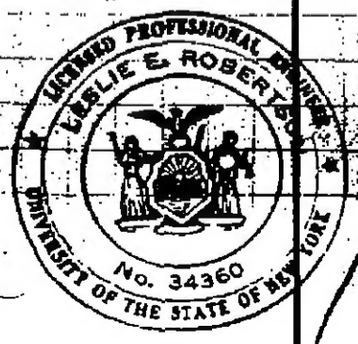


5-AB3-2

SKILLING - HELLE - CHRISTIANSEN - ROBERTSON Structural & Civil Engineers

PROJECT THE WORLD TRADE CENTER | TITLE STUDS - STANDARD PLACEMENT | DATE 11-9-67

REVISIONS

12-21-67

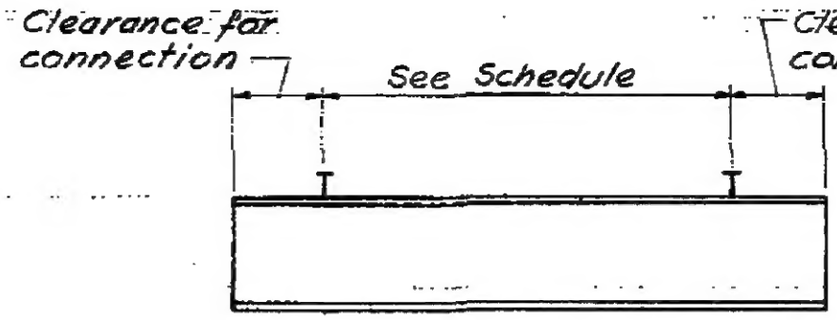


NOTE:
"A" typical for all studs unless otherwise noted.

Example: 39-$\frac{3}{4}$ x3 (See Sch. 5-AB1)

## Placement A.

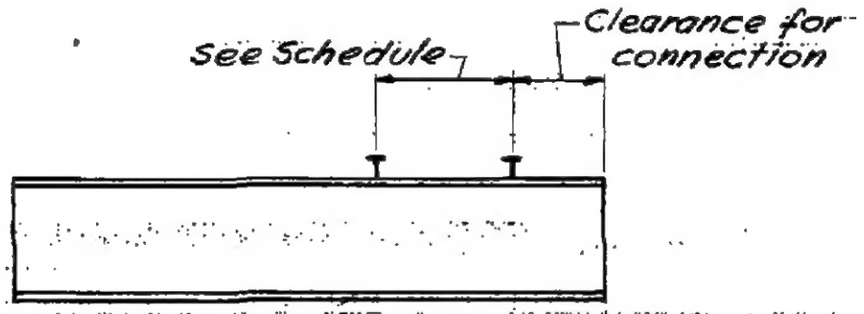


Example: 12-$\frac{3}{4}$ x3 @ A B (See Sch. 5-AB1)

## Placement B.

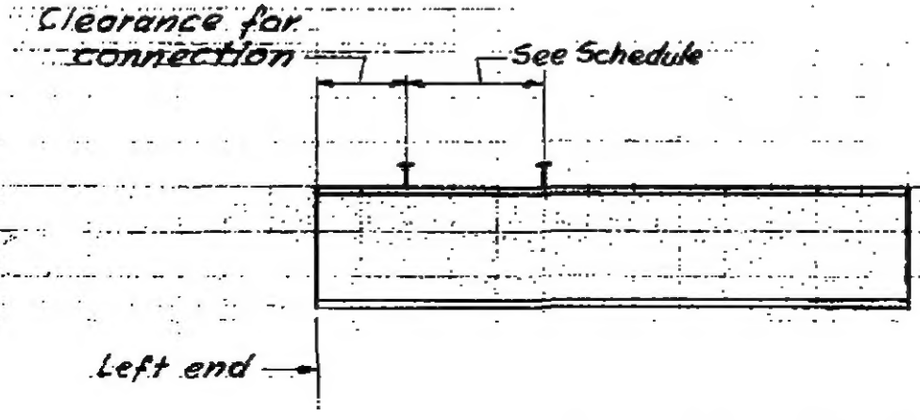


Example: 10-$\frac{3}{4}$ 3 @ 6 C (See Sch. 5-AB1)

## Placement C.

Note: For Placement B and Placement C, if spacing is not shown in Sch. 5-AB1 it shall be between 4" and 6"

LICENSED PROFESSIONAL ENGINEER LESLIE E. ROBERTSON No. 34360 UNIVERSITY OF THE STATE OF NEW YORK

5-AB3-3

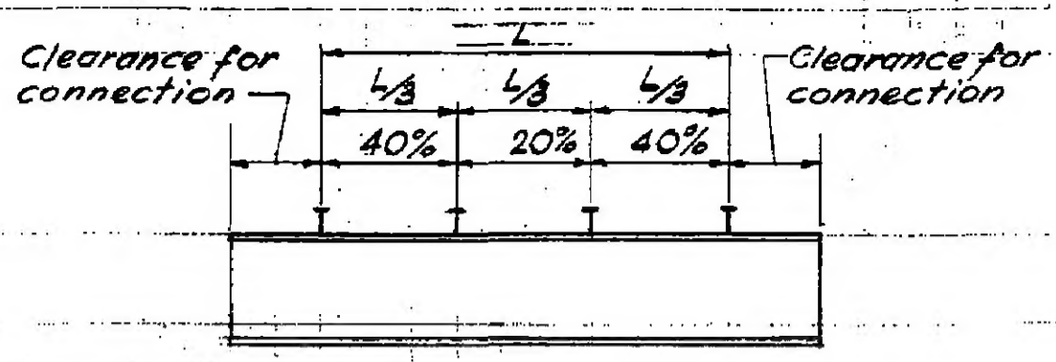


Example: 24 - $\frac{3}{4}$ x 3 D (See Sch 5-AB1)

## Placement D.

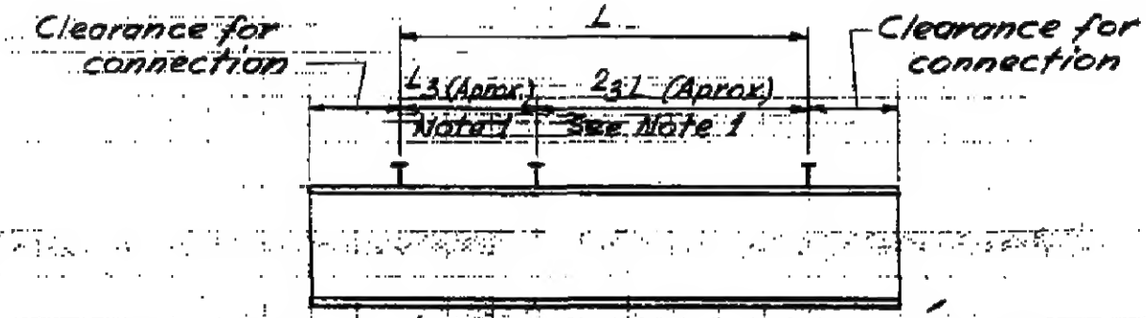


Example: 24-$\frac{3}{4}$ x 3 E (See Sch. 5-AB1)

## Placement E.

NOTE: 1
Place half of total No. of Scheduled Studs on this side.

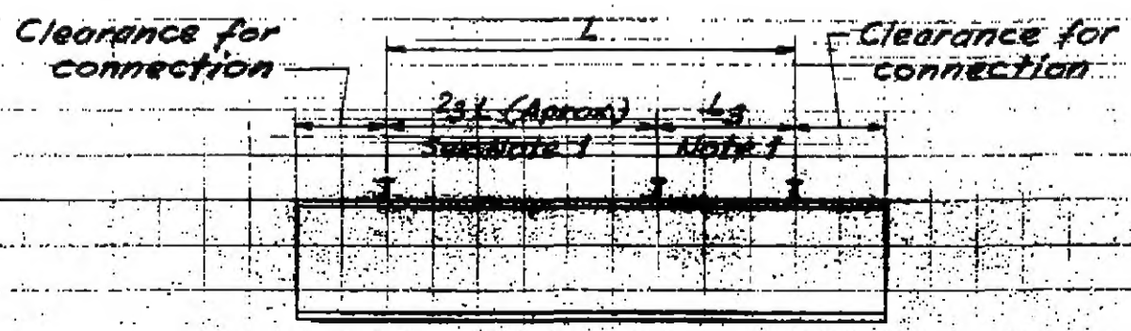


Example: 24-$\frac{3}{4}$ x 3 F (See Sch. 5-AB1)

## Placement F.

LICENSED PROFESSIONAL ENGINEER
LESLIE E. ROBERTSON
No. 34360
UNIVERSITY OF THE STATE OF NEW YORK

SKILLING - HELLE - CHRISTIANSEN - ROBERTSON — Structural & Civil Engineers

PROJECT: THE WORLD TRADE CENTER | TITLE: STUDS - STANDARD PLACEMENT | DATE: 12-21-67

REVISIONS

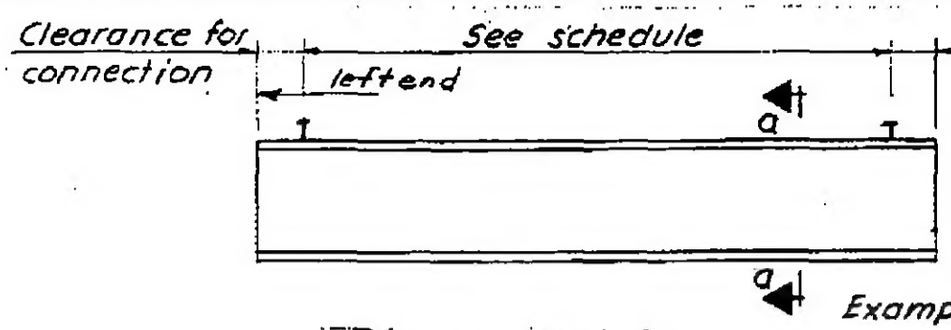


Example: 39 - 3/4 × 36
(See Sch. 5-AB1)

## Placement 6

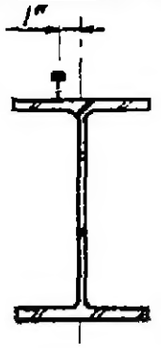


Section a-a

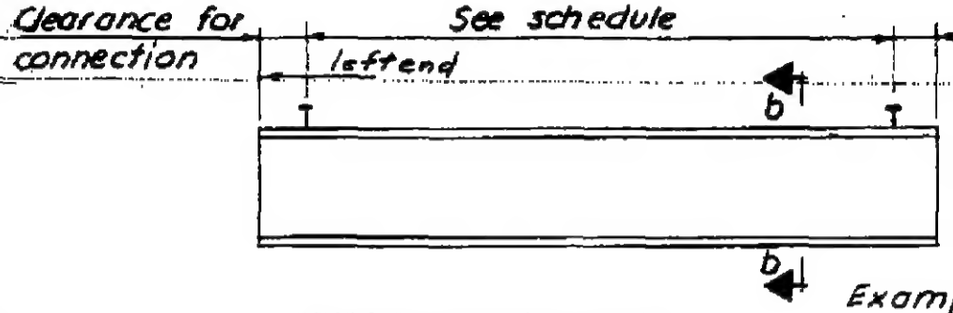


Example: 39 - 3/4 × 3H
(See Sch. 5-AB1)

## Placement H

Section b-b

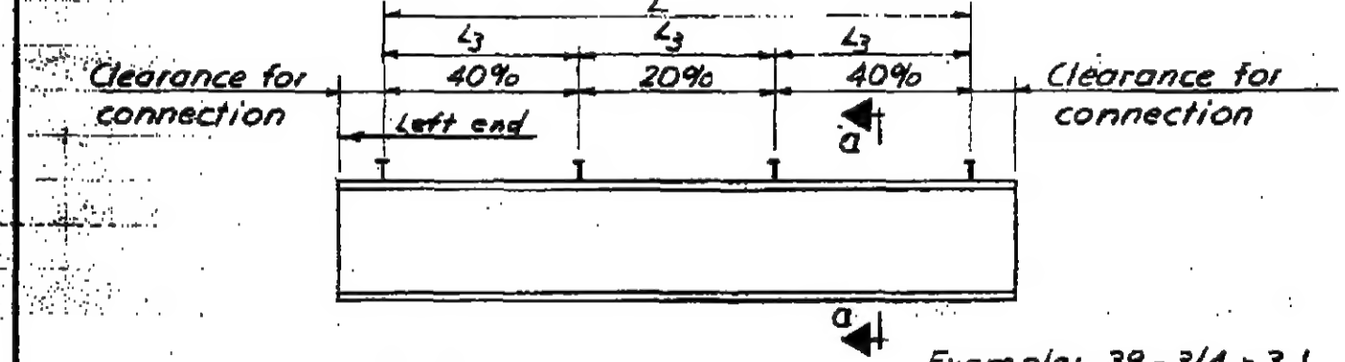


Example: 39 - 3/4 × 3J
(See Sch. 5-AB1)

## Placement J

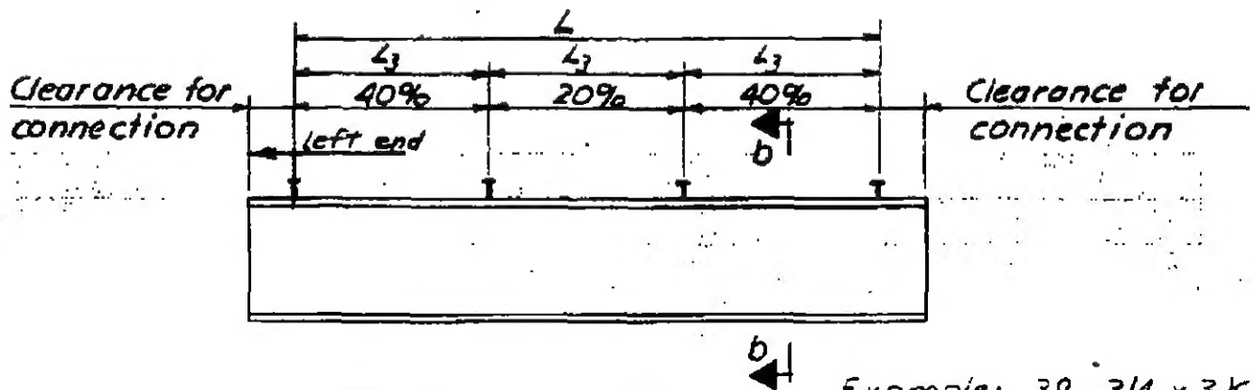


Example: 39 - 3/4 × 3K
(See Sch. 5-AB1)

## Placement K

LICENSED PROFESSIONAL ENGINEER — LESLIE E. ROBERTSON — No. 34360 — UNIVERSITY OF THE STATE OF NEW YORK